REINFORCING STEEL SCHEDULE

Bar Mark	Traffic		Traffic / Pedestrian		Traffic / Bicycle	
	Qty.	Length	Qty.	Length	Qty.	Length
TB1600	10	1350	12	1350	12	1350
TB1601	2	490	2	920	2	965
TB1602	2	480	2	860	2	860
TB1603	2	470	2	800	2	755
TB1604	2	460	2	740	2	650
TB1605	2	450	2	680	2	545
TB1606	--	--	2	1400	2	1525
TB1650	5	3030	7	3030	7	3030
TB1900	--	--	4	1040	4	1145
TB1950	--	--	5	2175	5	2325
TB1951	2	2300	2 △1	2300	2 △1	2300
TB1952	5 △1	2570	5	2570	5	2570

Note: The first two digits following the letters of the mark indicate the size of the reinforcing bar. (TB1600 = bar size #16.) All dimensions are out - to - out of bar.

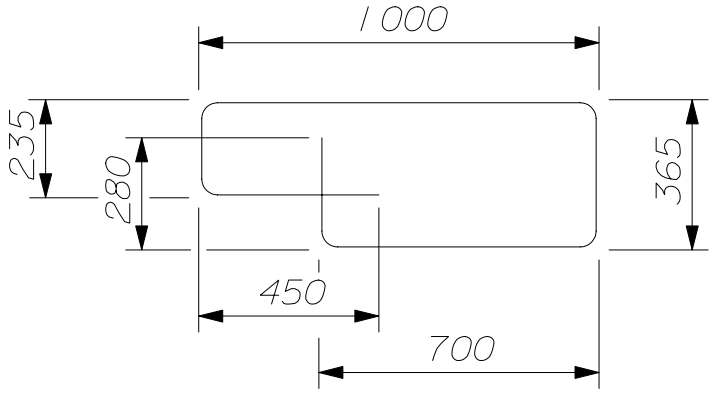

-- TB1650 --

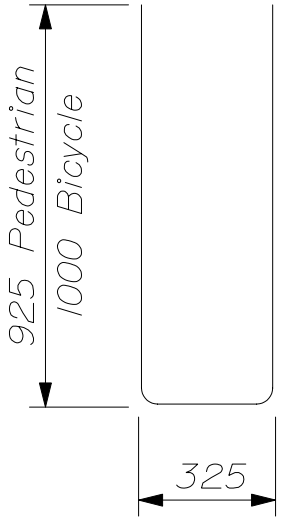

-- TB1950 --

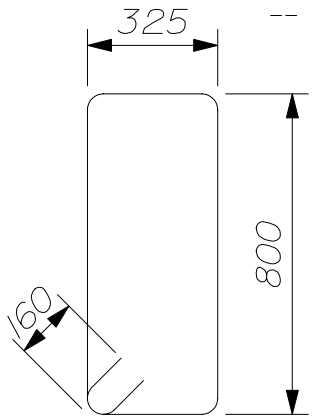

-- TB1952 --

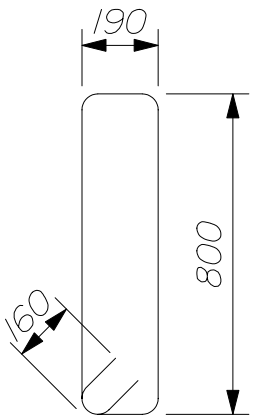

-- TB1951 --

CONCRETE TRANSITION BARRIER

526(33)

△1 Rev. 08/18/03