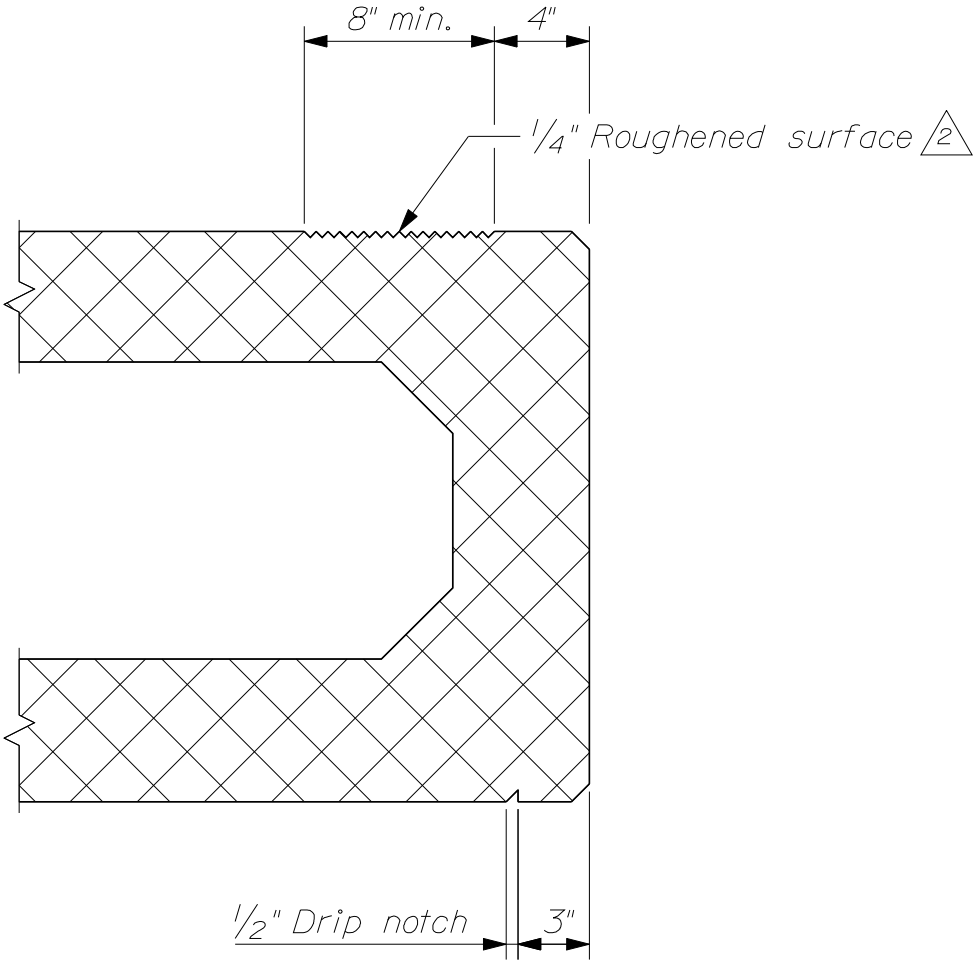

-- FASCIA DETAILS --
(Exterior units only)
(Entire top surface is roughened with reinforced C.I.P. slab)

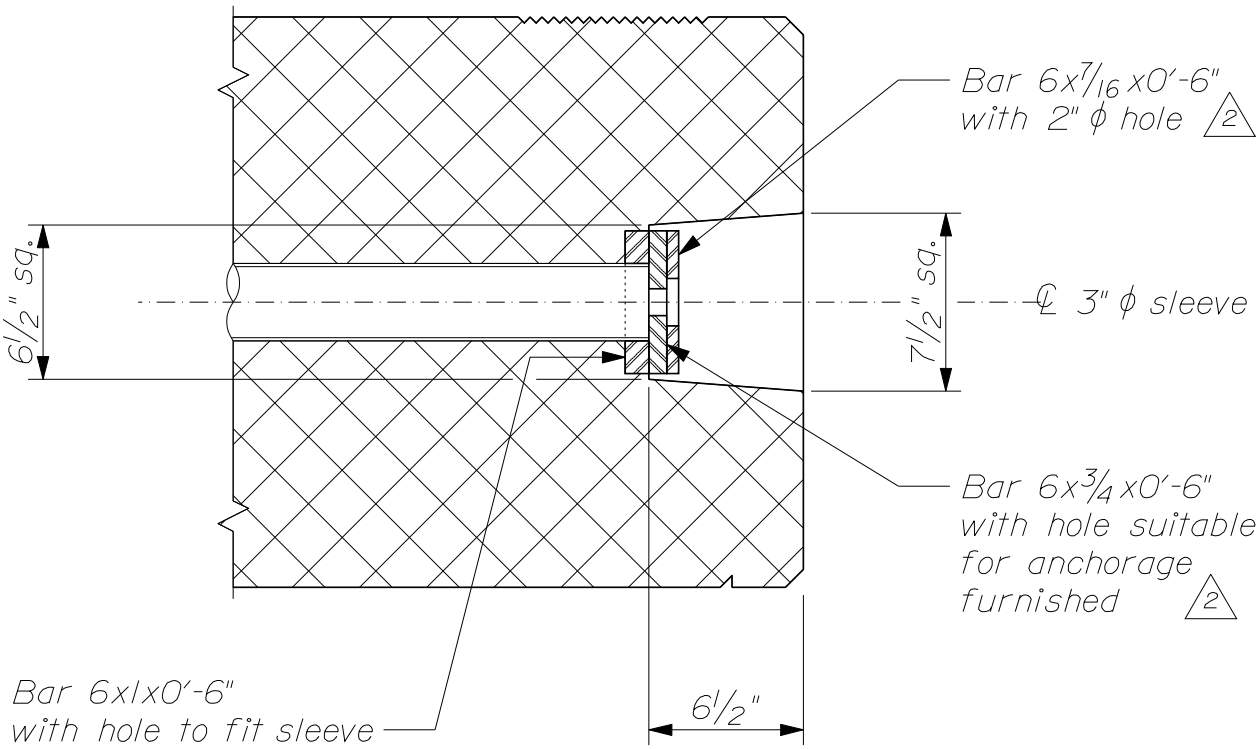

-- POST - TENSIONING BLOCK - OUT DETAIL --

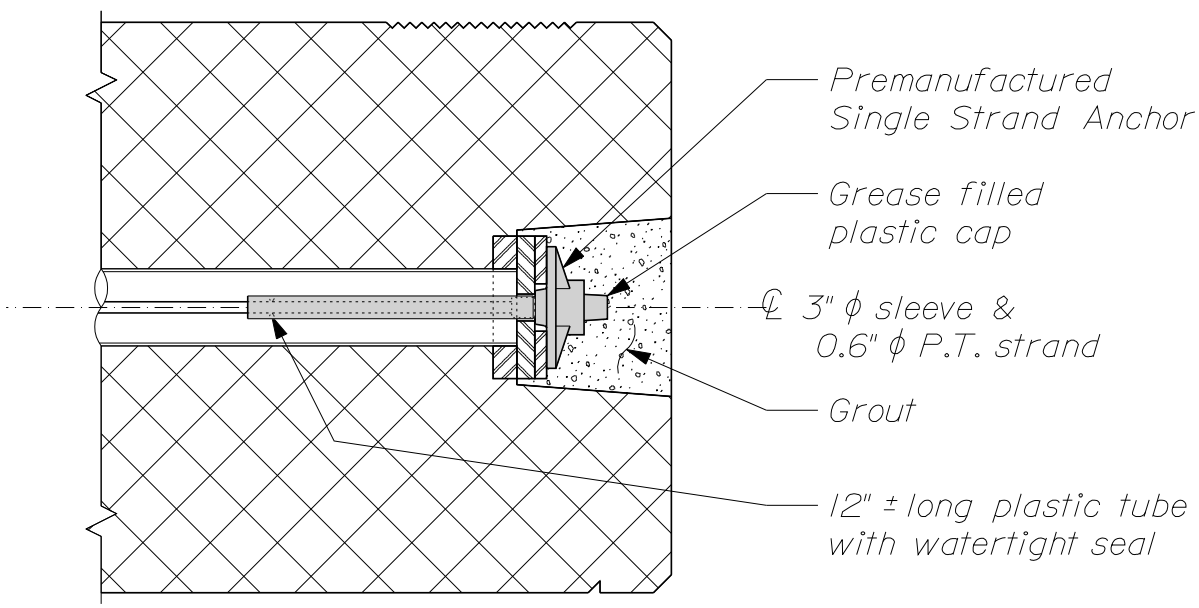

-- POST - TENSIONING ANCHORAGE DETAIL --

Supplemental
Standard Detail

PRECAST SUPERSTRUCTURE

535(05)

2 April 2008