F.H.W.A. REG. NO.	STATE	PROJECT NUMBER	SHEET NO.	TOTAL SHEETS
1	MAINE		1	12

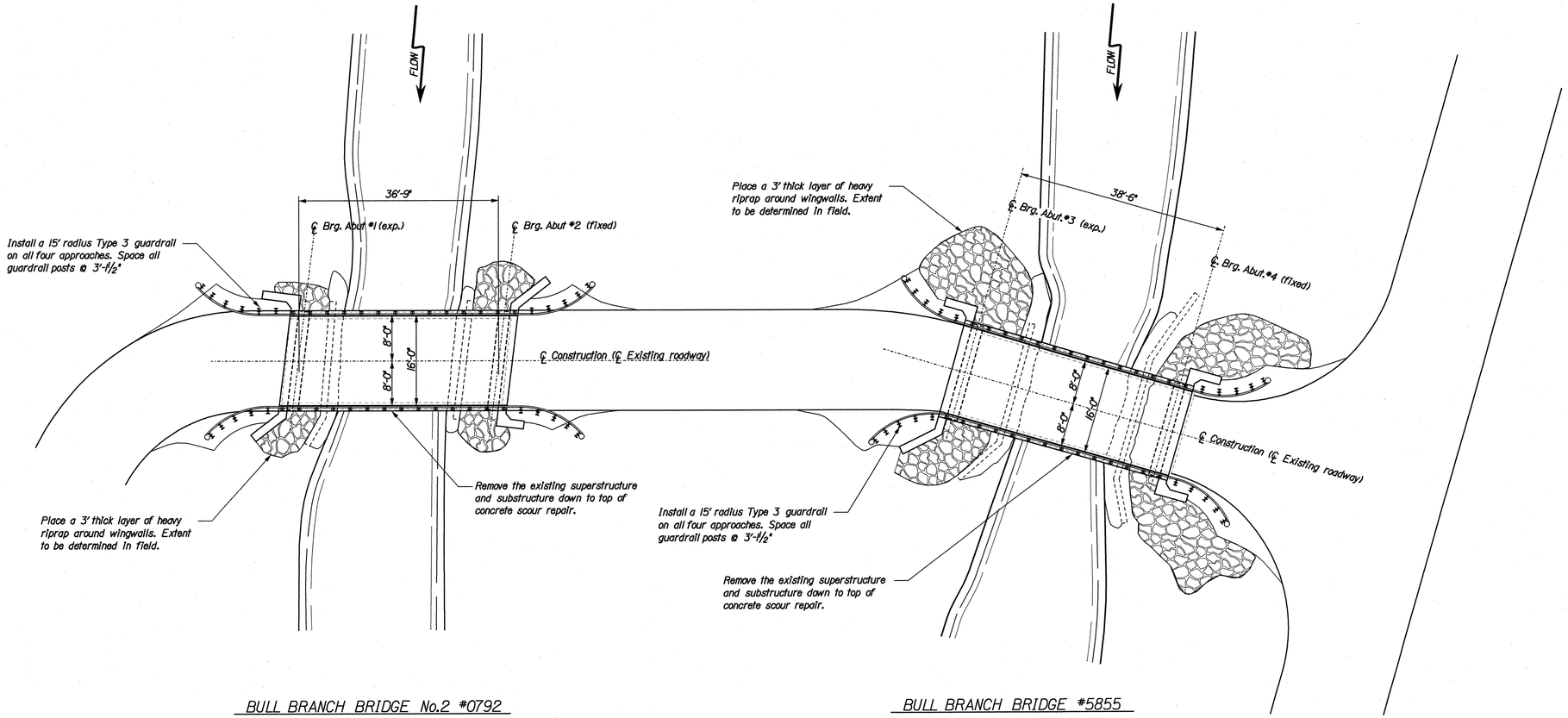

BULL BRANCH BRIDGE No.2 #0792

BULL BRANCH BRIDGE #5855

GENERAL SITE PLAN

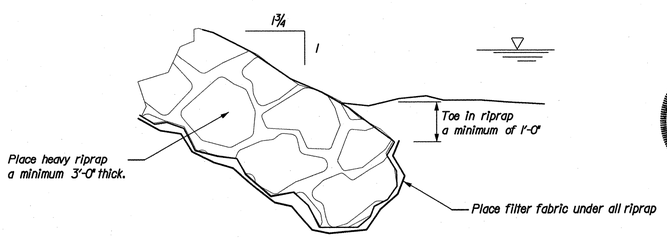

TYPICAL RIPRAP SECTION

STATE OF MAINE
William B. Doukas
8079
LICENSED
PROFESSIONAL ENGINEER

DRAWING LIST

1.....SITE PLAN/TITLE SHEET
2.....ABUTMENT NO. 1
3.....ABUTMENT NO. 2
4.....FRAMING PLAN
5.....SUPERSTRUCTURE
6.....ASSORTED DETAILS
7.....ABUTMENT NO. 3
8.....ABUTMENT NO. 4
9.....FRAMING PLAN
10.....SUPERSTRUCTURE
11.....ASSORTED DETAILS
12.....REINFORCING SCHEDULE

SPECIFICATIONS

CONCRETE: Substructure concrete shall be Class A, 3,000 psi

STRUCTURAL STEEL: Shall conform to ASTM A709, Grade 36 or 50

REINFORCING STEEL: Shall conform to ASTM A615 Grade 60

ANCHOR BOLTS: Shall conform to ASTM F1554, Grade 55
Nuts shall conform to ASTM 563, washers ASTM F436

PROJECT DESIGN ENGINEER	BY	DATE
DESIGN-DETAILED	L.Steiner	4/2010
CHECKED		
REVISIONS		
FIELD CHANGES		

PLANS

Filename: ...\rileytwp0792.dgn

STATE OF MAINE
DEPARTMENT OF TRANSPORTATION

BULL BRANCH BRIDGES OVER BULL BRANCH STREAM IN RILEY TWP. OXFORD COUNTY

SITE PLAN VIEW

F.H.W.A. REG. NO.	STATE	PROJECT NUMBER	SHEET NO.	TOTAL SHEETS
1	MAINE	Bridge #0792	2	12

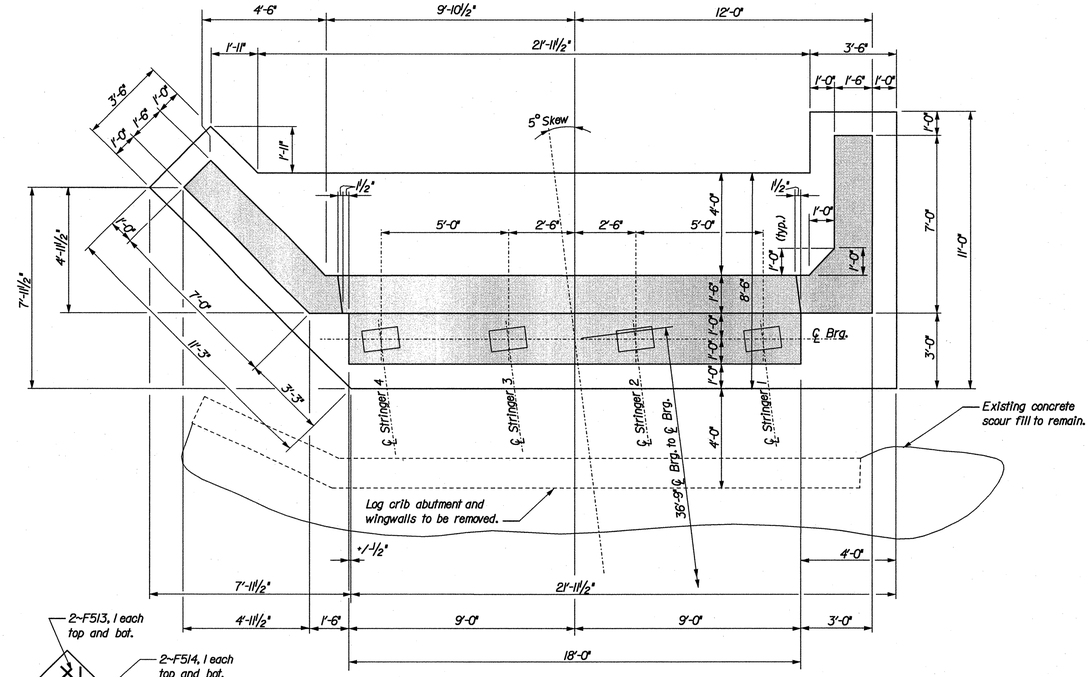

ABUTMENT NO. 1 PLAN VIEW

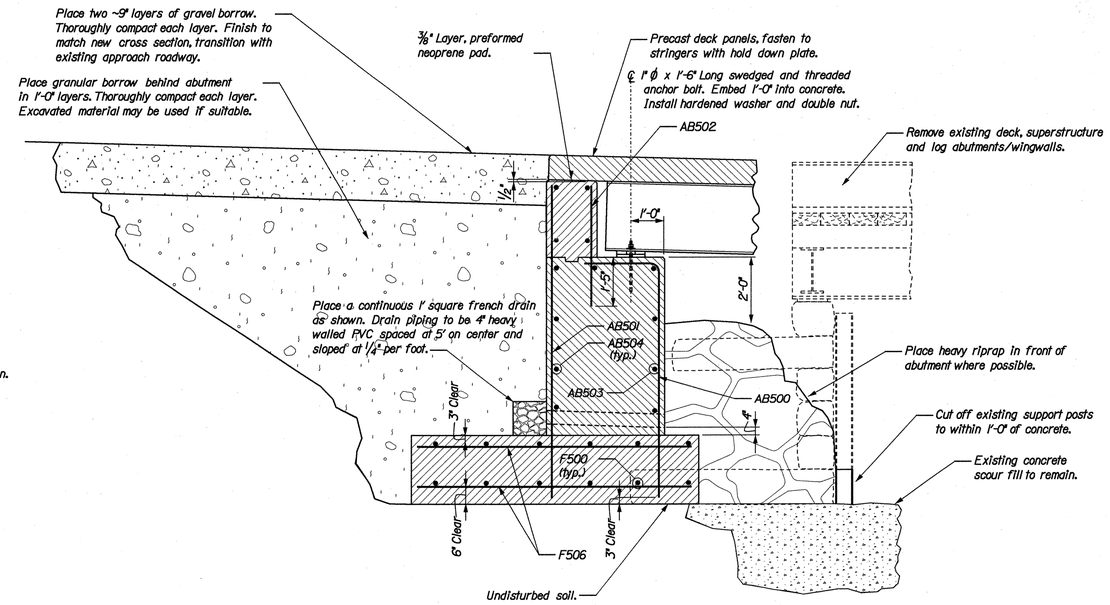

TYPICAL SECTION THROUGH ABUTMENT

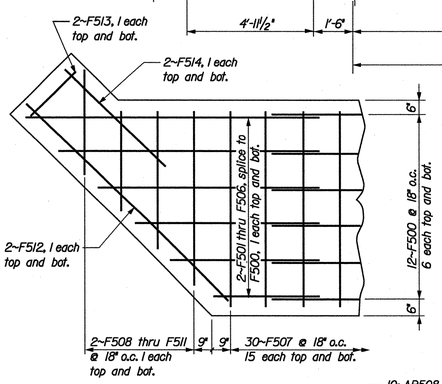

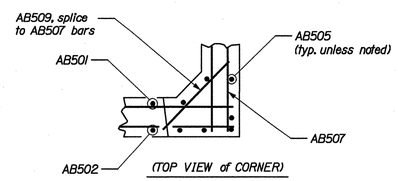

(TOP VIEW of CORNER)

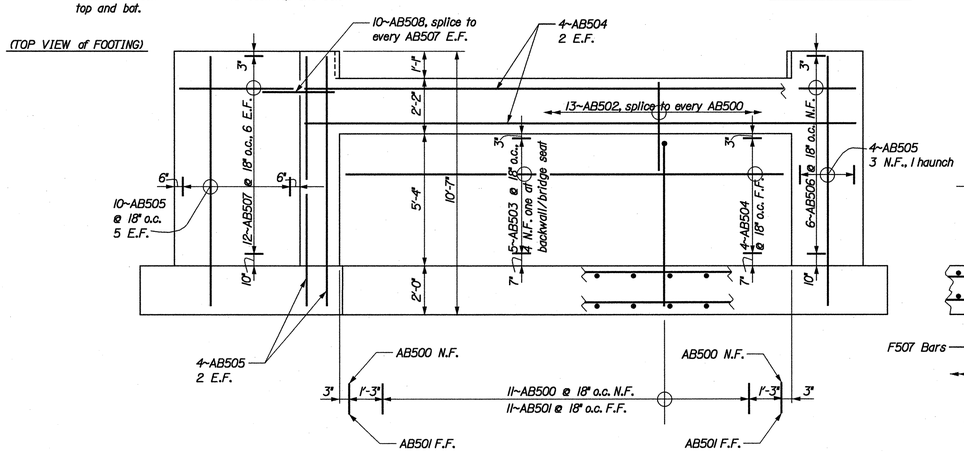

ABUTMENT NO. 1 ELEVATION VIEW

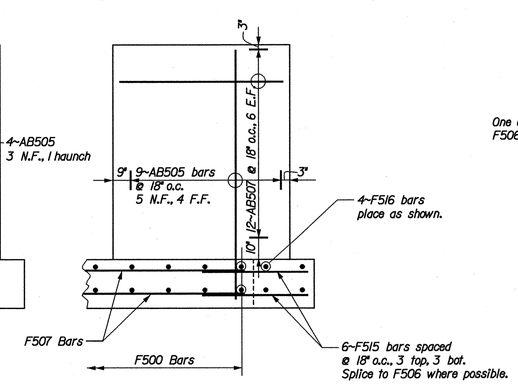

(SIDE VIEW of RIGHT WINGWALL)

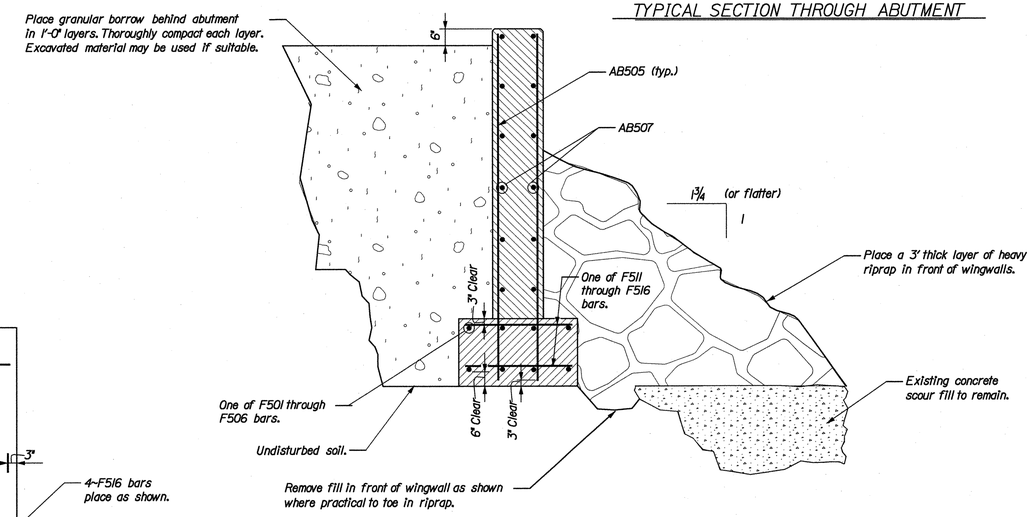

TYPICAL SECTION THROUGH WINGWALL

LEGEND

E.F. .....Each Face
N.F. .....Near Face
F.F. .....Far Face

Section view of new concrete

Section view of existing concrete

STATE OF MAINE
DEPARTMENT OF TRANSPORTATION

BULL BRANCH No. 2
OVER
BULL BRANCH STREAM
IN
RILEY TWP.
OXFORD COUNTY

ABUTMENT NO. 1

PROJECT DESIGN ENGINEER	BY	DATE
DESIGN-DETAILED	LSBenner	4/2010
CHECKED		
REVISIONS		
FIELD CHANGES		

PLANS

Filename: ...\rileytwp0792.dgn

F.H.W.A. REG. NO.	STATE	PROJECT NUMBER	SHEET NO.	TOTAL SHEETS
1	MAINE	Bridge #0792	3	12

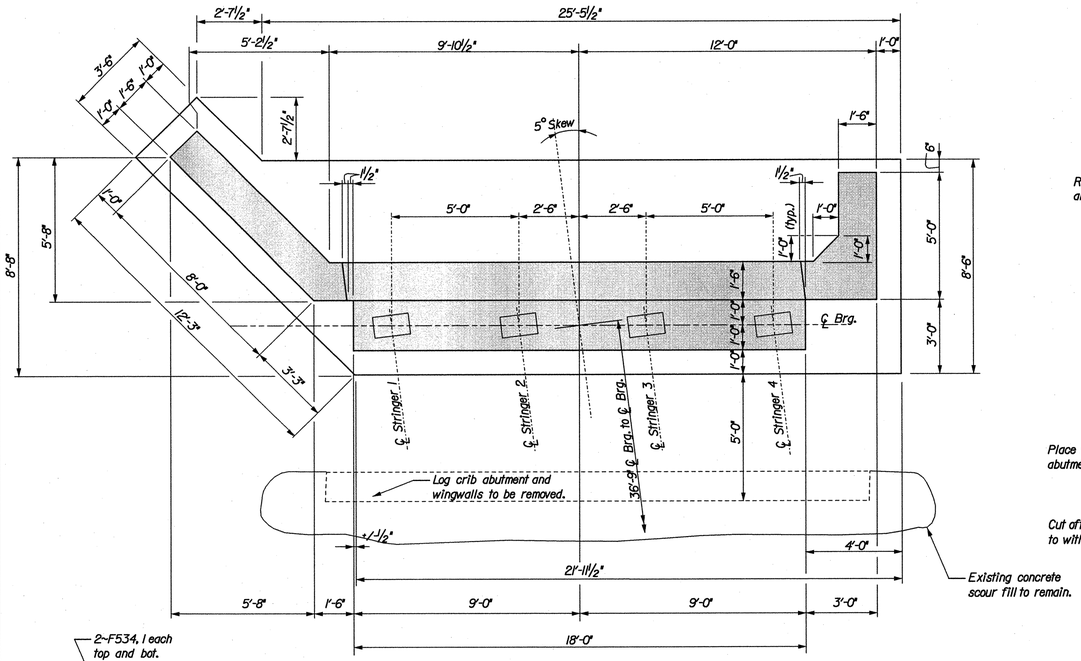

ABUTMENT NO. 2 PLAN VIEW

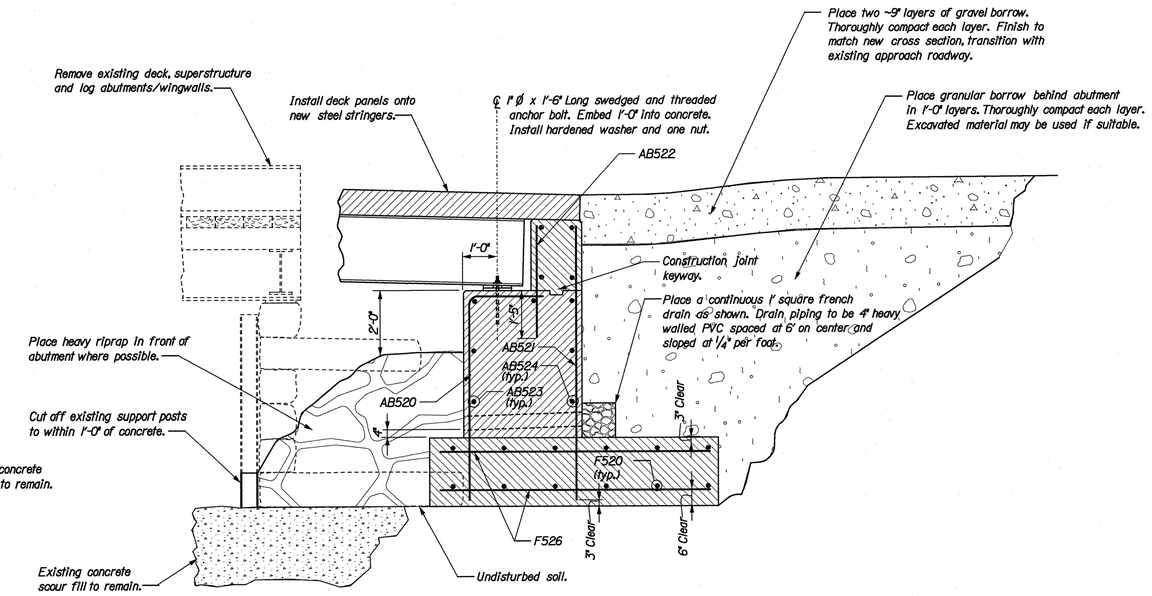

TYPICAL SECTION THROUGH ABUTMENT

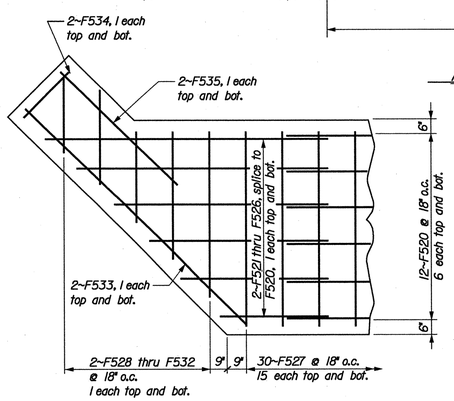

(TOP VIEW of FOOTING)

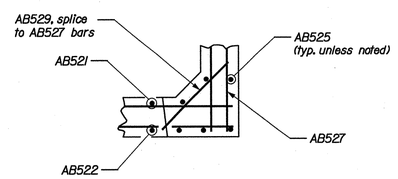

(TOP VIEW of CORNER)

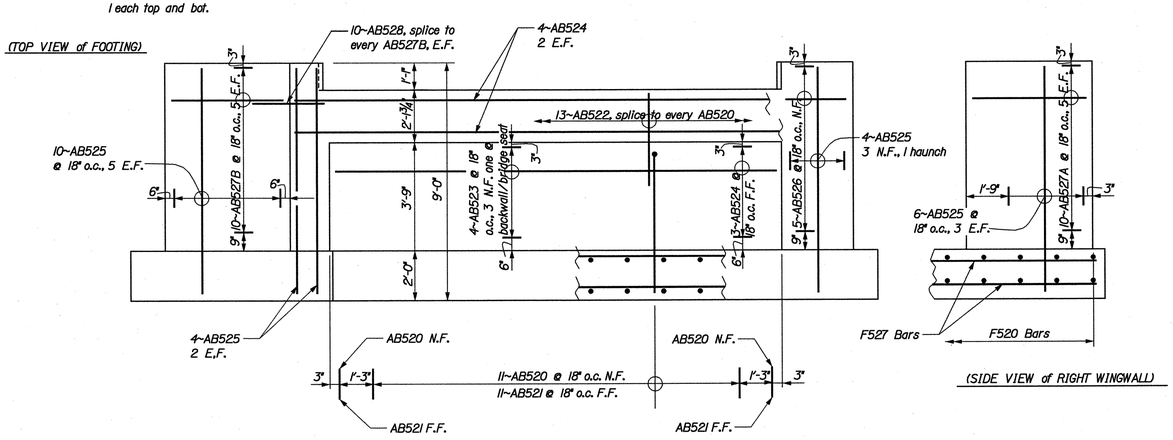

ABUTMENT NO. 2 ELEVATION VIEW

(SIDE VIEW of RIGHT WINGWALL)

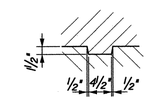

CONSTRUCTION KEYWAY

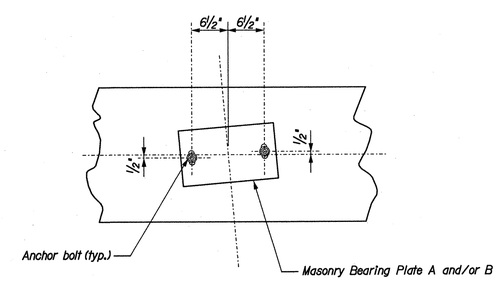

BEARING PLAN VIEW

LEGEND

E.F. .....Each Face
N.F. .....Near Face
F.F. .....Far Face

Section view of new concrete

Section view of existing concrete

PROJECT DESIGN ENGINEER	BY	DATE
DESIGN-DETAILED	L.Stenner	2/2010
CHECKED		
REVISIONS		
FIELD CHANGES		

PLANS

Filename: ...\rileytwp0792.dgn

STATE OF MAINE
DEPARTMENT OF TRANSPORTATION

BULL BRANCH No. 2 OVER BULL BRANCH STREAM IN RILEY TWP. OXFORD COUNTY

ABUTMENT NO. 2

F.H.W.A. REG. NO.	STATE	PROJECT NUMBER	SHEET NO.	TOTAL SHEETS
1	MAINE	Bridge #0792	4	12

Date:4/23/2010

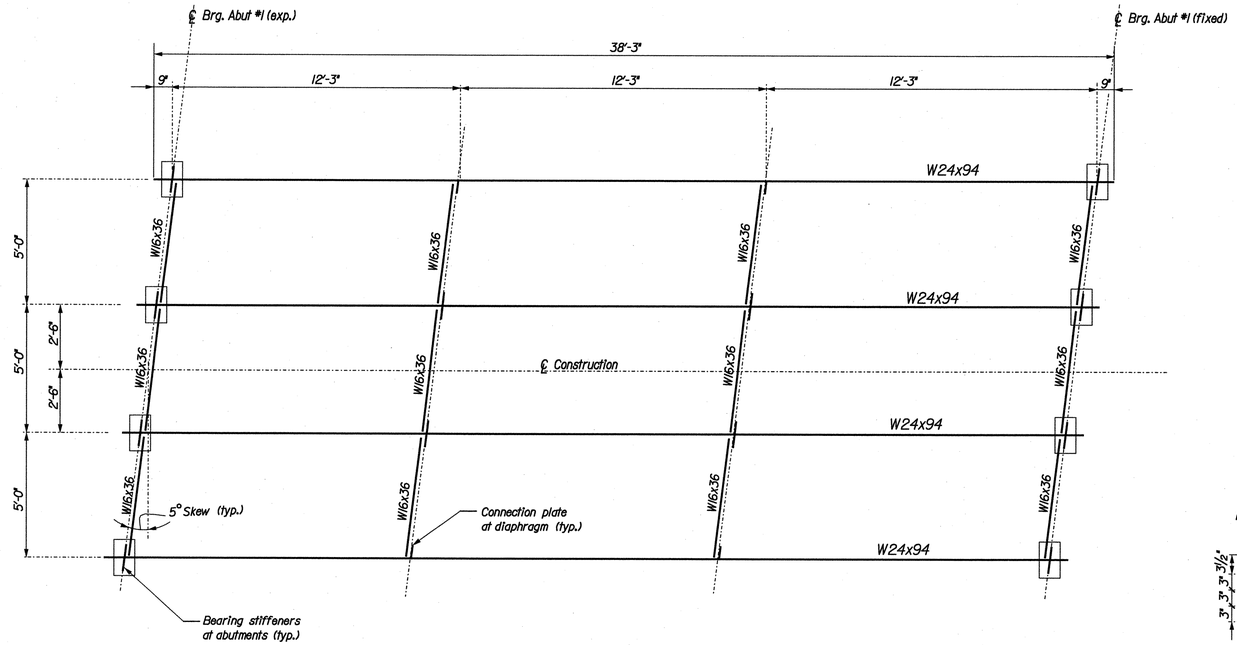

FRAMING PLAN

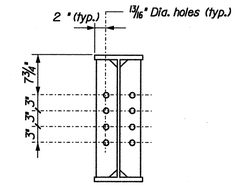

BEARING STIFFENER HOLE LAYOUT

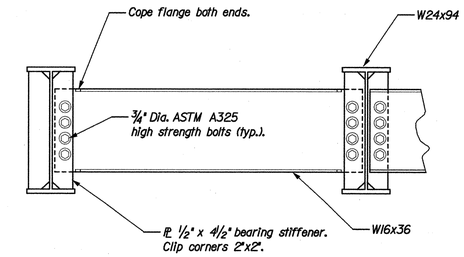

DIAPHRAGM ELEVATION

(At abutment bearings)

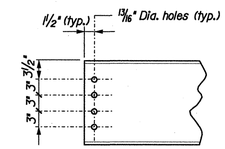

DIAPHRAGM (W16x36) HOLE LAYOUT

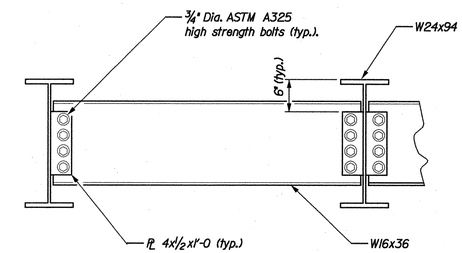

DIAPHRAGM ELEVATION

(At intermediate diaphragms)

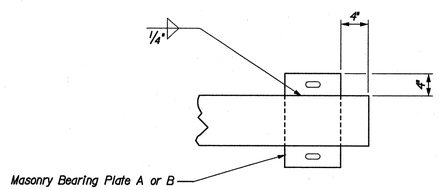

TYPICAL BEAM END

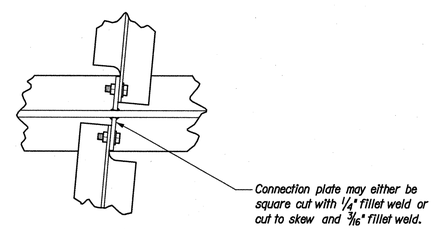

DIAPHRAGM CONNECTION

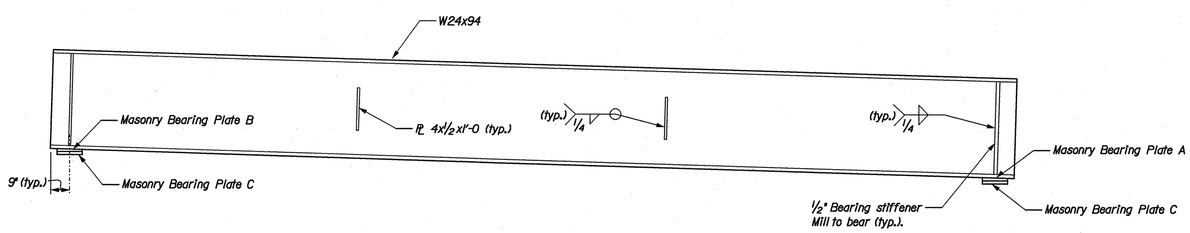

STRINGER ELEVATION

GENERAL STEEL NOTES

1...W24x94 to be Charpy V notch tested with values of 15 foot/lbs. @ 40 degrees F, frequency H.

2...Fabrication shall conform to Section 504 of Maine Dept. of Transportation Specification Revision of December 2002.

3...All steel and hardware to be hot dipped galvanized in accordance with ASTM A123 and A153. Steel substrate shall be abrasive blast cleaned to a minimum of SSPC SP6/NACE 3 prior to galvanizing.

4...Beams to be fabricated with assumed natural camber up.

5...Material shall be properly packaged/labeled in order to distinguish Bull Branch bridge and Bull Branch No. 2 bridge.

6...Shop drawings will be required. Welding procedure specifications shall be submitted prior to fabrication.

7...Rubber/neoprene pads shall be placed under stub guardrail posts, under deck panels on top of both stringer flanges and backwall as well as under bearings.

8...Add 5% to hardware quantity needed including washers and nuts.

PROJECT DESIGN ENGINEER	BY	DATE
DESIGN-DETAILED	B. Doukas	2/2010
CHECKED	L.S.Benner	
REVISIONS		
FIELD CHANGES		

PLANS

STATE OF MAINE
DEPARTMENT OF TRANSPORTATION

BULL BRANCH No. 2
OVER
BULL BRANCH STREAM
IN
RILEY TWP.
OXFORD COUNTY

FRAMING PLAN

F.H.W.A. REG. NO.	STATE	PROJECT NUMBER	SHEET NO.	TOTAL SHEETS
1	MAINE	Bridge #0792	5	12

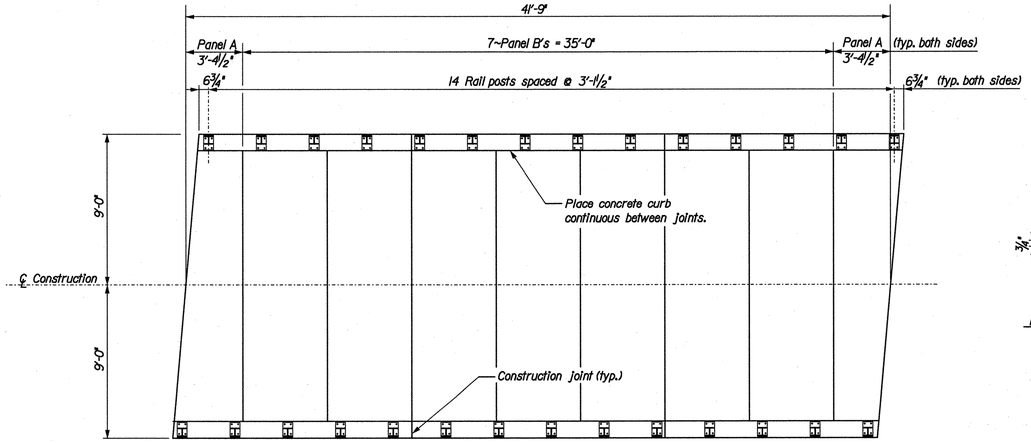

PLAN VIEW

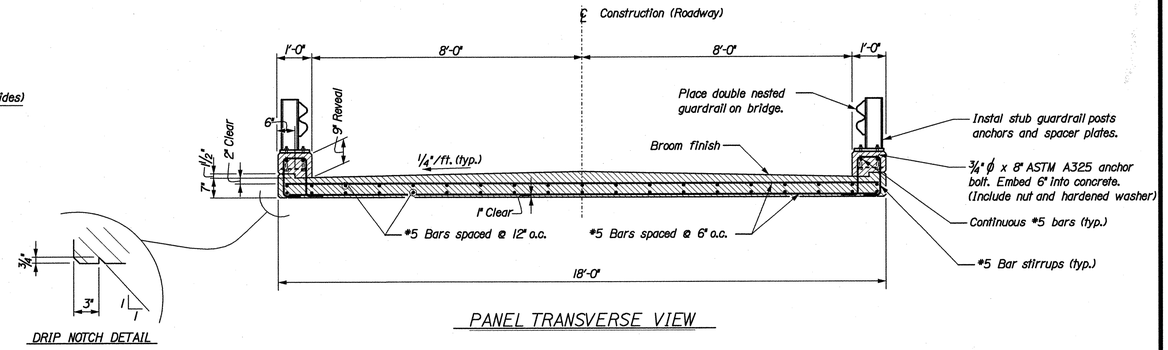

DRIP NOTCH DETAIL

PANEL TRANSVERSE VIEW

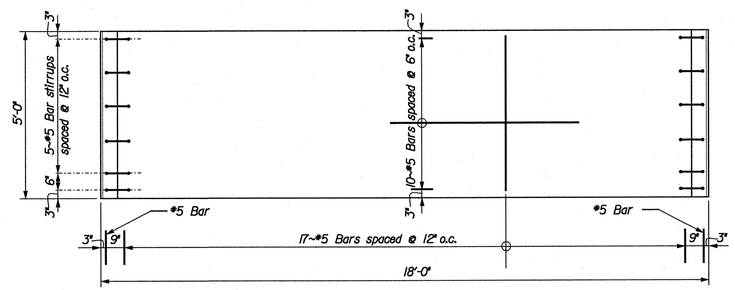

PANEL "B" TOP VIEW

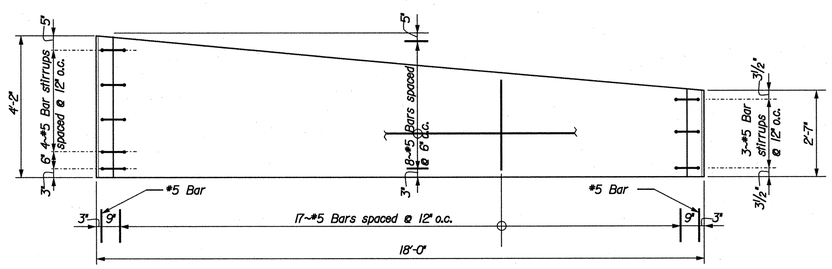

PANEL "A" TOP VIEW

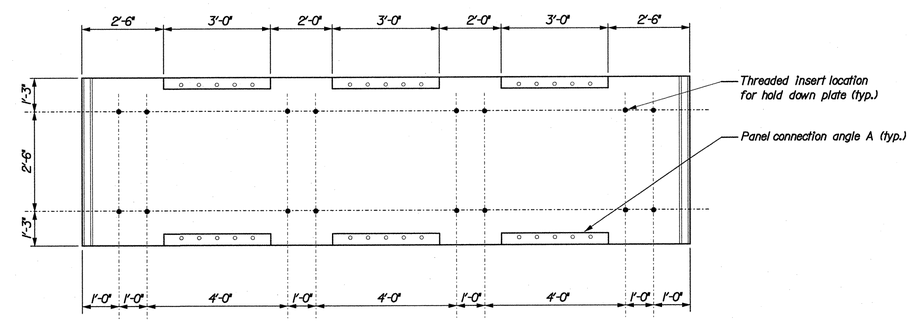

PANEL "B" BOTTOM VIEW

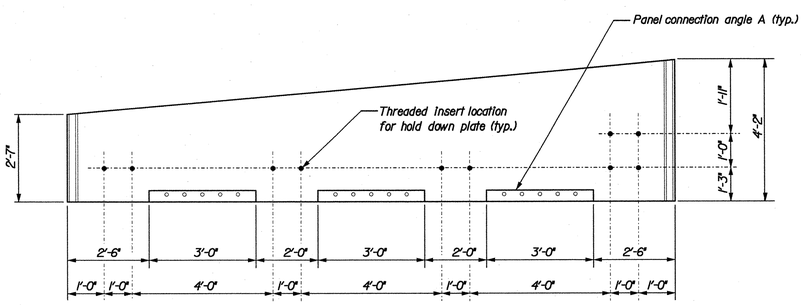

PANEL "A" BOTTOM VIEW

LEGEND

Section view of new concrete

GENERAL NOTES

1...Chamfer all exposed edges of concrete ¾"

2...All reinforcing steel shall have a minimum of 2" of clearance.

3...Reinforcing steel splice lengths for #5 bar is 1'-9".

4...All steel material shall be hot-dipped galvanized.

STATE OF MAINE
DEPARTMENT OF TRANSPORTATION

BULL BRANCH
OVER
BULL BRANCH STREAM
IN
RILEY TWP.
OXFORD COUNTY

SUPERSTRUCTURE

PROJECT DESIGN ENGINEER		BY	DATE
PLANS	DESIGN-DETAILED	Ben Foster	10/2008
	CHECKED	L.Sbenner	
	REVISIONS		
	FIELD CHANGES		

Filename: ...\rileytwp0792.dgn

Username: Lewis.Benner

F.H.W.A. REG. NO.	STATE	PROJECT NUMBER	SHEET NO.	TOTAL SHEETS
1	MAINE	Bridge #0792	6	12

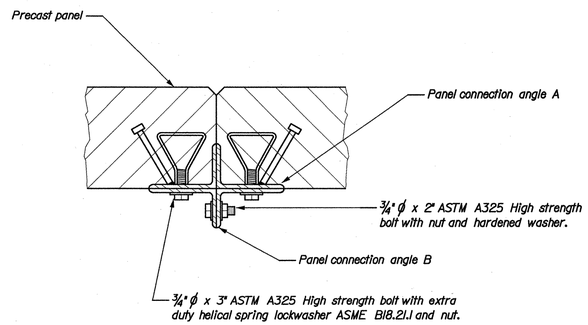

TYPICAL SECTION AT PANEL ENDS

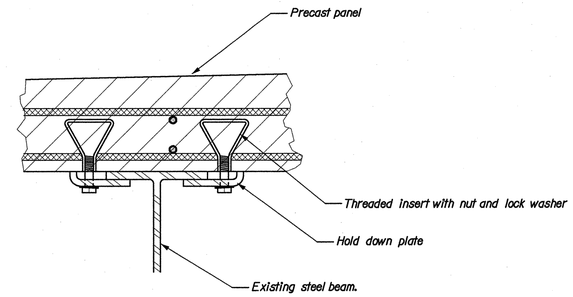

HOLD DOWN PLATE CONNECTION

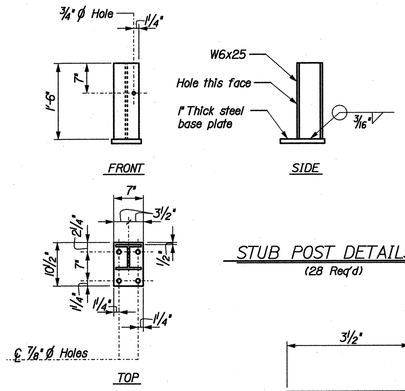

STUB POST DETAILS
(28 Req'd)

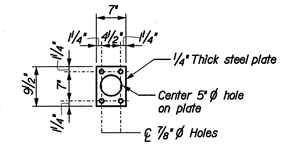

SPACER PLATE DETAIL
(28 Req'd)

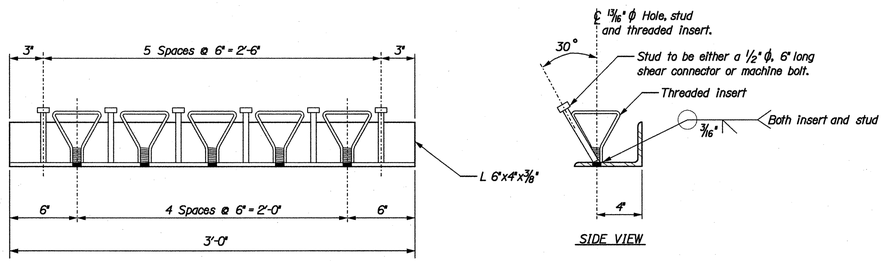

PANEL CONNECTION ANGLE A

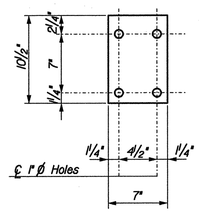

NEOPRENE/RUBBER POST PAD
(28 Req'd)

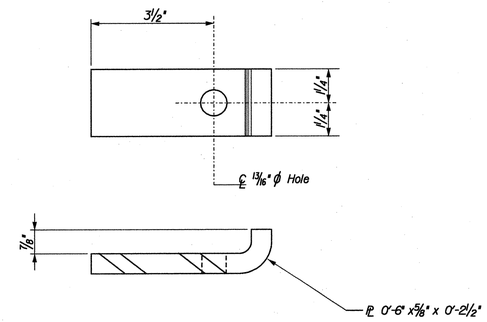

HOLD DOWN PLATE DETAIL

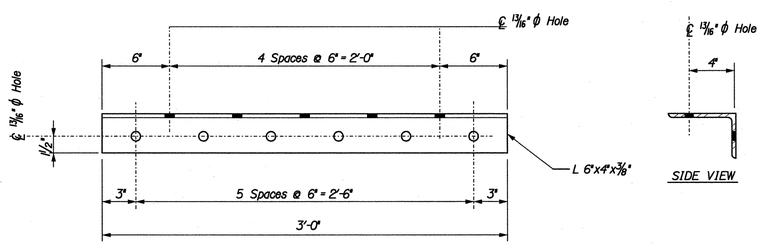

PANEL CONNECTION ANGLE B

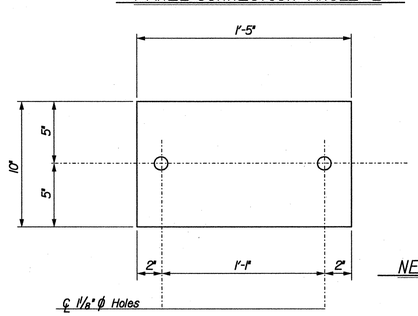

NEOPRENE/RUBBER PAD
(8 Req'd)

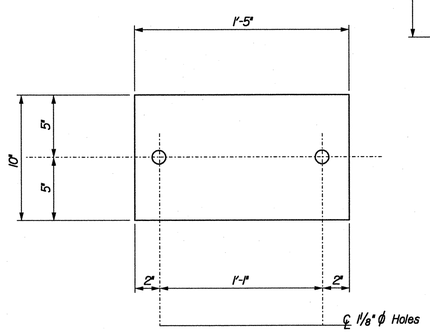

BEARING PLATE C
(8 Req'd)

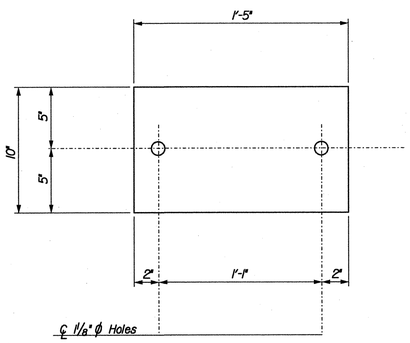

BEARING PLATE A
(4 Req'd)

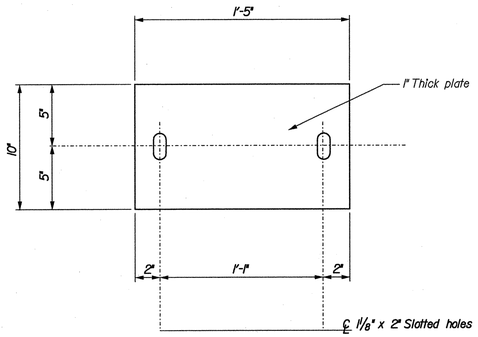

BEARING PLATE B
(4 Req'd)

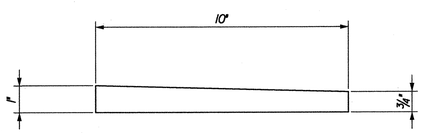

PROFILE for BEARING PLATES A & B

STATE OF MAINE
DEPARTMENT OF TRANSPORTATION

BULL BRANCH
OVER
BULL BRANCH STREAM
IN
RILEY TWP.
OXFORD COUNTY

ASSORTED DETAILS

PROJECT DESIGN ENGINEER	BY	DATE
DESIGN-DETAILED	Ben Foster	1.S.Benner	12/2/2008
CHECKED			
REVISIONS			
FIELD CHANGES			

PLANS

Filename: ...\rileytwp0792.dgn

Username: Lewis.Benner

F.H.W.A. REG. NO.	STATE	PROJECT NUMBER	SHEET NO.	TOTAL SHEETS
1	MAINE	Bridge #5855	7	12

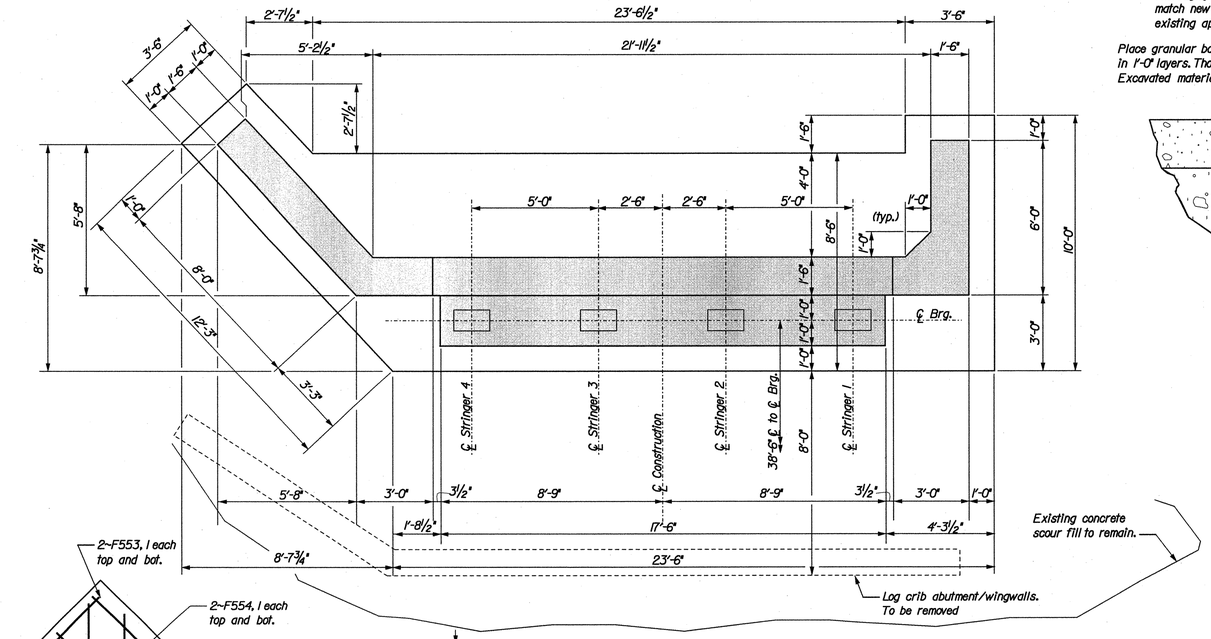

ABUTMENT NO. 3 PLAN VIEW

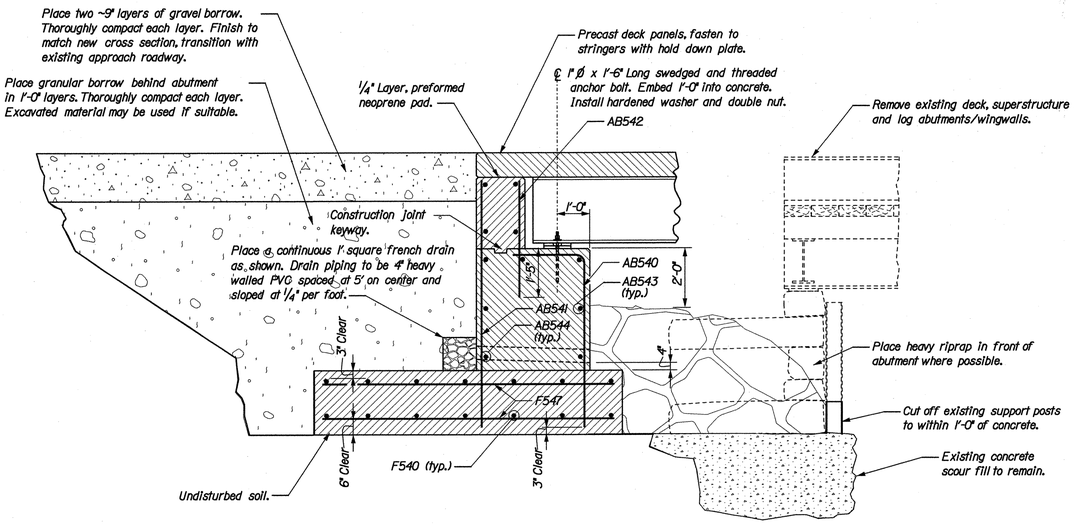

TYPICAL SECTION THROUGH ABUTMENT

(TOP VIEW of FOOTING)

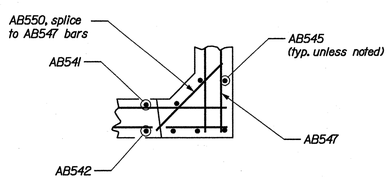

(TOP VIEW of CORNER)

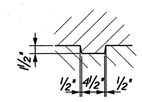

CONSTRUCTION KEYWAY

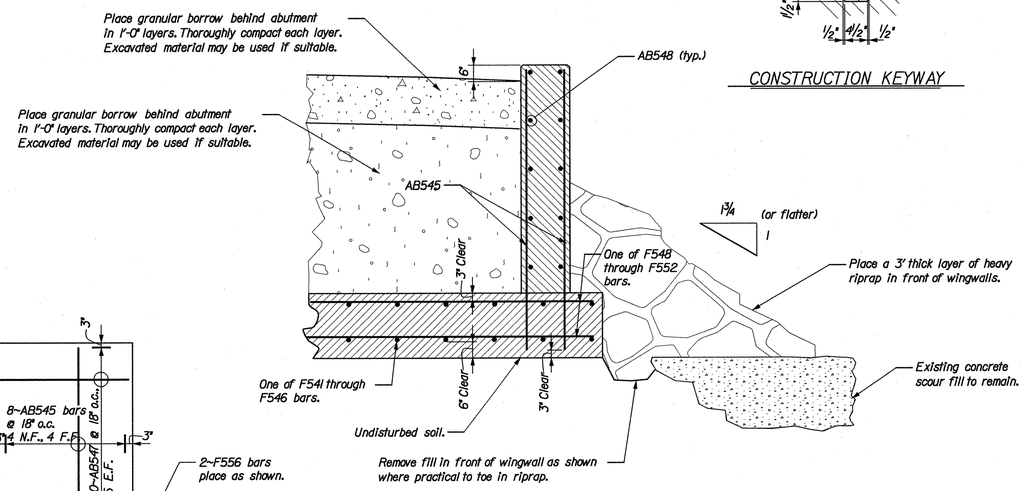

TYPICAL SECTION THROUGH WINGWALL

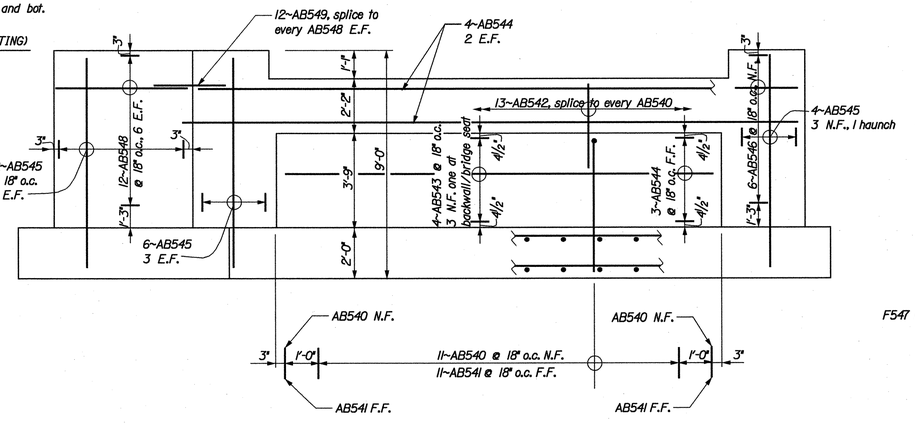

ABUTMENT NO. 3 ELEVATION VIEW

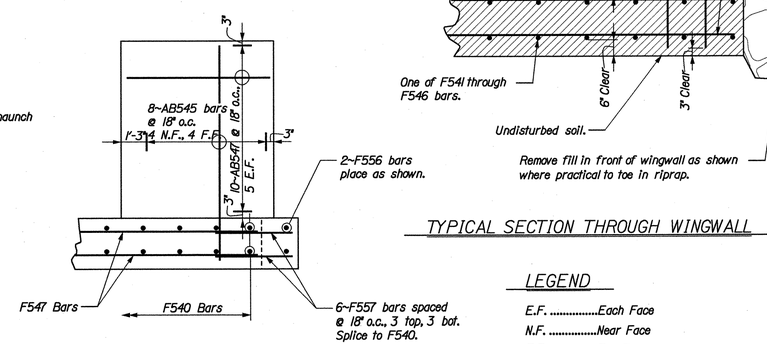

(SIDE VIEW of RIGHT WINGWALL)

LEGEND

E.F. .....Each Face
N.F. .....Near Face
F.F. .....Far Face

Section view of new concrete

Section view of existing concrete

PROJECT DESIGN ENGINEER	BY	DATE
DESIGN-DETAILED	LSBerner	2/2010
CHECKED		
REVISIONS		
FIELD CHANGES		

PLANS

Filename: ...\rileytwp0792.dgn

STATE OF MAINE
DEPARTMENT OF TRANSPORTATION

BULL BRANCH
OVER
BULL BRANCH STREAM
IN
RILEY TWP.
OXFORD COUNTY

ABUTMENT NO. 3

F.H.W.A. REG. NO.	STATE	PROJECT NUMBER	SHEET NO.	TOTAL SHEETS
1	MAINE	Bridge #5855	8	12

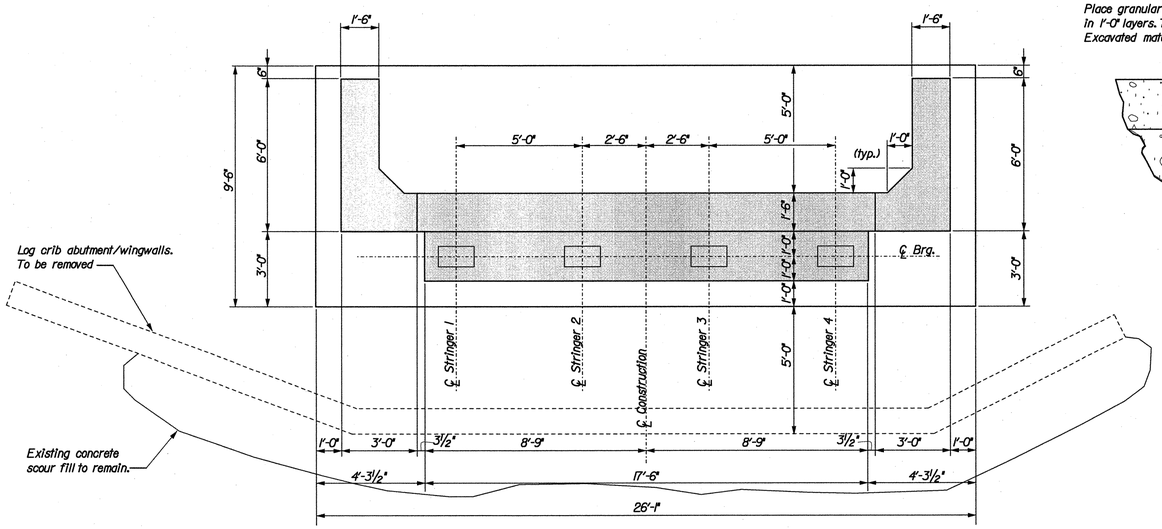

ABUTMENT NO. 4 PLAN VIEW

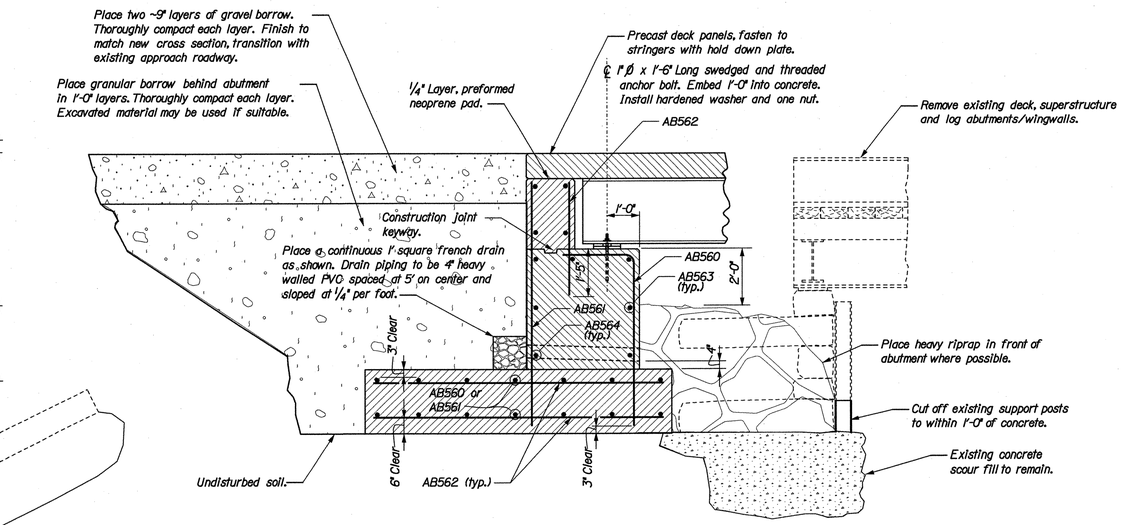

TYPICAL SECTION THROUGH ABUTMENT

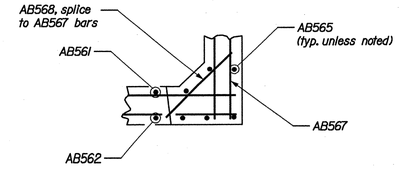

(TOP VIEW of CORNER)

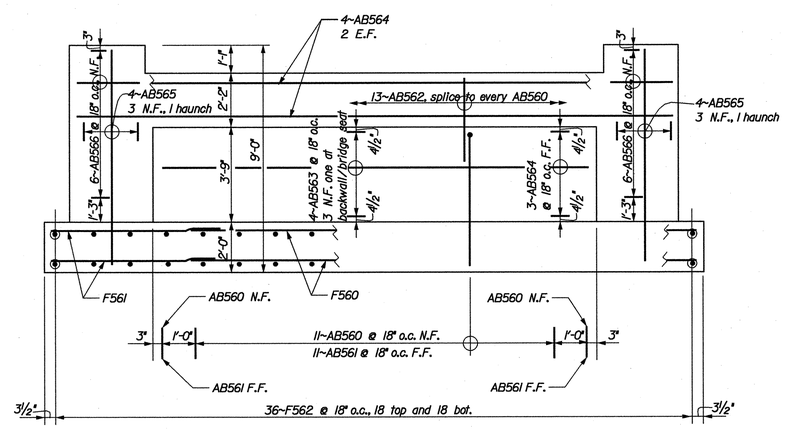

ABUTMENT NO. 4 ELEVATION VIEW

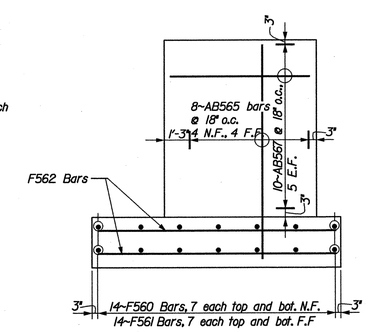

(SIDE VIEW of RIGHT WINGWALL)
(Left wingwall is similar)

LEGEND

E.F. .....Each Face
N.F. .....Near Face
F.F. .....Far Face

Section view of new concrete

Section view of existing concrete

PROJECT DESIGN ENGINEER	BY	DATE
DESIGN-DETAILED	LSBenner	2/2010
CHECKED		
REVISIONS		
FIELD CHANGES		

PLANS

Filename: ...\rileytwp0792.dgn

STATE OF MAINE
DEPARTMENT OF TRANSPORTATION

BULL BRANCH OVER BULL BRANCH STREAM IN RILEY TWP. OXFORD COUNTY

ABUTMENT NO. 4

F.H.W.A. REG. NO.	STATE	PROJECT NUMBER	SHEET NO.	TOTAL SHEETS
1	MAINE	Bridge #5855	9	12

Date:4/23/2010

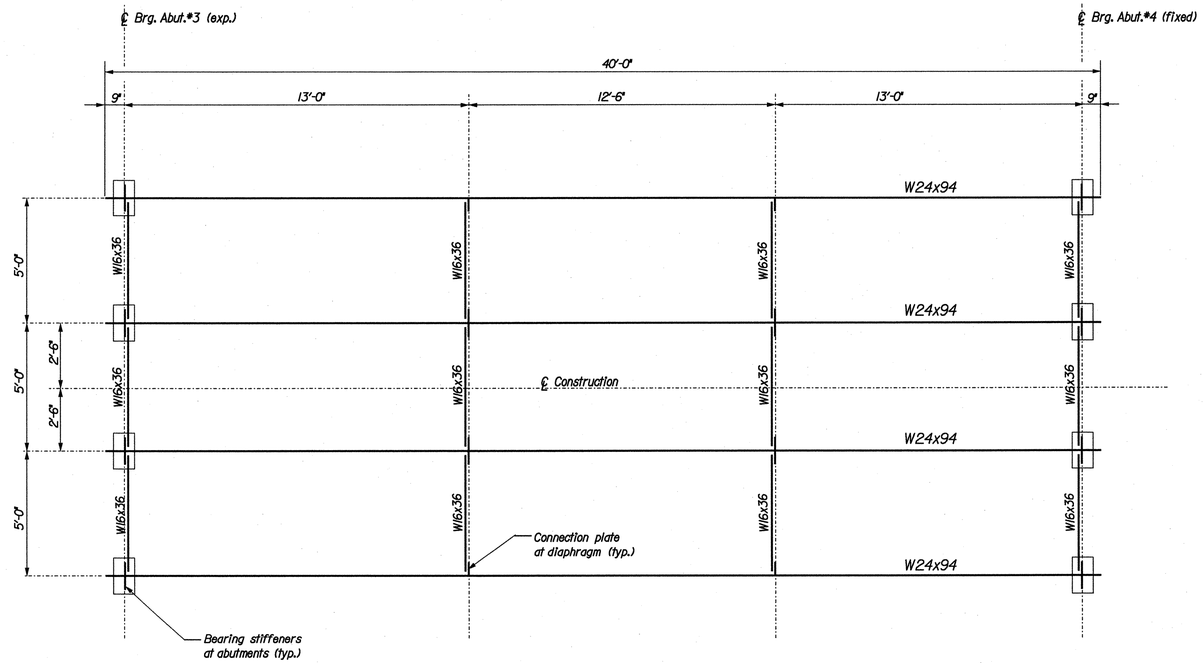

FRAMING PLAN

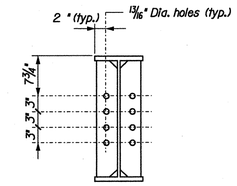

BEARING STIFFENER HOLE LAYOUT

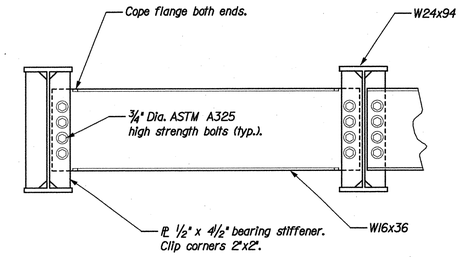

DIAPHRAGM ELEVATION

(At abutment bearings)

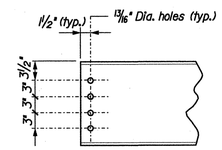

DIAPHRAGM (W16x36) HOLE LAYOUT

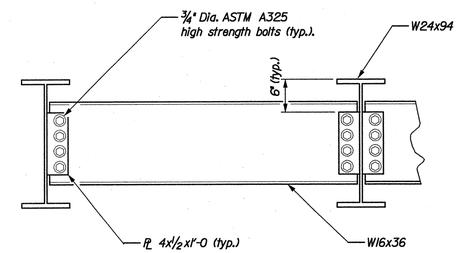

DIAPHRAGM ELEVATION

(At intermediate diaphragms)

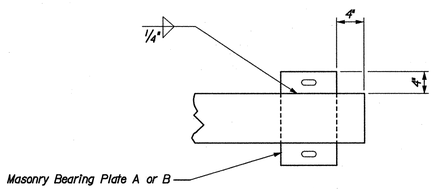

TYPICAL BEAM END

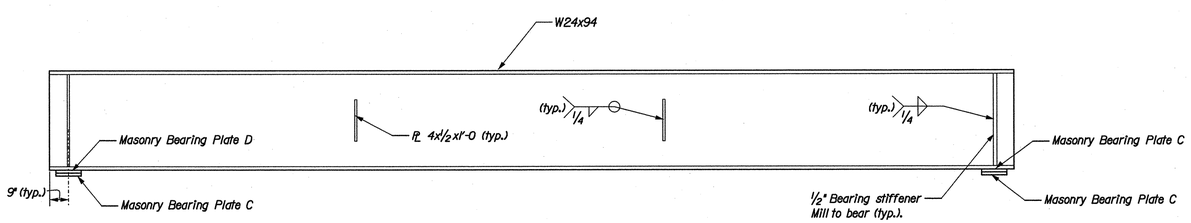

STRINGER ELEVATION

GENERAL STEEL NOTES

1...W24x94 to be Charpy V notch tested with values of 15 foot/lbs. @ 40 degrees F, frequency H.

2...Fabrication shall conform to Section 504 of Maine Dept. of Transportation Specification Revision of December 2002.

3...All steel and hardware to be hot dipped galvanized in accordance with ASTM A123 and A153. Steel substrate shall be abrasive blast cleaned to a minimum of SSPC SP6/NACE 3 prior to galvanizing.

4...Beams to be fabricated with assumed natural camber up.

5...Material shall be properly packaged/labeled in order to distinguish Bull Branch bridge and Bull Branch No. 2 bridge.

6...Shop drawings will be required. Welding procedure specifications shall be submitted prior to fabrication.

7...Rubber/neoprene pads shall be placed under stub guardrail posts, under deck panels on top of both stringer flanges and backwall as well as under bearings.

8...Add 5% to hardware quantity needed including washers and nuts.

PROJECT DESIGN ENGINEER	BY	DATE
DESIGN-DETAILED	B. Doukas	L.S.Benner	2/2010
CHECKED		
REVISIONS		
FIELD CHANGES		

PLANS

STATE OF MAINE
DEPARTMENT OF TRANSPORTATION

BULL BRANCH
OVER
BULL BRANCH STREAM
IN
RILEY TWP.
OXFORD COUNTY

FRAMING PLAN

F.H.W.A. REG. NO.	STATE	PROJECT NUMBER	SHEET NO.	TOTAL SHEETS
1	MAINE	Bridge #5855	10	12

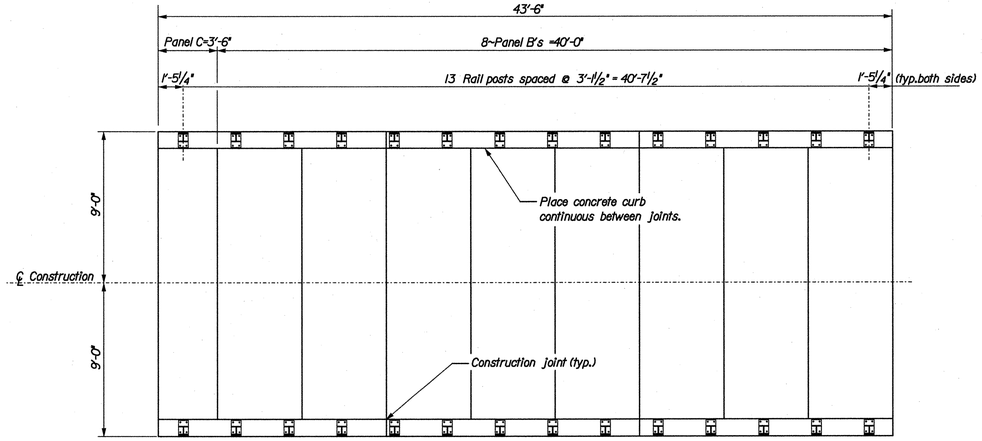

PLAN VIEW

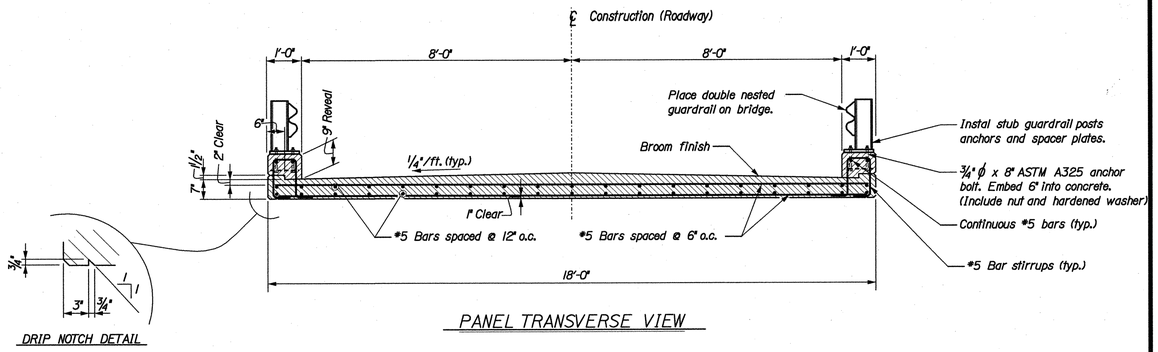

DRIP NOTCH DETAIL

PANEL TRANSVERSE VIEW

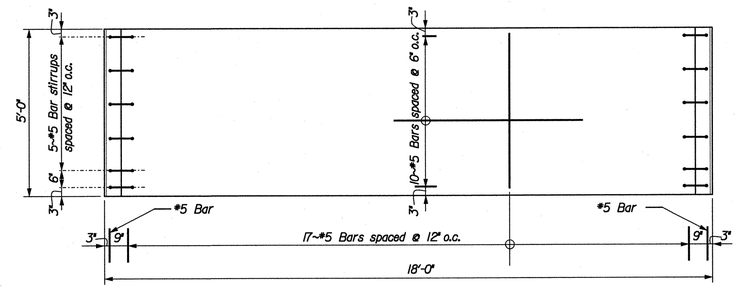

PANEL "B" TOP VIEW

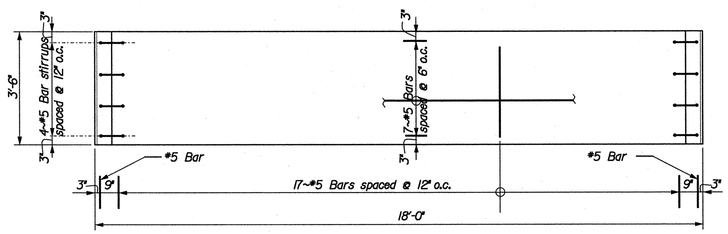

PANEL "C" TOP VIEW

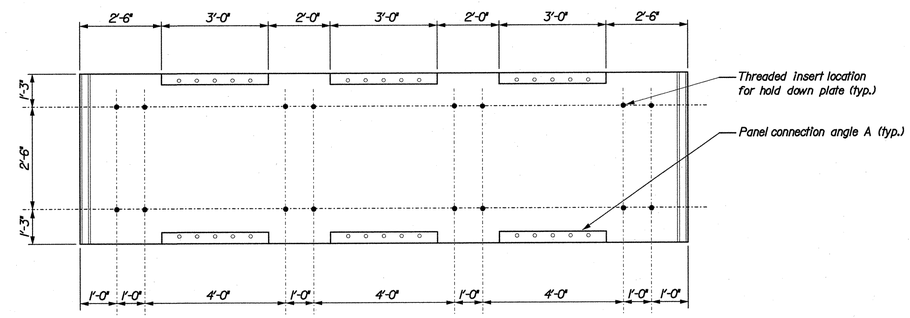

PANEL "B" BOTTOM VIEW

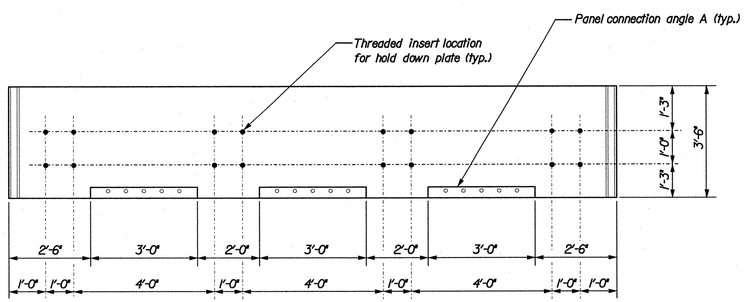

PANEL "C" BOTTOM VIEW

LEGEND

Section view of new concrete

GENERAL NOTES

1...Chamfer all exposed edges of concrete 3/4"

2...All reinforcing steel shall have a minimum of 2" of clearance.

3...Reinforcing steel splice lengths for #5 bar is 1'-9".

4...All steel material shall be hot-dipped galvanized.

STATE OF MAINE
DEPARTMENT OF TRANSPORTATION

BULL BRANCH
OVER
BULL BRANCH STREAM
IN
RILEY TWP.
OXFORD COUNTY

SUPERSTRUCTURE

PROJECT DESIGN ENGINEER	BY	DATE
DESIGN-DETAILED	Ben Foster	12/2008
CHECKED	LSBenner	
REVISIONS		
FIELD CHANGES		

PLANS

Filename: ...\rileytwp0792.dgn

Username: Lewis.Benner

F.H.W.A. REG. NO.	STATE	PROJECT NUMBER	SHEET NO.	TOTAL SHEETS
1	MAINE	Bridge #5855	11	12

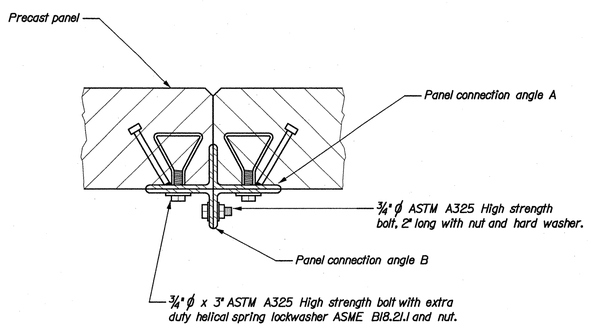

TYPICAL SECTION AT PANEL ENDS

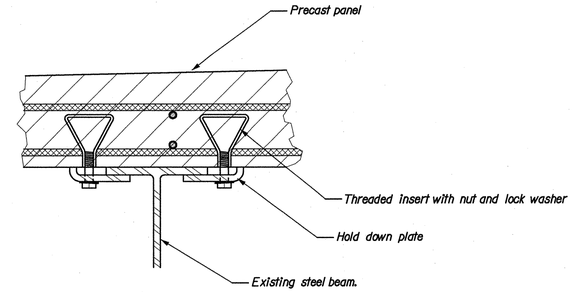

HOLD DOWN PLATE CONNECTION

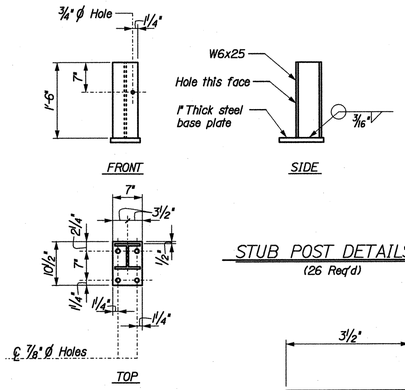

STUB POST DETAILS
(26 Req'd)

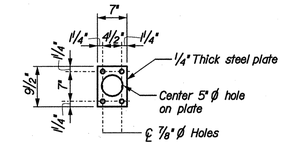

SPACER PLATE DETAIL
(26 Req'd)

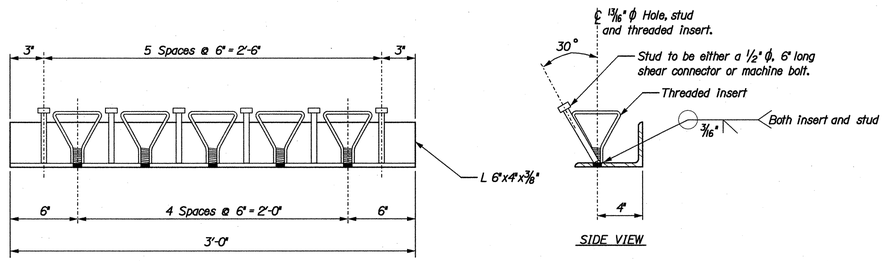

PANEL CONNECTION ANGLE A

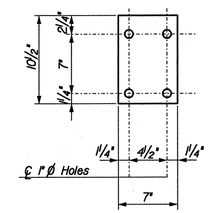

NEOPRENE/RUBBER POST PAD
(26 Req'd)

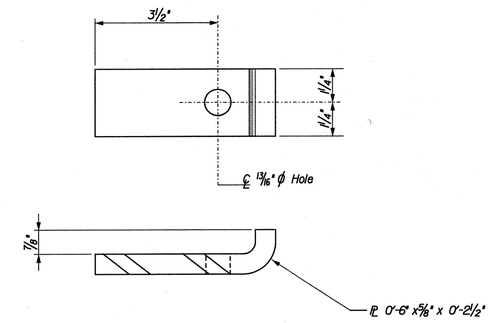

HOLD DOWN PLATE DETAIL

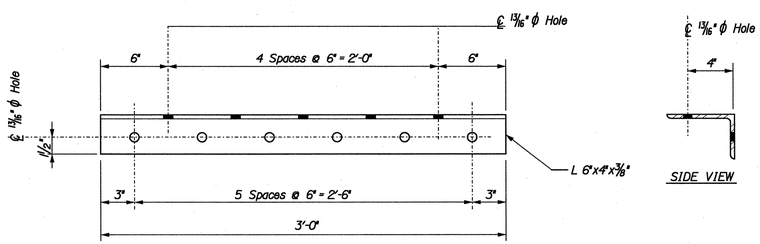

PANEL CONNECTION ANGLE B

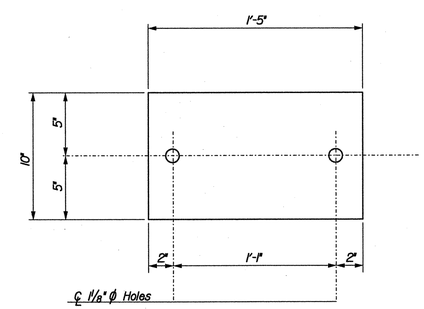

NEOPRENE/RUBBER PAD
(8 Req'd)

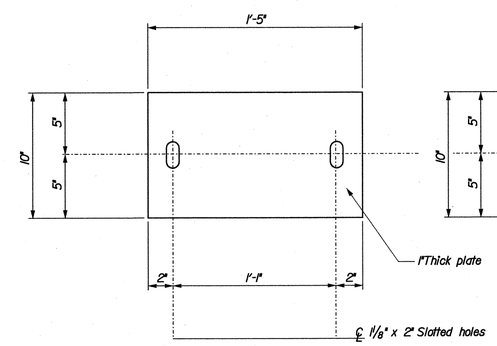

BEARING PLATE D
(4 Req'd)

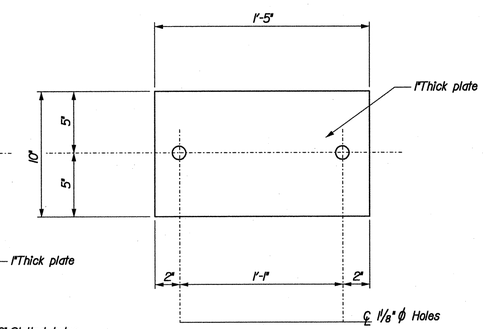

BEARING PLATE C
(12 Req'd)

STATE OF MAINE
DEPARTMENT OF TRANSPORTATION

BULL BRANCH
OVER
BULL BRANCH STREAM
IN
RILEY TWP.
OXFORD COUNTY

ASSORTED DETAILS

PROJECT DESIGN ENGINEER	BY	DATE
DESIGN-DETAILED	Ben Foster	12/2008
CHECKED	L.Benner	
REVISIONS		
FIELD CHANGES		

PLANS

Filename: ...\rileytwp0792.dgn Username: Lewis.Benner

F.H.W.A. REG. NO.	STATE	PROJECT NUMBER	SHEET NO.	TOTAL SHEETS
1	MAINE	Br.# 0792/5855	12	12

REINFORCING STEEL SCHEDULE

STRAIGHT BARS

MARK	QTY.	LENGTH	LOCATION	MARK	QTY.	LENGTH	LOCATION
F500	12	20'-0"	Abutment No. 1 Footing	F540	12	20'-0"	Abutment No. 3 Footing
F501	2	3'-9"		F541	2	3'-6"	
F502	2	5'-3"		F542	2	5'-0"	
F503	2	6'-9"		F543	2	6'-6"	
F504	2	8'-3"		F544	2	8'-0"	
F505	2	9'-9"		F545	2	9'-6"	
F506	2	11'-3"		F546	2	11'-0"	
F507	30	8-0"		F547	32	8'-0"	
F508	2	7'-3"		F548	2	7'-0"	
F509	2	5'-9"		F549	2	5'-6"	
F510	2	4'-3"		F550	2	4'-0"	
F511	2	4'-3"		F551	2	2'-6"	
F512	2	11'-3"		F552	2	2'-0"	
F513	2	3'-0"		F553	2	3'-0"	
F514	2	4'-6"		F554	2	6'-0"	
F515	6	4'-3"		F555	2	12'-0"	
F516	4	3'-0"		F556	2	3'-0"	
AB501	13	9'-1"	Abutment No. 1	F557	6	3'-3"	
AB502	13	3'-5"		AB541	13	7'-6"	Abutment No. 3
AB503	5	17'-8"		AB542	13	3'-5"	
AB504	8	22'-0"		AB543	4	17'-2"	
AB505	28	10'-2"		AB544	7	23'-9"	
AB506	6	2'-8"		AB545	30	8'-7"	
AB507	24	6'-6"		AB546	6	2'-8"	
AB509	6	4'-0"		AB547	10	5'-8"	
				AB548	12	7'-8"	
				AB550	5	4'-0"	
F520	12	20'-0"	Abutment No. 2 Footing				
F521	2	3'-9"					
F522	2	5'-3"		F560	14	20'-0"	Abutment No. 4 Footing
F523	2	6'-9"		F561	14	7'-6"	
F524	2	8'-3"		F562	36	9'-0"	
F525	2	9'-9"		AB561	13	7'-6"	Abutment No. 4
F526	2	11'-3"		AB562	13	3'-5"	
F527	30	8'-0"		AB563	4	17'-2"	
F528	2	7'-3"		AB564	7	23'-9"	
F529	2	5'-9"		AB565	24	8'-7"	
F530	2	4'-3"		AB566	12	2'-8"	
F531	2	2'-9"		AB567	10	5'-8"	
F532	2	2'-6"		AB568	5	4'-0"	
F533	2	12'-3"					
F534	2	3'-0"					
F535	2	6'-0"					
AB521	13	7'-6"	Abutment No. 2				
AB522	13	3'-9"					
AB523	4	17'-8"					
AB524	3	22'-0"					
AB525	4	8'-7"					
AB526	5	2'-8"					
AB527A	10	4'-8"					
AB527B	10	6'-6"					
AB529	5	4'-0"					
MARK	QTY.	LENGTH	LOCATION	MARK	QTY.	LENGTH	LOCATION

BENT BARS

MARK	QTY.	LENGTH	TYPE	A	B	C	D	E	F	G	H	O	R	LOCATION
AB500	13	9'-1"	L	6'-11"	2'-2"									Abutment No. 1
AB508	12	4'-0"	V				2'-0"	2'-0"			1'-5"			Abutment No. 1
AB520	13	7'-6"	L	5'-4"	2'-2"									Abutment No. 2
AB528	10	4'-0"	V				2'-0"	2'-0"			1'-5"			Abutment No. 2
AB540	13	7'-6"	L	5'-4"	2'-2"									Abutment No. 3
AB549	12	4'-0"	V				2'-0"	2'-0"			1'-5"			Abutment No. 3
AB560	13	7'-6"	L	5'-4"	2'-2"									Abutment No. 4
MARK	QTY.	LENGTH	TYPE	A	B	C	D	E	F	G	H	O	R	LOCATION

TYPE - BENDING DIAGRAMS

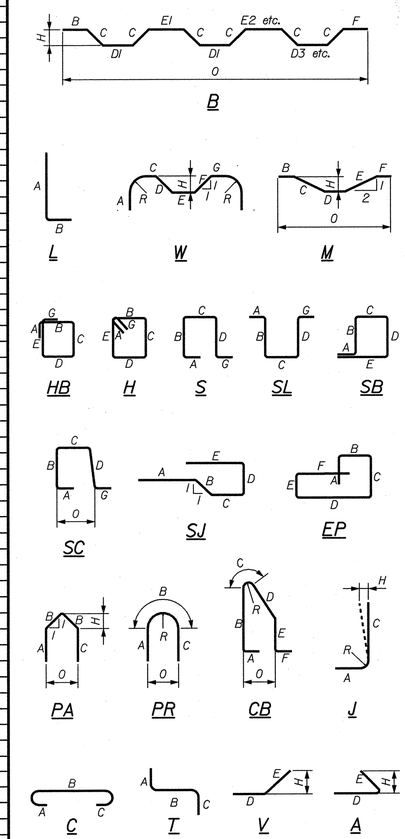

All dimensions are out-to-out of bar.

Bending details and hooks shall conform to the recommendations of the current revision of ACI Standard 318.

Reinforcing Bar: ASTM A615/A615M, Grade 420

GENERAL NOTES

The first digit following the letter(s) of the mark indicate the size ofthe bar:

Mark "F520" = bar size #5
Mark "AB545" = bar size #5

STATE OF MAINE
DEPARTMENT OF TRANSPORTATION

BULL BRANCH/BULL BRANCH 2
OVER
BULL BRANCH STREAM
IN
RILEY TWP.
OXFORD COUNTY

REINFORCING-SCHEDULE

PROJECT DESIGN ENGINEER	BY	DATE
DESIGN-DETAILED	B. Doukas	3/2010
CHECKED	L.Stiemer	
REVISIONS		
FIELD CHANGES		

PLANS

Division: MAINT

Filename: ...\rileytwp0792.dgn