STATE OF MAINE
DEPARTMENT OF TRANSPORTATION

SPECIFICATIONS

Design: International Building Code 2009

DESIGN LOADING

Live Load ------ Impact of 30,000lb Vehicle @ Endwall Concrete Only
Ground Snow Load ---------- 80psf
Wind Load ---------- 90mph
---------- Exposure C, Catagory I

MATERIALS

Concrete (Unless noted otherwise) ---------- Class "A"
Reinforcing Steel ---------- ASTM A615, Grade 60
Structural Steel:
All Material (except as noted) ---------- ASTM A709, Grade 50
High Strength Bolts ---------- ASTM A325, Type I

BASIC DESIGN STRESSES

Concrete ---------- f 'c = 4,350 psi
Reinforcing Steel ---------- f y = 60,000 psi

FAIRFIELD MAINTENANCE SALT SHED

LIST OF DRAWINGS

Title Sheet ---------- 1
General Plan ---------- 2
Foundation Plan ---------- 3
Footing Reinforcement Plan ---------- 4
West Endwall & Sidewall Elevation ---------- 5
East Endwall Elevation ---------- 6
Typical Foundation Sections ---------- 7

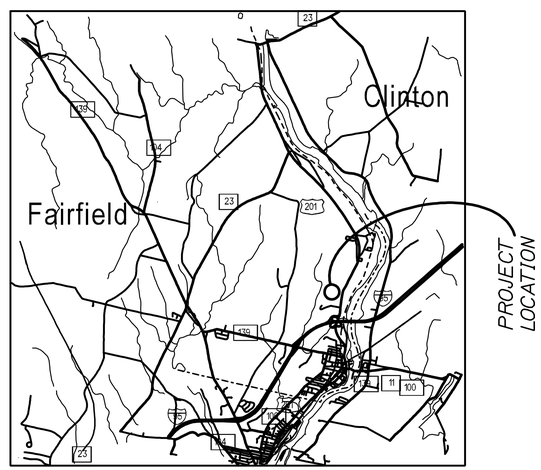

STATE OF MAINE
DEPARTMENT OF TRANSPORTATION

APPROVED | DATE
COMMISSIONER:
CHIEF ENGINEER:

STATE OF MAINE
ERIC J. CALDERWOOD
No. 9099
LICENSED
PROFESSIONAL ENGINEER

9099 P.E. NUMBER
DATE JULY 2010

		BY	DATE
DESIGN-DETAILED	OGK	JJH	JULY 2010
CHECKED-REVIEWED		ETC	
REVISIONS 1			
REVISIONS 2			
REVISIONS 3			
REVISIONS 4			
FIELD CHANGES			

FAIRFIELD MAINT. SALT SHED

GENERAL SITE PLAN

SHEET NUMBER
1

CALDERWOOD ENGINEERING
22 RIVER ROAD
RICHMOND, ME 04357
TEL (207) 737-2007 FAX (207) 737-2008

Filename: ...\001_Title.dgn Workgroup: Structures Division Username: common Date:8/2/2010

CALDERWOOD ENGINEERING, ETC.
STRUCTURAL ENGINEERING • DETAILING SERVICES
222 RIVER RD, RICHMOND, ME 04357 PHFX (207)737-2007/(207) 737-2008

PREPARED FOR:
STATE OF MAINE DOT

FAIRFIELD, ME SALT SHED
CEE 001-ST-10

STATE OF MAINE
ERIC J. CALDERWOOD
No. 9099
LICENSED
PROFESSIONAL ENGINEER

P.E. NUMBER 9099

DATE JULY 2010

	BY	DATE
DESIGN-DETAILED	OGK	JULY 2010
CHECKED-REVIEWED	JJH	
	ETC	
REVISIONS 1		
REVISIONS 2		
REVISIONS 3		
REVISIONS 4		
FIELD CHANGES		

FAIRFIELD MAINTANANCE SALT SHED

GENERAL SITE PLAN

SHEET NUMBER

2

CALDERWOOD ENGINEERING, ETC.
222 RIVER ROAD
RICHMOND, ME 04357
TEL (207)737-2007 FAX (207)737-2008

Filename: ...\002_Gen Plan.dgn Workgroup: Structures Division Username: common Date:8/2/2010

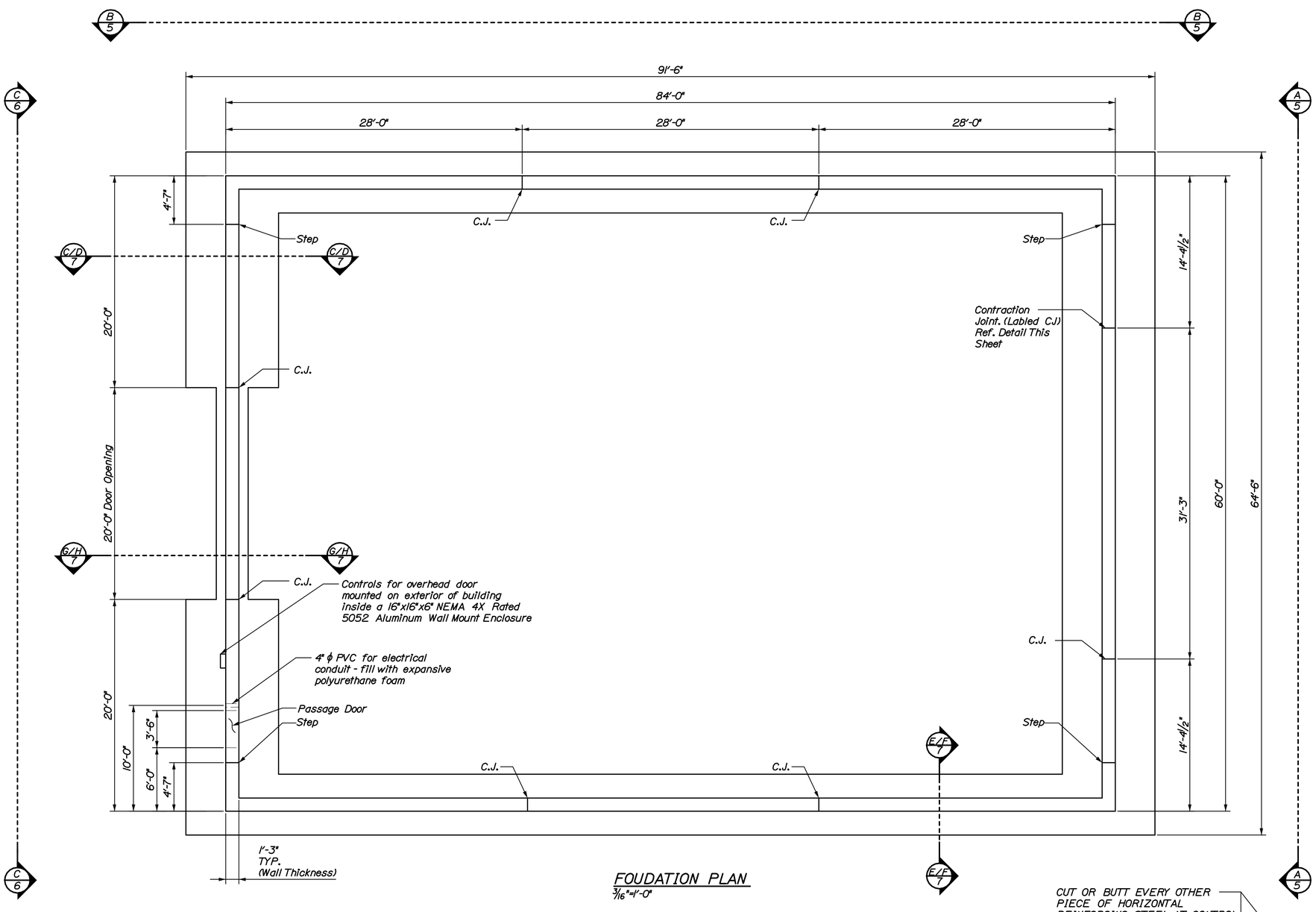

FOUDATION PLAN
3/16"=1'-0"

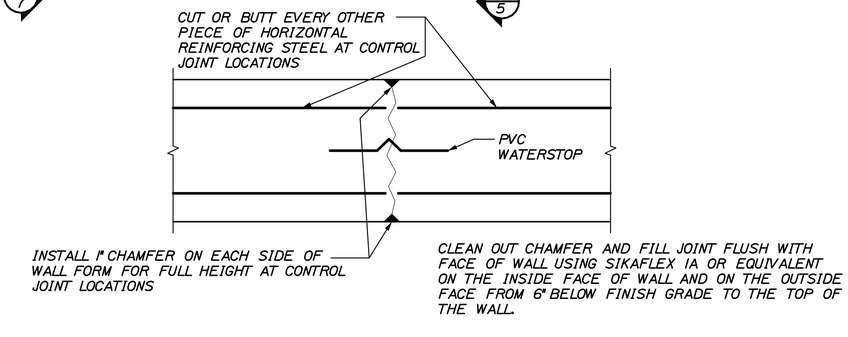

WEAKENED PLANE CONTROL JOINT
1 1/2" = 1'-0"

CALDERWOOD ENGINEERING, ETC.
STRUCTURAL ENGINEERING • DETAILING SERVICES
222 RIVER RD, RICHMOND, ME 04357 PH/FX (207)737-2007/(207) 737-2008

PREPARED FOR:
STATE OF MAINE DOT

FAIRFIELD, ME SALT SHED
CEE 001-ST-10

STATE OF MAINE
ERIC J. CALDERWOOD
No. 9099
LICENSED
PROFESSIONAL ENGINEER

P.E. NUMBER 9099

DATE JULY 2010

	BY	DATE
DESIGN-DETAILED	JJH	JULY 2010
CHECKED-REVIEWED	ETC	
REVISIONS 1		
REVISIONS 2		
REVISIONS 3		
REVISIONS 4		
FIELD CHANGES		

FAIRFIELD MAINTANANCE SALT SHED

FOUNDATION PLAN

SHEET NUMBER
3

Filename: ...\003_Foundation Plan.dgnWorkgroup: Structures Division Username: common Date:8/2/2010

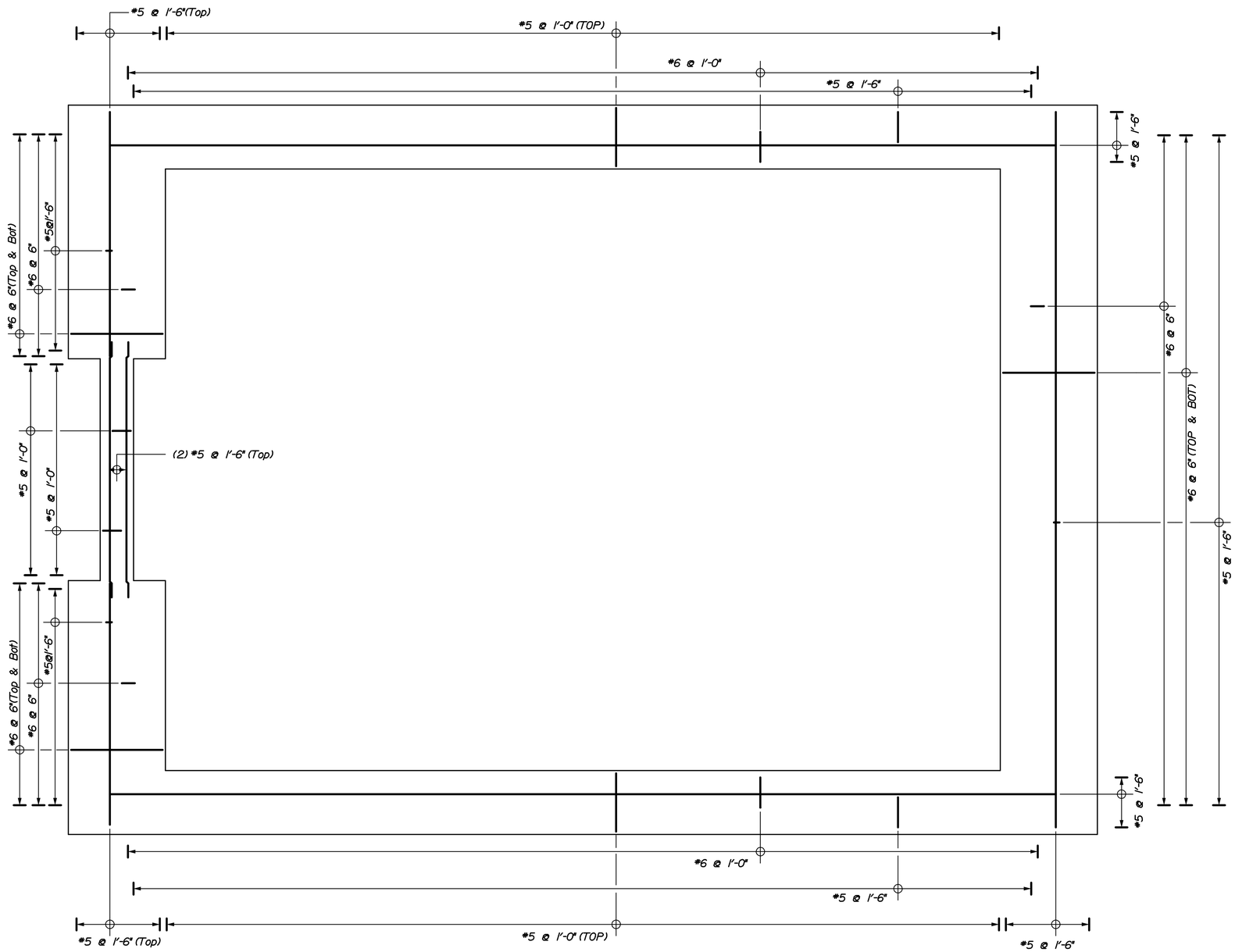

FOOTING REINFORCEMENT PLAN

3/16"=1'-0"

Filename: ...\004_footing.dgn Workgroup: Structures Division Username: common Date:8/2/2010

CALDERWOOD ENGINEERING, ETC.
STRUCTURAL ENGINEERING • DETAILING SERVICES
222 RIVER RD, RICHMOND, ME 04357 PH/FX (207)737-2007/(207) 737-2008

PREPARED FOR:
STATE OF MAINE DOT
FAIRFIELD, ME SALT SHED
CEE 001-ST-10

STATE OF MAINE
ERIC J. CALDERWOOD
No. 9099
LICENSED
PROFESSIONAL ENGINEER

9099
P.E. NUMBER
DATE JULY 2010

		BY	DATE
DESIGN-DETAILED	OGK	JJH	JULY 2010
CHECKED-REVIEWED		ETC	
REVISIONS 1			
REVISIONS 2			
REVISIONS 3			
REVISIONS 4			
FIELD CHANGES			

FAIRFIELD MAINTANANCE SALT SHED

FOOTING REINFORCEMENT PLAN

SHEET NUMBER
4

CALDERWOOD ENGINEERING
222 RIVER ROAD
RICHMOND, ME 04357
PH: (207) 737-2007 FAX: (207) 737-2008

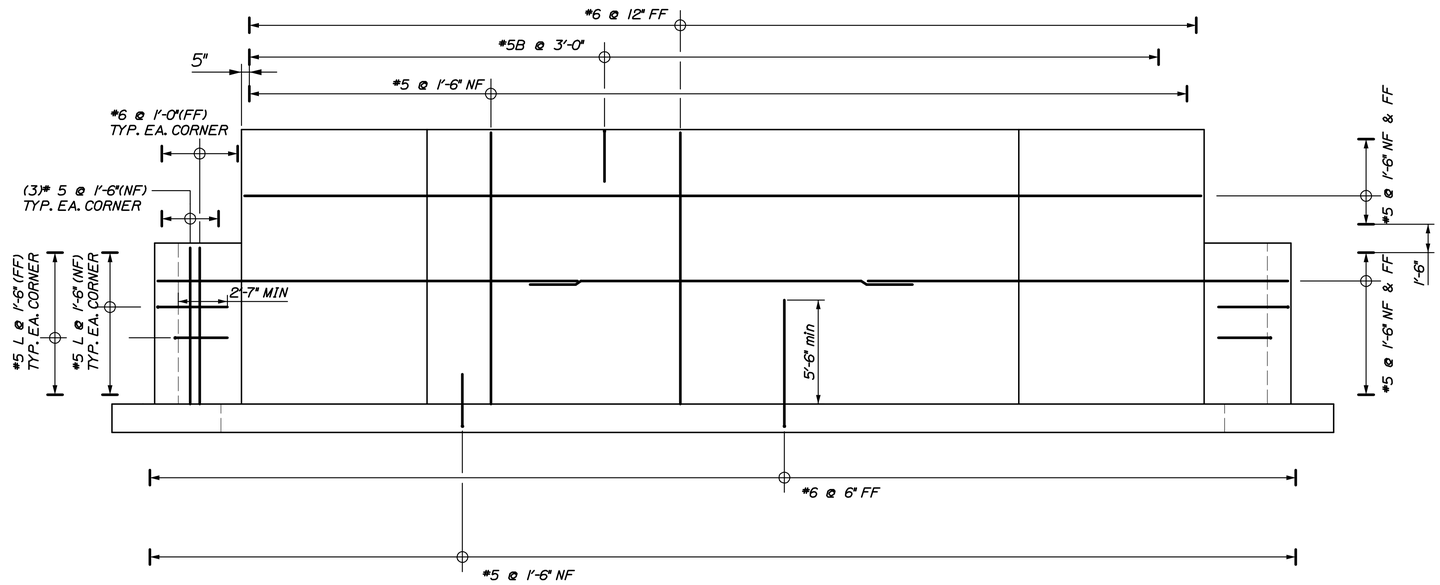

A/5 ENDWALL ELEVATION
1/4"=1'-0"

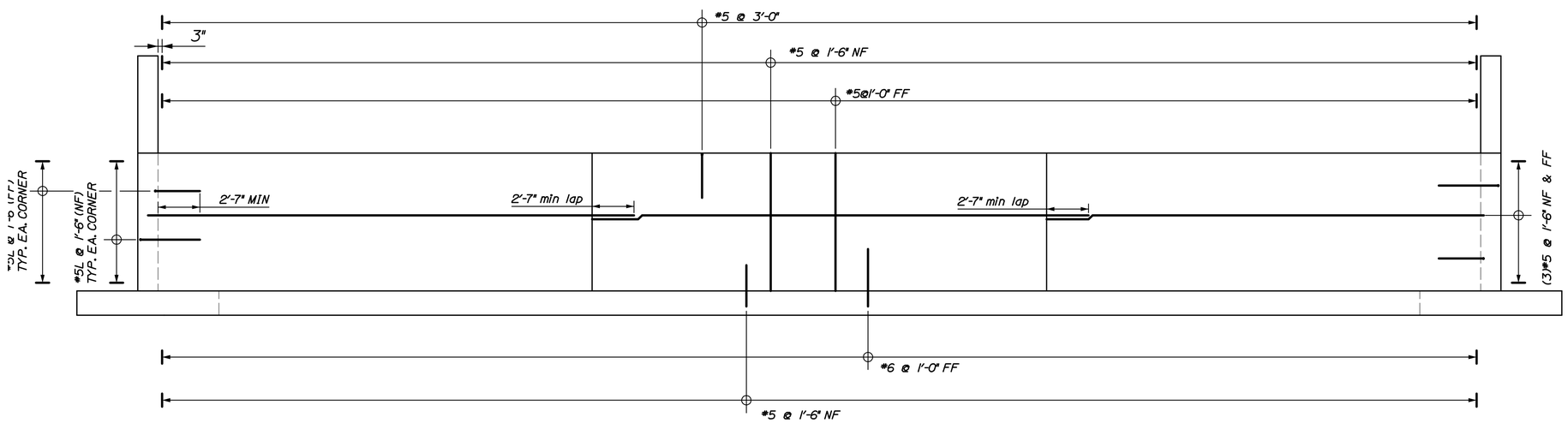

B/5 SIDEWALL ELEVATION
1/4"=1'-0"

CALDERWOOD ENGINEERING, ETC.
STRUCTURAL ENGINEERING • DETAILING SERVICES
222 RIVER RD, RICHMOND, ME 04357 PH/FX (207)737-2007/(207) 737-2008
PREPARED FOR:
STATE OF MAINE DOT
FAIRFIELD, ME SALT SHED
CEE 001-ST-10

STATE OF MAINE
ERIC J. CALDERWOOD
No. 9099
LICENSED
PROFESSIONAL ENGINEER

P.E. NUMBER 9099
DATE JULY 2010

	BY	DATE
DESIGN-DETAILED	OGK	JULY 2010
CHECKED-REVIEWED	JJH	
	ETC	
REVISIONS 1		
REVISIONS 2		
REVISIONS 3		
REVISIONS 4		
FIELD CHANGES		

FAIRFIELD MAINTANANCE
SALT SHED

WALL REINFORCING

SHEET NUMBER
5

CALDERWOOD ENGINEERING
222 RIVER RD.
RICHMOND, ME 04357
PH/FX (207) 737-2007/(207) 737-2008

Filename: ...\005_Elevation.dgn Workgroup: Structures Division Username: common Date:8/2/2010

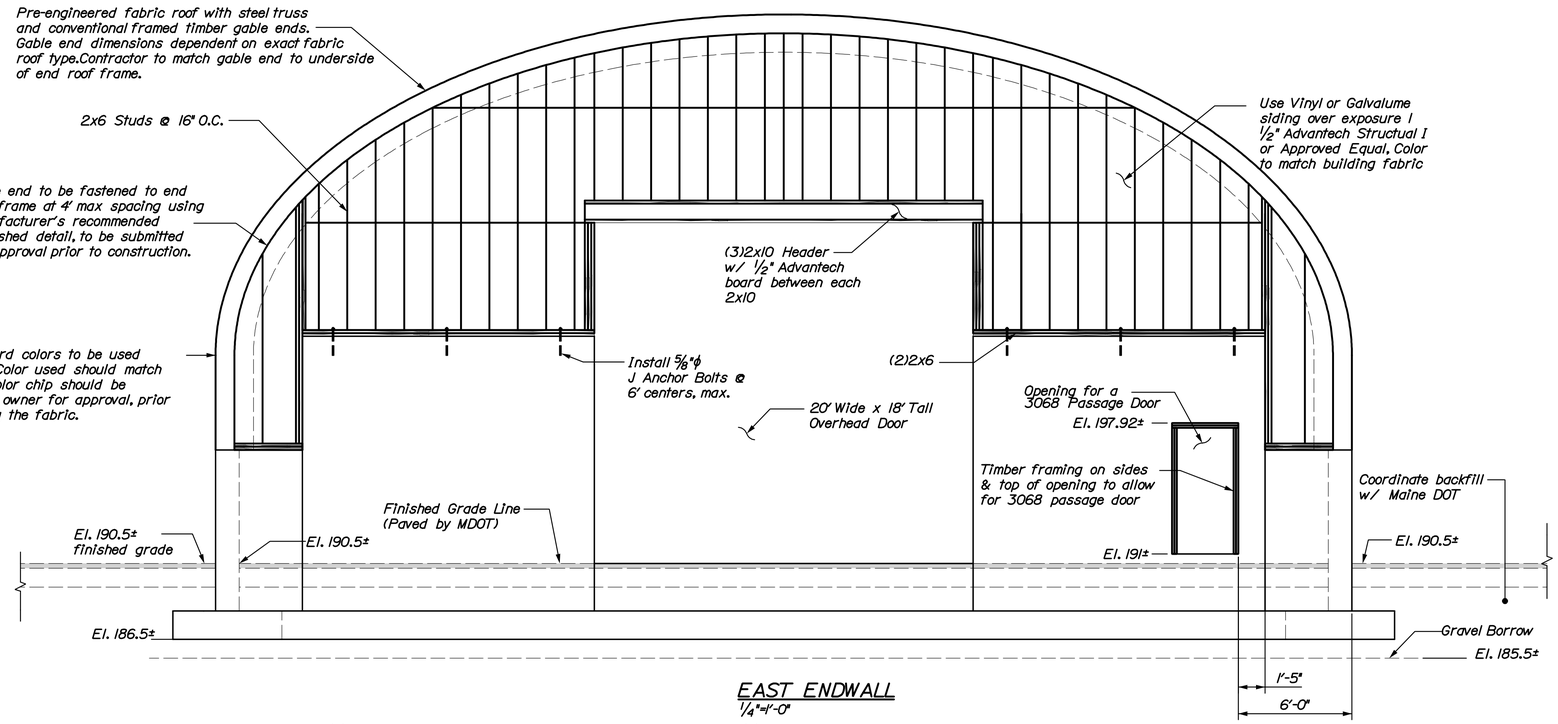

EAST ENDWALL
1/4"=1'-0"

Note:
East Endwall shown.
West Endwall Similar
w/ out Overhead Door
& Passage Door

Note:
Drawing is conceptual.
Exact dimension and sizes dependent
on compatibility with fabric roof
manufactures specifications.

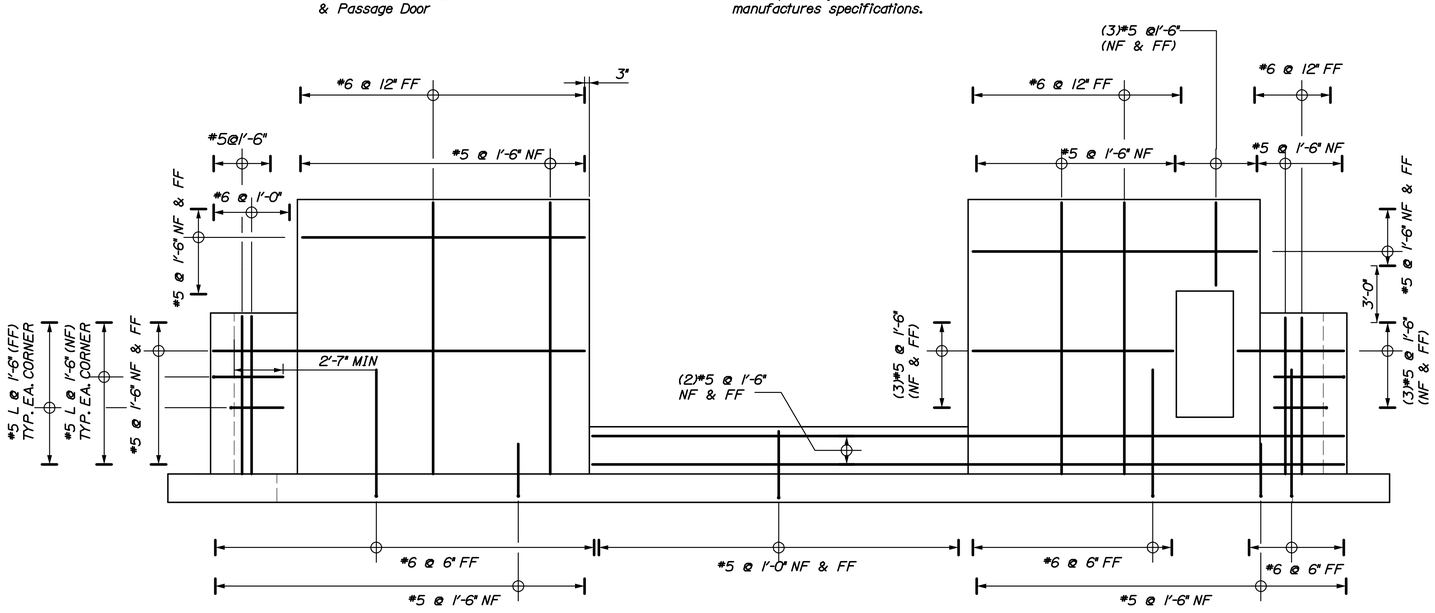

C/6 ENDWALL ELEVATION
1/4"=1'-0"

GENERAL BUILDING NOTES

1. Contractor to furnish and install a pre-engineered fabric covered structural steel salt storage facility.
2. The building is to have structural wooden gable ends with one end coped to allow for a 20' wide by 18' tall garage door. Garage door shall be supported by steel truss of fabric building. Fabric end shall match with gable end and selected siding.
3. The fabric covered building shall firmly attach to foundation in accordance w/ manufaturer's published recommended detail.
4. Dimension fabric building to meet the dimensions shown. Alternative larger fabric building may be acceptable pending engineers approval & concrete foundation dimension modification at no extra cost to the State of Maine. The fabric structure must allow for a minimum of 20' of clearance within the building.
5. The fabric structure shall be designed to meet all applicable site location loads per the 2009 International Building Code (IBC) and all other federal, state and municipal requirements.
6. All steel parts shall be Hot Dip Galvanized after fabrication. All bolts and anchors shall be Hot Dip Galvanized.
7. All welding shall be done in accordance with AWS D1.1 by certified welders qualified in the postion required.
8. Fabric thickness shall be greater than 24mil. Coating thickness shall be greater than 4 mil per side. 12.5 oz to 28 oz/sy fire retardant fabric cover.
9. Profile shows a round truss type, a triangular truss is also acceptable. Pre engineered building shall meet design requirements and specifications of Rubb Building Systems, Clear Span TM Truss Arch, or approved equal. Truss is to be clear span only, no bottom chord.
10. Foundation designed for 800 lbs. per linear foot from the fabric building truss.

GENERAL NOTES

1. All concrete shall have a minimum compressive strength of 4350 psi and must meet Maine DOT Standard Specifications for Class 'A' concrete.
2. All reinforcing steel shall have a minimum cover of 2" in the concrete walls and 3" in all footings cast against earth unless noted otherwise (UNO).
3. All reinforcing steel shall be epoxy coated.
4. All reinforcing steel shall have a minimum specified yield strength of 60ksi.
5. Gable ends to be constructed with SPF#2 or better. All members adjacent to concrete shall be SYP # 2 or better & pressure treated with MCA-C.14.
6. Contractor to coordinate layout of specific roof frame anchors per manufacturer's details prior to casting of foundation.
7. Nails that connect pressure treated elements to the structure shall be galvanized.
8. Gable end shall be aligned with roof frame and be attached every 4' max.
9. Anchor bolts shall be ASTM F1554 Gr. 36. with a minumum of 1'-2" embedment and 6" projection.
10. All construction joints shall be in accordance with Maine DOT Standard Detail 502(01)
11. All footings shall be buried a minimum of 4' below finished grade. All walls shall have a minumum of 2'-0" of exposed height along the outside of the building.
12. All gravel borrow shall meet the rquirements of Maine DOT Standard 703.20

CALDERWOOD ENGINEERING, ETC.
STRUCTURAL ENGINEERING • DETAILING SERVICES
222 RIVER RD, RICHMOND, ME 04357 PH/FX (207)737-2007/(207) 737-2008

PREPARED FOR:
STATE OF MAINE DOT
FAIRFIELD, ME SALT SHED
CEE 001-ST-10

STATE OF MAINE ERIC A. CALDERWOOD No. 9099 LICENSED PROFESSIONAL ENGINEER

P.E. NUMBER 9099
DATE JULY 2010

	BY	DATE
DESIGN-DETAILED	JJH	JULY 2010
CHECKED-REVIEWED	ETC	
REVISIONS 1		
REVISIONS 2		
REVISIONS 3		
REVISIONS 4		
FIELD CHANGES		

FAIRFIELD MAINTANANCE SALT SHED

EAST ENDWALL ELEVATION

SHEET NUMBER
6

Filename: ...\006_East Elev.dgn Workgroup: Structures Division Username: common Date:8/2/2010

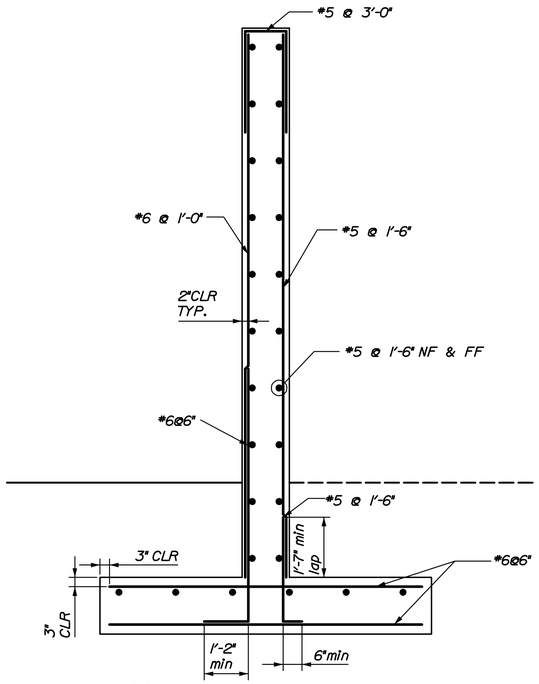

C/7 ENDWALL SECTION
1/2"=1'-0"

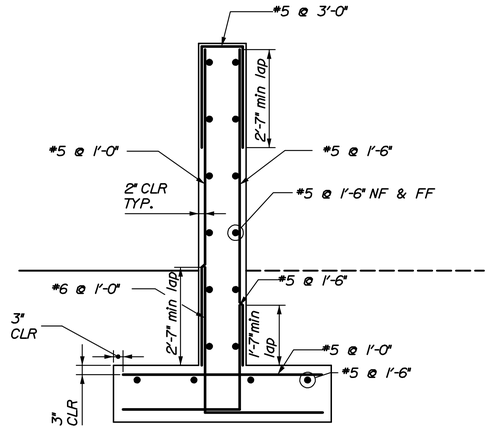

E/7 SIDEWALL SECTION
1/2"=1'-0"

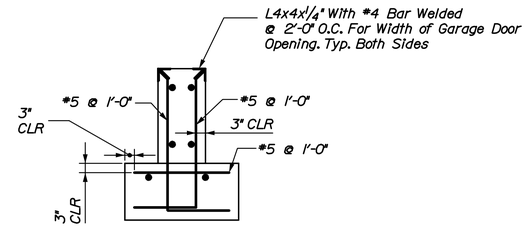

G/7 ENDWALL SECTION AT DOOR
1/2"=1'-0"

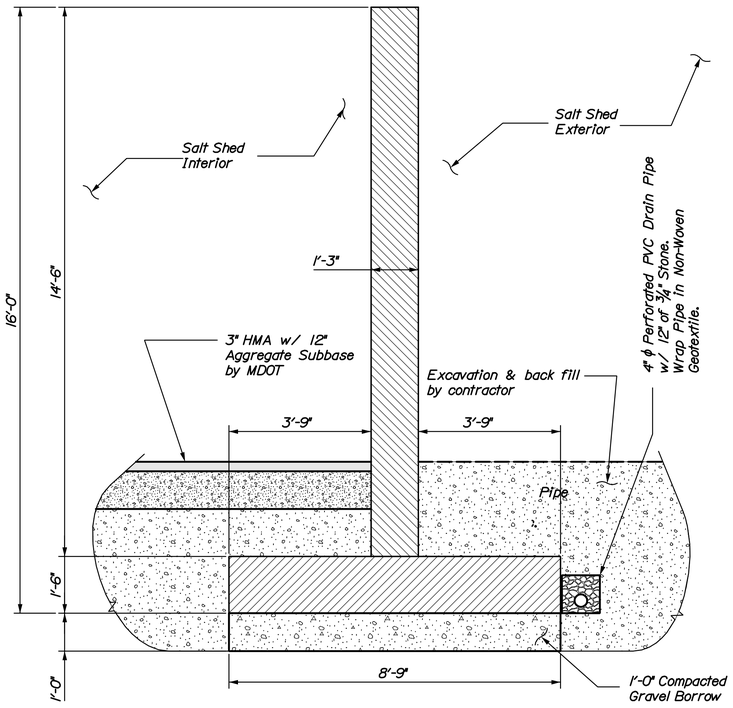

D/7 ENDWALL SECTION
1/2"=1'-0"

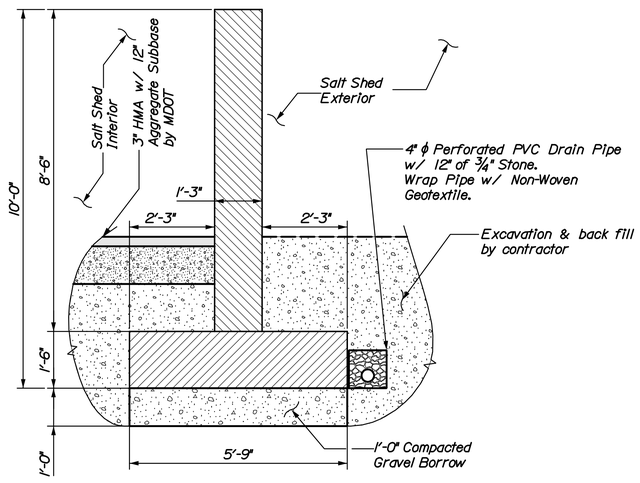

F/7 SIDEWALL SECTION
1/2"=1'-0"

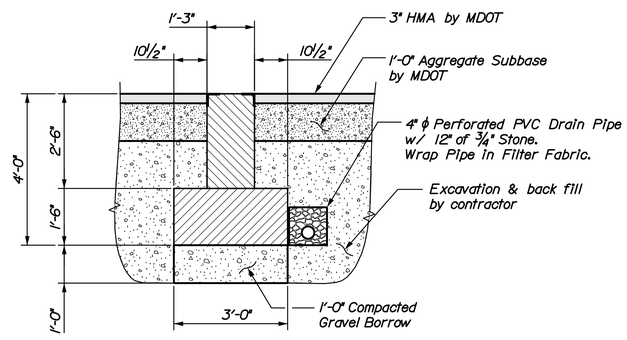

H/7 ENDWALL SECTION AT DOOR
1/2"=1'-0"

CALDERWOOD ENGINEERING, ETC.
STRUCTURAL ENGINEERING • DETAILING SERVICES
222 RIVER RD, RICHMOND, ME 04357 PH/FX (207)737-2007/(207) 737-2008

PREPARED FOR:
STATE OF MAINE DOT

FAIRFIELD, ME SALT SHED
CEE 001-ST-10

STATE OF MAINE
ERIC J. CALDERWOOD
No. 9099
LICENSED PROFESSIONAL ENGINEER

P.E. NUMBER 9099
DATE JULY 2010

	BY	DATE
DESIGN-DETAILED	JJM	JULY 2010
CHECKED-REVIEWED	ETC	
REVISIONS 1		
REVISIONS 2		
REVISIONS 3		
REVISIONS 4		
FIELD CHANGES		

FAIRFIELD MAINTANANCE SALT SHED

TYPICAL WALL SECTIONS

SHEET NUMBER
7

Filename: ...\007_Typ. Sections.dgn Workgroup: Structures Division Username: common Date:8/2/2010