STATE OF MAINE
DEPARTMENT OF TRANSPORTATION

TMSI

PROJECT NO. STP-1729(000)X

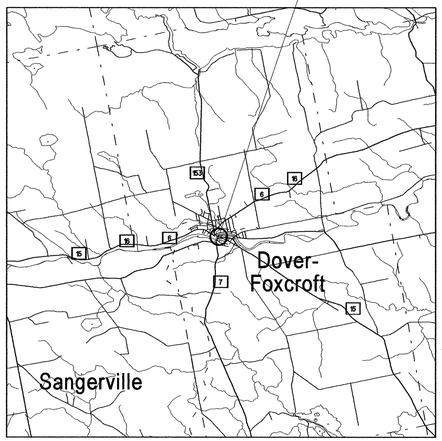

LOCATION MAP

A PORTION OF
PISCATAQUIS COUNTY

2 0 2 4
Scale in Miles

DOVER-FOXCROFT

PISCATAQUIS

ROUTE 15 / ROUTE 7

STP-1729(000)X

PROJECT LENGTH : 0.000 MILES

TRAFFIC SIGNALS AND SIDEWALK RECONSTRUCTION

INDEX OF SHEETS

Description	Sheet No.
Title Sheet	1
Estimated Quantities, Notes and Details	2
Geometry Plan	3
Plan	4

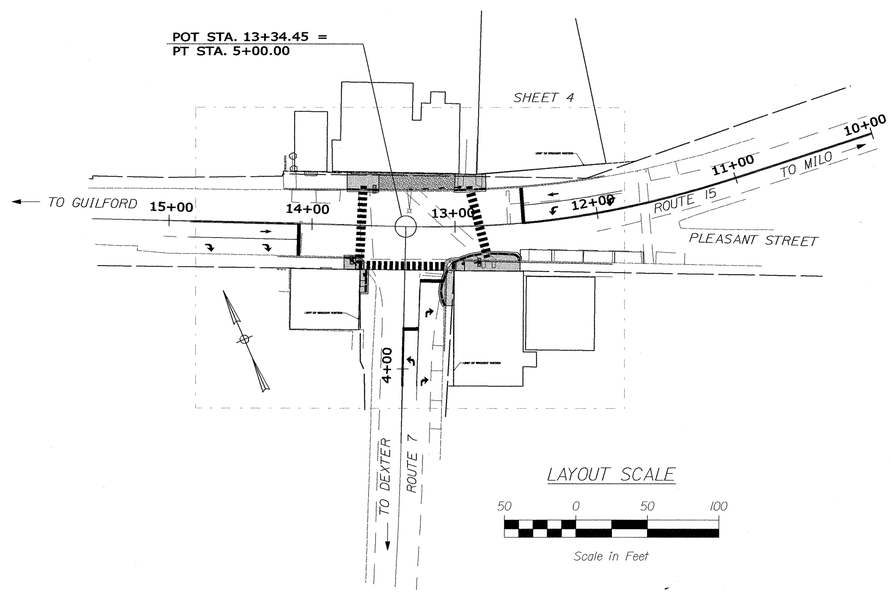

LAYOUT SCALE

50 0 50 100
Scale in Feet

PLAN LEGEND

Town, County, State
Property Lines
R/W Lines-Existing
R/W Lines-Proposed

Culvert-Existing
Culvert Proposed

Curbing	Existing	Proposed
Type 1		
Type 3		
Type 5		

Outline of Bodies of Water
Ledge
Buildings

Trees — Conifer — Deciduous
Tree Line
Clearing Limit Line — CLL — CLL

Centerline-Existing
Centerline-Proposed — 10+00
Travelway-Existing
Travelway-Proposed
Railroad

Catch Basins — Existing — Proposed
Manholes — Existing — Proposed
Proposed Underdrain
Proposed Ditch
Existing Ditch

Utility Poles — Existing — Proposed
Fire Hydrants — Existing — Proposed
Existing Water Line — W
Existing San. Sewer
Existing San. Sewer Manhole

Guardrail-Existing
Guardrail-Proposed
Guardrail-Cable, Other

TRAFFIC DATA

	SR 15 E/O SR 7	SR 7 S/O SR 15	SR 15 W/O SR 7
Current (2010) AADT	7,800	5,890	10,470
Design Speed (mph)	25	25	25

PROGRAM AREA: TRAFFIC
SCOPE OF WORK: PEDESTRIAN SIGNAL UPGRADE AND SIDEWALK RECONSTRUCTION

STATE OF MAINE
DEPARTMENT OF TRANSPORTATION

APPROVED	DATE
COMMISSIONER:	5/7/10
CHIEF ENGINEER:	5/11/10

STATE OF MAINE ALBERT L. GODFREY No. 4226 LICENSED PROFESSIONAL ENGINEER

SIGNATURE	P.E. NUMBER
4226	
	MAY 5, 2010
	DATE

PROJECT INFORMATION

PROGRAM	TRAFFIC	
PROJECT MANAGER	JIM MANSIR	
DESIGNER	AL GODFREY	
CONSULTANT	TERRA MAGNA SERVICES, INC.	
PROJECT RESIDENT		
CONTRACTOR		
PROJECT COMPLETION DATE		

PIN 17290.00

STP-1729(000)X

DOVER-FOXCROFT
ROUTE 15 / ROUTE 7

TITLE SHEET

SHEET NUMBER

1

OF 4

Filename: ...\HIGHWAY\MSTA\001_Title_001.dgn Division: HIGHWAY Username: jeason Date:5/6/2010

ESTIMATED QUANTITIES

	ITEM NO.	DESCRIPTION	QUANTITY	UNIT
	202.11	REMOVING PORTLAND CEMENT CONCRETE PAVEMENT	90	SY
	202.20	REMOVING BITUMINOUS CONCRETE PAVEMENT	170	SY
	202.202	REMOVING PAVEMENT SURFACE	3	SY
	203.2001	COMMON EXCAVATION - PLAN QUANTITY	25	CY
	304.104	AGGREGATE SUBBASE COURSE - GRAVEL (PLAN QUANTITY)	4	CY
	403.209	HOT MIX ASPHALT, 9.5 mm (SW, DRIVES, INCIDENTALS)	15	TON
	403.213	HOT MIX ASPHALT, 12.5 mm BASE	6	TON
	411.10	UNTREATED AGGREGATE SURFACE COURSE, TRUCK MEASURE	25	CY
	608.08	REINFORCED CONCRETE SIDEWALK	95	SY
	608.26	CURB RAMP DETECTABLE WARNING FIELD	48	SF
	609.11	VERTICAL CURB TYPE 1	18	LF
	609.12	VERTICAL CURB TYPE 1-CIRCULAR	26	LF
	609.234	TERMINAL CURB TYPE 1-4'	1	EA
	609.238	TERMINAL CURB TYPE 1-8'	10	EA
	609.441	CURBING REMOVED AND STACKED	129	LF
	626.21	METALLIC CONDUIT	70	LF
	626.31	18" FOUNDATION	5	EA
	626.36	REMOVE OR MOD CONCRETE FOUNDATION	2	EA
	627.733	WHITE OR YELLOW PVMT MARKING LINE	410	LF
	627.75	WHITE OR YELLOW PAVEMENT AND CURB MARKING	330	SF
	627.95	STREETPRINT DURATHERM PAVEMENT MARKING	450	SF
*	629.05	HAND LABOR	10	HR
*	631.12	ALL PURPOSE EXCAVATOR (INCLUDING OPERATOR)	10	HR
*	631.172	TRUCK - LARGE (INCLUDING OPERATOR)	10	HR
*	631.22	FRONT END LOADER (INCLUDING OPERATOR)	10	HR
	643.71	TRAFFIC SIGNAL MODIFICATION (RTE 15/RTE 7)	1	LS
	643.92	PEDESTAL POLE	6	EA
	645.271	REG WARN CONF RTE SIGNS TYPE 1	5	SF
	652.311	TYPE II BARRICADE	6	EA
	625.33	DRUM	25	EA
	652.34	CONE	25	EA
	652.35	CONSTRUCTION SIGNS	400	SF
	652.361	MAINTENANCE OF TRAFFIC CONTROL DEVICES	1	LS
	652.38	FLAGGER	600	HR
	659.10	MOBILIZATION	1	LS

* UNDETERMINED LOCATIONS

NOTES

1. THE UTILITIES INVOLVED IN THIS CONTRACT ARE AS FOLLOWS:

   CENTRAL MAINE POWER
   DOVER-FOXCROFT WATER DISTRICT
   FAIR POINT COMMUNICATIONS
   TIME WARNER CABLE

2. NO UTILITY INVOLVEMENT IS ANTICIPATED.
3. ALL WASTE MATERIAL NOT USED ON THE PROJECT SHALL BE DISPOSED OF OFF THE PROJECT IN WASTE AREAS APPROVED BY THE RESIDENT.
4. RECONSTRUCTED PAVED WALKS TO BE CONSTRUCTED WITH VARIABLE DEPTH UNTREATED AGGREGATE SURFACE COURSE AND 2" HOT MIX ASPHALT UNLESS OTHERWISE NOTED IN THE PLANS OR DIRECTED BY THE RESIDENT.
5. NEW PAVED WALKS SHALL BE CONSTRUCTED WITH 12" AGGREGATE SURFACE COURSE-GRAVEL AND 2" HOT MIX ASPHALT UNLESS OTHERWISE NOTED ON THE PLANS OR DIRECTED BY THE RESIDENT.
6. ALL CONCRETE WALKS TO BE CONSTRUCTED WITH 10" AGGREGATE SUBBASE COURSE-GRAVEL AND 4" CONCRETE UNLESS OTHERWISE NOTED IN THE PLANS OR DIRECTED BY THE RESIDENT.
7. THE CONTRACTOR SHALL COORDINATE WORK SUCH THAT INGRESS AND EGRESS TO ADJACENT BUSINESSES IS MAINTAINED.
8. ANY DAMAGE TO THE SLOPES OR SIDEWALKS CAUSED BY THE CONTRACTOR'S EQUIPMENT, PERSONNEL, OR OPERATION SHALL BE REPAIRED TO THE SATISFACTION OF THE RESIDENT. ALL WORK, EQUIPMENT, AND MATERIALS REQUIRED TO MAKE REPAIRS SHALL BE AT THE CONTRACTOR'S EXPENSE.
9. NO SEPARATE PAYMENT FOR SUPERINTENDENT OR FOREMAN WILL BE MADE FOR THE SUPERVISION OF EQUIPMENT BEING PAID FOR UNDER THE EQUIPMENT RENTAL ITEMS.
10. "UNDETERMINED LOCATIONS" SHALL BE DETERMINED BY THE RESIDENT.
11. STATIONS REFERENCED ARE APPROXIMATE.
12. ALL WORK SHALL BE DONE IN ACCORDANCE WITH THE MAINE DEPARTMENT OF TRANSPORTATION'S BEST MANAGEMENT PRACTICES FOR EROSION CONTROL & SEDIMENT CONTROL, FEBRUARY, 2008.
13. GRADING REQUIRED TO PLACE GRAVEL SHIM UNDER SIDEWALKS WILL BE CONSIDERED INCIDENTAL TO ITEM 411.10 UNTREATED AGGREGATE SURFACE COURSE.
14. REMOVAL OF BRICK PAVERS WILL BE PAID UNDER ITEM 202.11.
15. EXISTING GRANITE CURB TO BE REMOVED FROM THE PROJECT SHALL BE DELIVERED TO THE DOVER-FOXCROFT PUBLIC WORKS GARAGE ON ROUTE 7 AND STACKED. PAYMENT WILL BE MADE UNDER ITEM 609.441.
16. SAWCUTTING WILL BE CONSIDERED INCIDENTAL TO SECTION 202 PAY ITEMS.
17. ANY TRAFFIC AND PEDESTRIAN SIGNAL EQUIPMENT AND WORK REQUIRED TO PROVIDE A COMPLETE, SAFE AND OPERABLE SIGNAL SYSTEM THAT MAY NOT BE PAID AS SPECIFIC BID ITEMS WILL BE CONSIDERED TO BE INCIDENTAL TO THOSE PAY ITEMS.
18. EXISTING TRAFFIC SIGNAL HARDWARE TO REMAIN SHALL BE INSPECTED AND REPAIRED OR REPLACED IF NEEDED. PAYMENT WILL BE INCIDENTAL TO PAY ITEM 643.71.
19. THE CONTRACTOR SHALL INSTALL A SELF-CONTAINED METER SOCKET BYPASS (SINGLE-PHASE 100 OR 150 AMP) WITH A SINGLE HANDLE LEVER OPERATED BYPASS FOR POWER SHUTOFF TO THE METER WITHOUT INTERRUPTING SIGNAL DISPLAYS.
20. ALL FIELD WIRING SHALL BE NEATLY BUNDLED AND CLEARLY IDENTIFIED WITH PERMANENT, LEGIBLE, WEATHERPROOF TAGS THAT ARE SECURELY ATTACHED TO EACH CABLE.
21. THE CONTRACTOR SHALL NOTIFY THE APPRPRIATE UTILITY DEPARTMENT AT LEAST 48 HOURS IN ADVANCE OF SETTING OF PEDESTAL POLES OR OTHER OPERATIONS WHERE ANY POTENTIAL CONFLICT WITH OVERHEAD CONDUCTORS MAY OCCUR.
22. THE CONTRACTOR SHALL INSPECT THE SIGNAL CONTROLLER AND CABINET PRIOR TO BIDDING. THE CONTROLLER AND CABINET SHALL BE MODIFIED OR REPLACED IF NEEDED TO ACCOMMODATE THE PROPOSED PEDESTRIAN SIGNALS. PAYMENT WILL BE INCIDENTAL TO PAY ITEM 643.71.
23. THE MAINTENANCE OF SIGNALS SHALL REMAIN THE RESPONSIBILITY OF THE CONTRACTOR FROM THE TIME WORK BEGINS UNTIL FINAL ACCEPTANCE BY MAINEDOT.

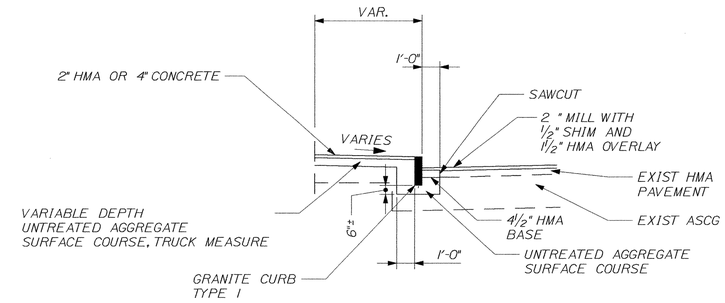

REBUILD SIDEWALK AND CURB
NTS

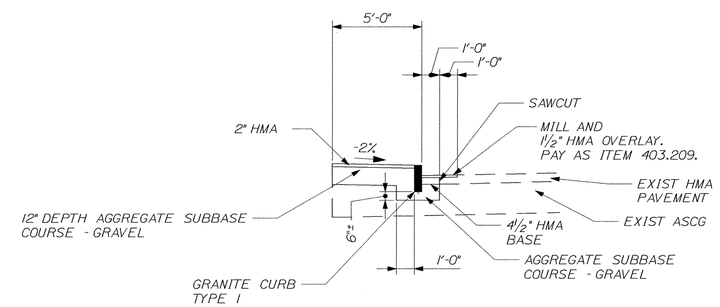

A.S.C.G. = 24.30 CY/100 LF

NEW SIDEWALK AND CURB
NTS

STATE OF MAINE
DEPARTMENT OF TRANSPORTATION

STP-1729(000)X

PIN 17290.00

HIGHWAY PLANS

STATE OF MAINE ALBERT L. CORSON No. 4226 LICENSED PROFESSIONAL ENGINEER

SIGNATURE 4226
P.E. NUMBER
MAY 5, 2010
DATE

PROJ. MANAGER	JIM MANSIR	BY	DATE
DESIGN-DETAILED	ALG	JLE	3-10
CHECKED-REVIEWED	ALG		5-10
DESIGN2-DETAILED2			
DESIGN3-DETAILED3			
REVISIONS 1			
REVISIONS 2			
REVISIONS 3			
REVISIONS 4			
FIELD CHANGES			

DOVER-FOXCROFT
ROUTE 15 / ROUTE 7
ESTIMATED QUANTITIES,
NOTES AND DETAILS

SHEET NUMBER
2
OF 4

Filename: ...\MSTA\002_Estimate_01.dgn Division: HIGHWAY Username: jeason Date:5/6/2010

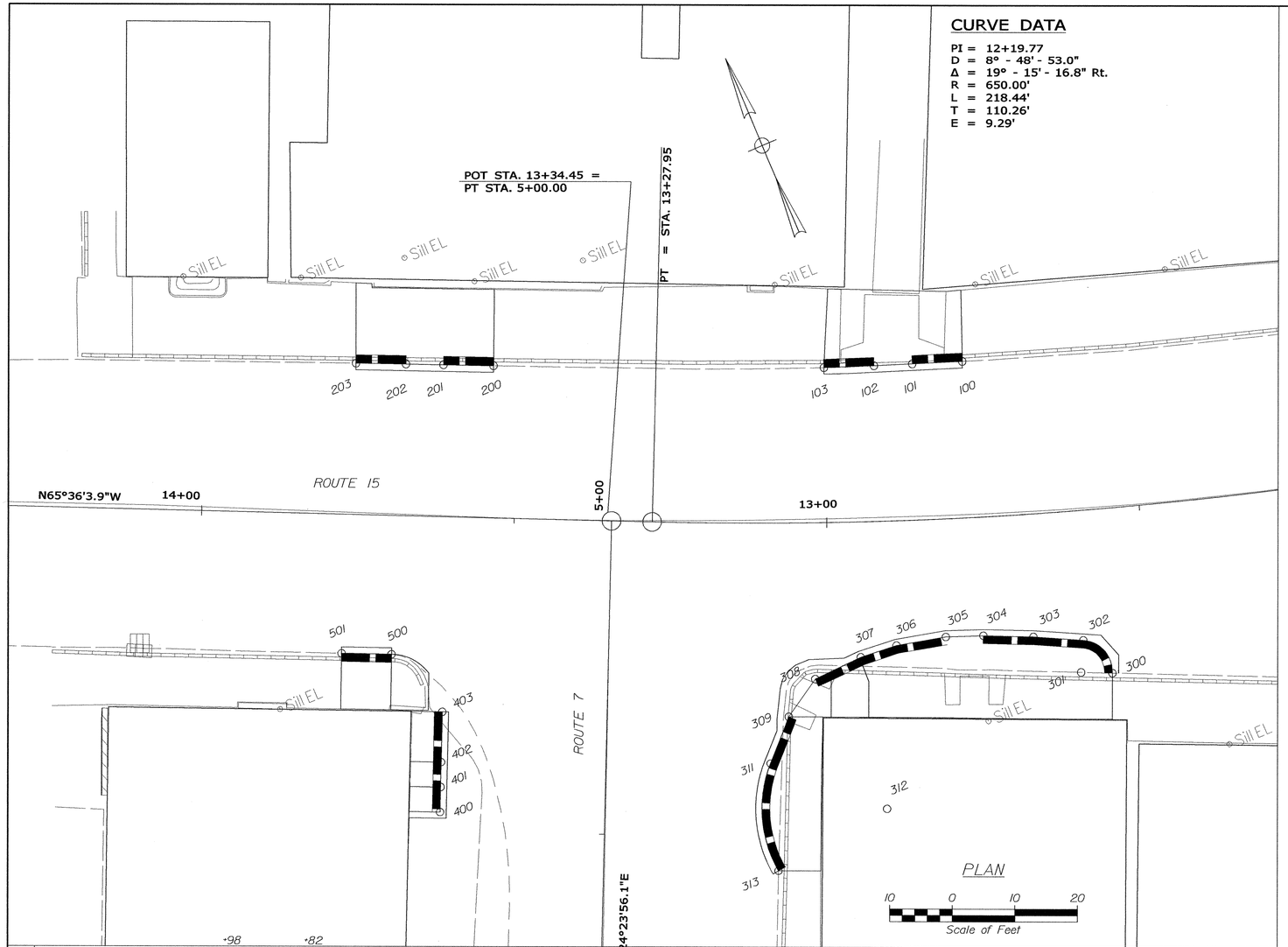

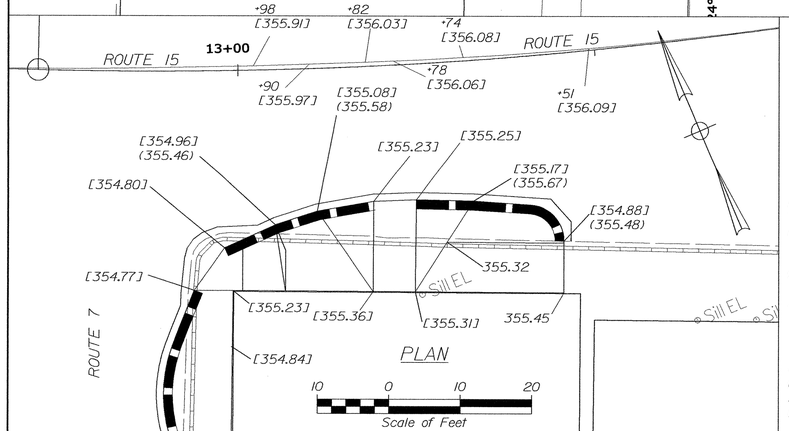

ELEVATION LEGEND

[XXX.XX] EXISTING SURFACE ELEVATION (TO BE MATCHED BY FINISH GRADE UNLESS NOTED)

(XXX.XX) PROPOSED ELEVATION TOP OF CURB

XXX.XX PROPOSED FINISH GRADE

* [EXIST.] GRADES BASED ON INTERPOLATION OF 3D TOPOGRAPHY PROVIDED BY MDOT JANUARY 13, 2010 VERIFY GRADES TO PROVIDE POSITIVE DRAINAGE.

Alignment Name:	1000			
	Point	Station	Northing	Easting
POB	100	0+00.00	613813.7090	1613730.7389
PI	101	0+08.00	613816.4948	1613723.2365
Tangential Direction:	N 69° 37'44.8" W	Tangential Length:	8.00	
PI	102	0+14.13	613818.6292	1613717.4885
Tangential Direction:	N 69° 37'44.8" W	Tangential Length:	6.13	
POE	103	0+22.13	613821.4921	1613710.0183
Tangential Direction:	N 69° 01'49.3" W	Tangential Length:	8.00	
Alignment Name:	1001			
	Point	Station	Northing	Easting
POB	200	0+00.00	613842.4765	1613661.5397
PI	201	0+08.00	613845.7486	1613654.2395
Tangential Direction:	N 65° 51'26.6" W	Tangential Length:	8.00	
PI	202	0+14.00	613848.2039	1613648.7616
Tangential Direction:	N 65° 51'26.6" W	Tangential Length:	6.00	
POE	203	0+22.00	613851.4539	1613641.4507
Tangential Direction:	N 66° 01'58.1" W	Tangential Length:	8.00	
Alignment Name:	1002			
	Point	Station	Northing	Easting
PC	300	0+00.00	613758.6137	1613733.3367
CC	301		613760.6800	1613728.7837
PT	302	0+07.63	613765.1362	1613731.0513
Radius:	5.00	Length:	7.63	
PI	303	0+15.62	613768.7575	1613723.9351
Tangential Direction:	N 63° 01'46.9" W	Tangential Length:	7.98	
PI	304	0+23.62	613772.0580	1613716.6477
Tangential Direction:	N 65° 38'00.8" W	Tangential Length:	8.00	
PI	305	0+29.61	613774.2259	1613711.0543
Tangential Direction:	N 68° 48'52.3" W	Tangential Length:	6.00	
PI	306	0+37.61	613776.0471	1613703.2643
Tangential Direction:	N 76° 50'29.2" W	Tangential Length:	8.00	
PI	307	0+43.62	613776.5791	1613697.2794
Tangential Direction:	N 84°55'15.4" W	Tangential Length:	6.01	
PI	308	0+51.62	613776.3740	1613689.2820
Tangential Direction:	S 88° 31'51.3" W	Tangential Length:	8.00	
PI	309	0+58.94	613772.5423	1613683.0498
Tangential Direction:	S 58° 24'57.2" W	Tangential Length:	7.32	
PC	311	0+66.94	613766.8273	1613677.4531
Tangential Direction:	S 44° 24'03.5" W	Tangential Length:	8.00	
CC	312		613752.8337	1613691.7423
PT	313	0+84.76	613750.5130	1613671.8774
Radius	20.00	Length:	17.82	
Alignment Name:	1003			
	Point	Station	Northing	Easting
POB	400	0+00.00	613780.3945	1613625.7721
PI	401	0+04.00	613784.0386	1613627.4214
Tangential Direction:	N 24° 21'05.5" E	Tangential Length:	4.00	
PI	402	0+08.00	613787.6827	1613629.0707
Tangential Direction:	N 24° 21'05.5" E	Tangential Length:	4.00	
POE	403	0+16.00	613794.9710	1613632.3694
Tangential Direction:	N 24° 21'05.5" E	Tangential Length:	8.00	
Alignment Name:	1004			
	Point	Station	Northing	Easting
Element: Linear				
POB	500	0+00.00	613806.4360	1613628.4402
POE	501	0+08.00	613809.6997	1613621.1363
Tangential Direction:	N 65° 55'21.6" W	Tangential Length:	8.00	

Point	Station	Offset	Northing	Easting
100	12+77.03	24.94	613813.7090	1613730.7389
101	12+85.35	24.94	613816.4948	1613723.2365
102	12+91.73	24.86	613818.6292	1613717.4885
103	13+00.04	24.76	613821.4921	1613710.0183
200	13+53.93	24.28	613842.4765	1613661.5397
201	13+61.93	24.23	613845.7486	1613654.2395
202	13+67.93	24.18	613848.2039	1613648.7616
203	13+75.93	24.10	613851.4539	1613641.4507
300	12+56.52	-26.26	613758.6137	1613733.3367
302	12+60.60	-20.79	613765.1362	1613731.0513
303	12+68.27	-19.68	613768.7575	1613723.9351
304	12+76.01	-19.01	613772.0580	1613716.6477
305	12+81.84	-18.91	613774.2259	1613711.0543
306	12+89.54	-19.98	613776.0471	1613703.2643
307	12+95.12	-21.67	613776.5791	1613697.2794
308	13+02.21	-24.85	613776.3740	1613689.2820
309	13+06.33	-30.77	613772.5423	1613683.0498
311	4+62.01	26.33	613766.8273	1613677.4531
312	4+55.17	45.12	613752.8337	1613691.7423
313	4+44.85	27.99	613750.5130	1613671.8774
400	4+53.02	-26.34	613780.3945	1613625.7721
401	4+57.02	-26.35	613784.0386	1613627.4214
402	4+61.02	-26.35	613787.6827	1613629.0707
403	4+69.02	-26.36	613794.9710	1613632.3694
500	13+69.07	-22.25	613806.4360	1613628.4402
501	13+77.07	-22.32	613809.6997	1613621.1363

STATE OF MAINE
DEPARTMENT OF TRANSPORTATION

STP-1729(000)X

PIN 17290.00

HIGHWAY PLANS

STATE OF MAINE
ALBERT L. COFFEY
No. 4226
LICENSED PROFESSIONAL ENGINEER

SIGNATURE

4226
P.E. NUMBER

MAY 5, 2010
DATE

	BY	DATE
PROJ. MANAGER	JIM MANSIR	
DESIGN-DETAILED	ALG	3-10
CHECKED-REVIEWED	ALG	5-10
DESIGN2-DETAILED2		
DESIGN3-DETAILED3		
REVISIONS 1		
REVISIONS 2		
REVISIONS 3		
REVISIONS 4		
FIELD CHANGES		

DOVER-FOXCROFT
ROUTE 15 / ROUTE 7

GEOMETRY PLAN

SHEET NUMBER
3
OF 4

Filename: ...\MSTA\003_Geometry_01.dgn Division: HIGHWAY Username: jeason Date:5/6/2010

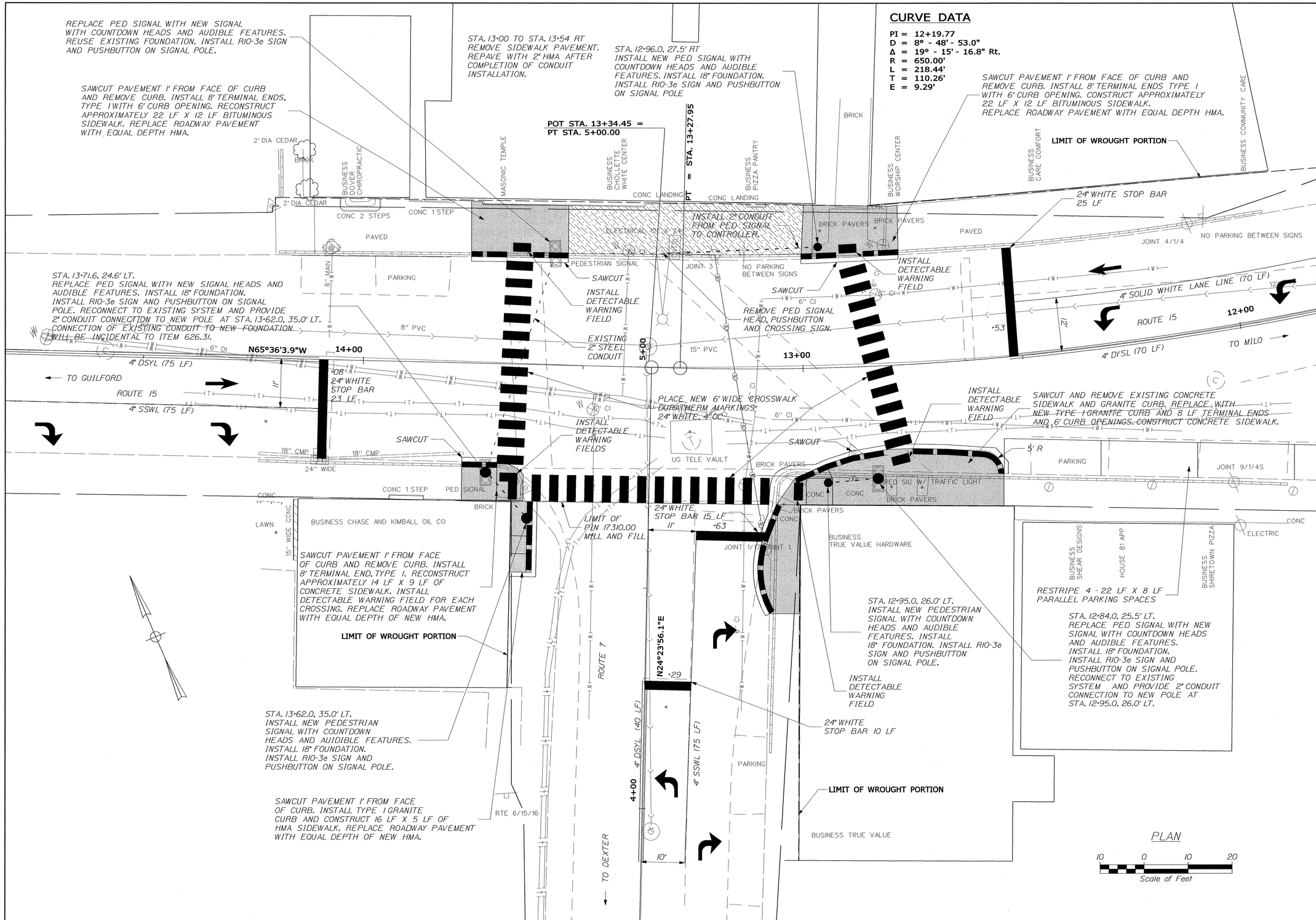

STATE OF MAINE
DEPARTMENT OF TRANSPORTATION

STP-1729(000)X

PIN 17290.00

HIGHWAY PLANS

STATE OF MAINE ALBERT L. GARDNER No. 4226 LICENSED PROFESSIONAL ENGINEER

SIGNATURE

4226 P.E. NUMBER

MAY 5, 2010 DATE

	BY	DATE
PROJ MANAGER	JIM MANSIR	
DESIGN-DETAILED	ALG	3-10
CHECKED-REVIEWED	ALG	5-10
DESIGN2-DETAILED2		
DESIGN3-DETAILED3		
REVISIONS 1		
REVISIONS 2		
REVISIONS 3		
REVISIONS 4		
FIELD CHANGES		

DOVER-FOXCROFT ROUTE 15 / ROUTE 7

PLANS

SHEET NUMBER

4

OF 4

Filename: ...\HIGHWAY\MSTA\004_Plan_01.dgn Division: HIGHWAY Username: jeason Date:5/6/2010

STATE OF MAINE
DEPARTMENT OF TRANSPORTATION

TMSI

PROJECT NO. STP-1759(700)X

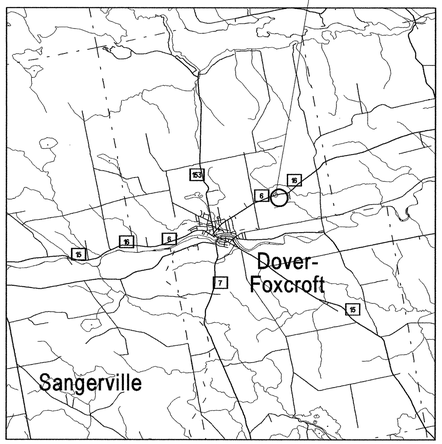

LOCATION MAP

A PORTION OF
PISCATAQUIS COUNTY

2 0 2 4
Scale in Miles

DOVER FOXCROFT

PISCATAQUIS

ROUTE 6 AND 16

STP-1759(700)X

PROJECT LENGTH : 0.000 MILES
FLASHING BEACON

INDEX OF SHEETS

Description	Sheet No.
Title Sheet	1
Plan	2-3

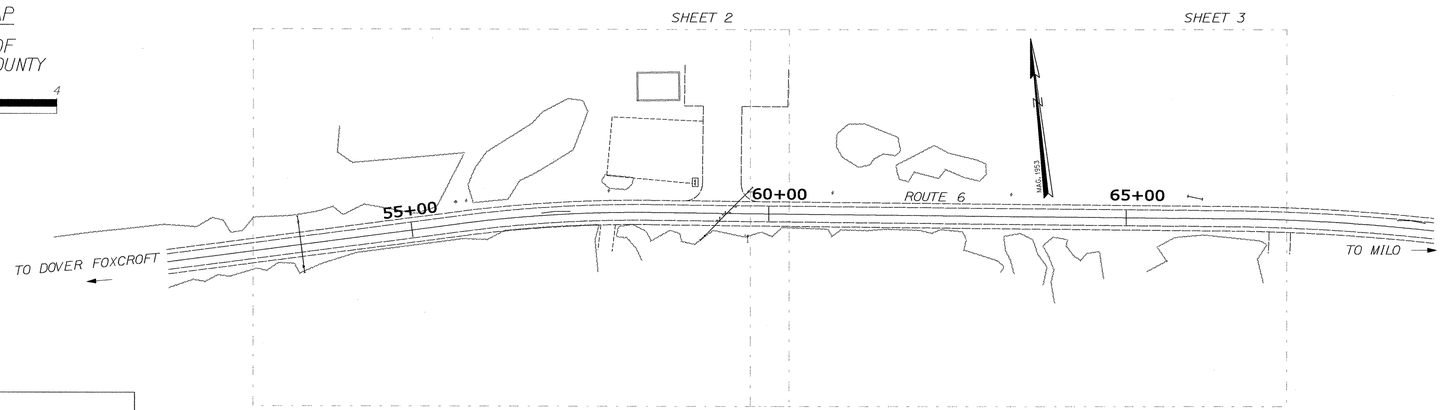

PLAN LEGEND

Town, County, State
Property Lines
R/W Lines-Existing
R/W Lines-Proposed

Culvert-Existing
Culvert Proposed

Curbing	Existing	Proposed
Type 1		
Type 3		
Type 5		

Outline of Bodies of Water
Ledge
Buildings

Trees — Conifer — Deciduous
Tree Line
Clearing Limit Line — CLL — CLL

Centerline-Existing
Centerline-Proposed — 10+00
Travelway-Existing
Travelway-Proposed
Railroad

Catch Basins — Existing ■ Proposed
Manholes — Existing ● Proposed
Proposed Underdrain
Proposed Ditch
Existing Ditch

Utility Poles — Existing ♦ Proposed
Fire Hydrants — Existing — Proposed
Existing Water Line
Existing San. Sewer
Existing San. Sewer Manhole

Guardrail-Existing
Guardrail-Proposed
Guardrail-Cable, Other

TRAFFIC DATA

Current (2010) AADT _ _ _ _ _ _ **4,320**
Design Speed (mph) _ _ _ _ _ _ _ _ **55**
Functional Class: _ _ _ **MINOR ARTERIAL**

LAYOUT SCALE

100 0 100 200
Scale in Feet

PROGRAM AREA: TRAFFIC
SCOPE OF WORK: FLASHING BEACON

STATE OF MAINE
DEPARTMENT OF TRANSPORTATION

APPROVED	DATE
COMMISSIONER:	5/17/10
CHIEF ENGINEER	5/17/10

STATE OF MAINE ALBERT L. GODFREY No. 4226 LICENSED PROFESSIONAL ENGINEER

SIGNATURE	
4226	P.E. NUMBER
TERRA MAGNA SERVICES, INC.	MAY 5, 2010
	DATE

PROJECT INFORMATION

PROGRAM	TRAFFIC
PROJECT MANAGER	JIM MANSIR
DESIGNER	AL GODFREY
CONSULTANT	TERRA MAGNA SERVICES, INC.
PROJECT RESIDENT	
CONTRACTOR	
PROJECT COMPLETION DATE	

PIN 17597.00

STP-1759(700)X

DOVER FOXCROFT
ROUTE 6

TITLE SHEET

SHEET NUMBER
1
OF 3

Filename: ...\HIGHWAY\MSTA\001_Title_001.dgn Division: HIGHWAY Username: jeason Date:5/6/2010

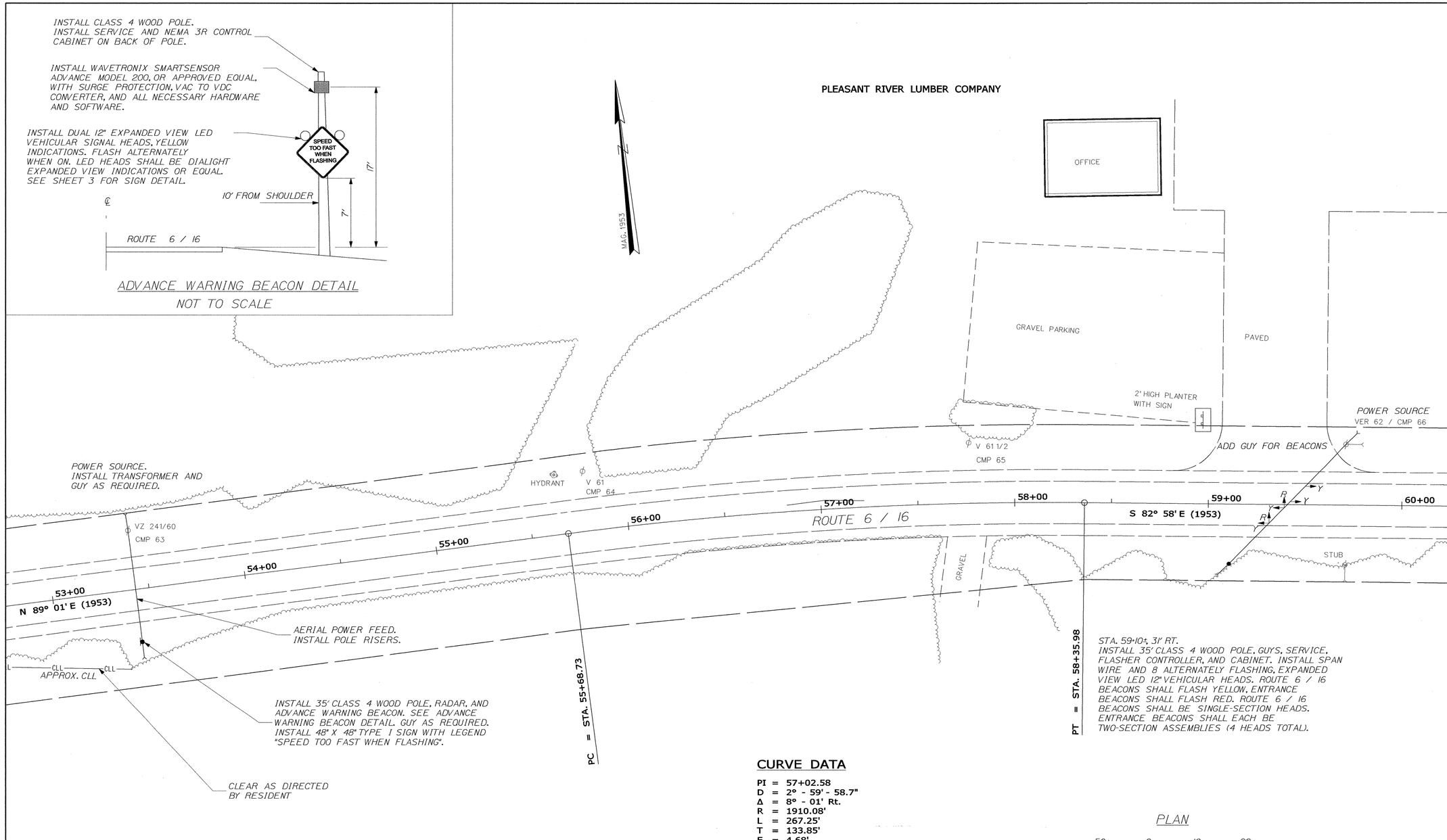

CURVE DATA

PI = 57+02.58
D = 2° - 59' - 58.7"
Δ = 8° - 01' Rt.
R = 1910.08'
L = 267.25'
T = 133.85'
E = 4.68'

RIGHT OF WAY REFERENCE

S.H.C. FILE NO. 11-22 DECEMBER 1953

STATE OF MAINE
DEPARTMENT OF TRANSPORTATION

STP-1759(700)X

PIN 17597.00

HIGHWAY PLANS

STATE OF MAINE
ALBERT L. GODFREY
No. 4226
PROFESSIONAL ENGINEER

SIGNATURE
4226
P.E. NUMBER
MAY 5, 2010
DATE

	BY	DATE
PROJ. MANAGER	JIM MANSIR	
DESIGN-DETAILED	ALG	2-11-10
CHECKED-REVIEWED	ALG	5-10
DESIGN2-DETAILED2		
DESIGN3-DETAILED3		
REVISIONS 1		
REVISIONS 2		
REVISIONS 3		
REVISIONS 4		
FIELD CHANGES		

DOVER FOXCROFT ROUTE 6

PLANS

SHEET NUMBER
2
OF 3

Filename: ...\HIGHWAY\MSTA\002_Plan_01.dgn Division: HIGHWAY Username: jeason Date:5/7/2010

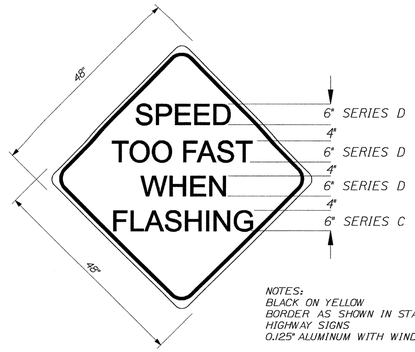

NOTES:
BLACK ON YELLOW
BORDER AS SHOWN IN STANDARD
HIGHWAY SIGNS.
0.125" ALUMINUM WITH WINDBARS

ADVANCE WARNING
SIGN DETAIL
NOT TO SCALE

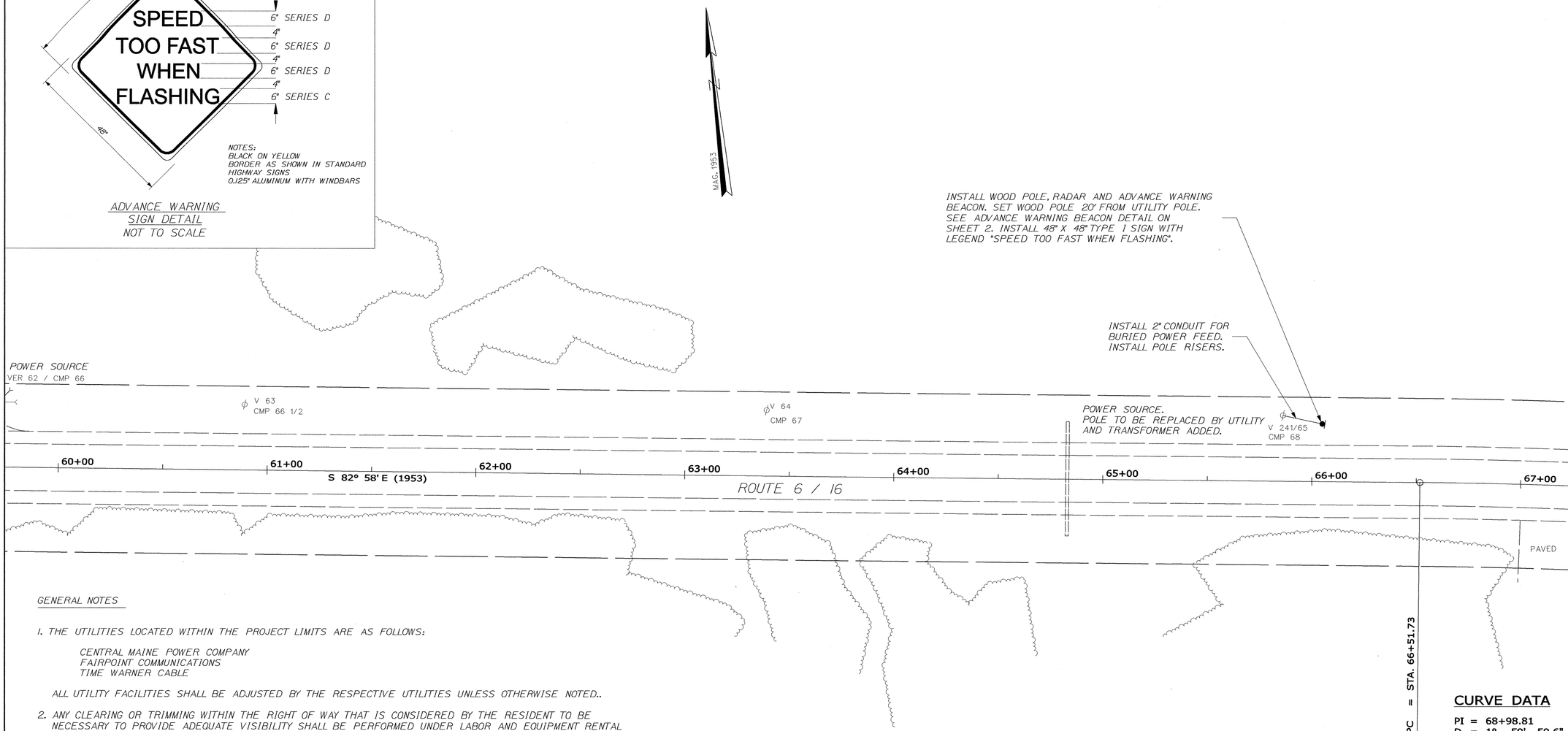

CURVE DATA

PI = 68+98.81
D = 1° - 59' - 59.6"
Δ = 9° -51' - 30 Rt.
R = 2864.94'
L = 492.33'
T = 247.08'
E = 10.63'

RIGHT OF WAY REFERENCE

S.H.C. FILE NO. 11-22 DECEMBER 1953

PLAN

50 0 10 20
Scale of Feet

GENERAL NOTES

1. THE UTILITIES LOCATED WITHIN THE PROJECT LIMITS ARE AS FOLLOWS:

   CENTRAL MAINE POWER COMPANY
   FAIRPOINT COMMUNICATIONS
   TIME WARNER CABLE

   ALL UTILITY FACILITIES SHALL BE ADJUSTED BY THE RESPECTIVE UTILITIES UNLESS OTHERWISE NOTED..

2. ANY CLEARING OR TRIMMING WITHIN THE RIGHT OF WAY THAT IS CONSIDERED BY THE RESIDENT TO BE NECESSARY TO PROVIDE ADEQUATE VISIBILITY SHALL BE PERFORMED UNDER LABOR AND EQUIPMENT RENTAL PAY ITEMS.

3. NO SEPARATE PAYMENT FOR SUPERINTENDENT OR FOREMAN WILL BE MADE FOR SUPERVISION OF EQUIPMENT BEING PAID FOR UNDER THE EQUIPMENT RENTAL ITEMS.

4. ANY DAMAGE TO SLOPES CAUSED BY THE CONTRACTOR'S EQUIPMENT, PERSONNEL, OR OPERATIONS SHALL BE REPAIRED TO THE SATISFACTION OF THE RESIDENT, WITH NO ADDITIONAL PAYMENT.

5. SOIL REMOVED FOR INSTALLATION OF WOOD POLES SHALL BE DISPOSED OF AT LOCATIONS APPROVED FOR DISPOSAL OF SUCH MATERIAL. DISTURBED AREAS SHALL BE SEEDED WITH SEEDING METHOD NO. 2 AND MULCHED. PAYMENT WILL BE CONSIDERED INCIDENTAL TO THE CONTRACT.

6. ALL WORK SHALL BE DONE IN ACCORDANCE WITH THE MAINE DEPARTMENT OF TRANSPORTATION'S BEST MANAGEMENT PRACTICES FOR EROSION CONTROL & SEDIMENT CONTROL, FEBRUARY, 2008. PAYMENT FOR TEMPORARY EROSION CONTROL MEASURES WILL BE INCIDENTAL TO THE CONTRACT.

7. PAYMENT UNDER ITEM 643.60 FOR FLASHING BEACONS SHALL INCLUDE, BUT IS NOT LIMITED TO, WOOD POLE, SERVICE AND METER, POLE RISER, POLE GUYS, GROUNDING, LED LAMPS, CONTROLLER, CABINET, POWER CONVERTER, CONTINUOUS TRACKING ADVANCE RADAR DETECTION SYSTEM, AND ALL APPURTENANCES AND INCIDENTALS NECESSARY FOR A COMPLETE FUNCTIONING INSTALLATION AT THE STATED LOCATION.

8. THE RADAR-ACTIVATED FLASHING BEACONS SHALL OPERATE AS FOLLOWS: WHEN A DETECTED VEHICLE IS TRAVELING AT 55 MPH OR MORE, THE FLASHING LIGHTS ON THE SIGN SHALL BE ACTIVATED AND FLASH FOR A PERIOD OF 12 SECONDS. ONLY THE SPEED OF APPROACHING VEHICLES WILL BE MEASURED. RADAR SHALL BE SET TO DETECT APPROACHING VEHICLES BETWEEN 100' AND 500' FROM THE DETECTOR.

9. EACH BEACON LOCATION SHALL BE SEPARATELY METERED.

10. YELLOW BEACON FACES AT THE PLEASANT RIVER LUMBER COMPANY ENTRANCE SHALL HAVE BACKPLATES.

11. MINIMUM CLEARANCE TO THE BOTTOM OF OVERHEAD BEACON HOUSING SHALL BE 16' ABOVE PAVEMENT.

12. RADAR DETECTION SHALL BE INDIVIDUALLY SURGE PROTECTED AND FUSED.

13. THE CONTRACTOR SHALL INSTALL A SELF-CONTAINED METER SOCKET BYPASS (SINGLE PHASE 100 OR 150 AMP) WITH A SINGLE HANDLE LEVER-OPERATED BYPASS FOR POWER SHUTOFF TO THE METER WITHOUT INTERRUPTING BEACON DISPLAYS.

14. ALL FIELD WIRING SHALL BE NEATLY BUNDLED AND CLEARLY IDENTIFIED WITH PERMANENT, LEGIBLE, WEATHERPROOF TAGS THAT ARE SECURELY ATTACHED TO EACH CABLE.

15. THE CONTRACTOR SHALL NOTIFY THE APPROPRIATE UTILITIES AT LEAST 48 HOURS IN ADVANCE OF POLE-SETTING OPERATIONS WHERE ANY POTENTIAL CONFLICT WITH OVERHEAD WIRES MAY OCCUR.

16. THE MAINTENANCE OF BEACONS SHALL REMAIN THE RESPONSIBILITY OF THE CONTRACTOR UNTIL FINAL ACCEPTANCE BY MAINEDOT.

STATE OF MAINE
DEPARTMENT OF TRANSPORTATION

STP-1759(700)X

PIN
17597.00

HIGHWAY PLANS

STATE OF MAINE
ALBERT L. GOFFER
No. 4226
LICENSED
PROFESSIONAL ENGINEER

SIGNATURE
4226
P.E. NUMBER
MAY 5, 2010
DATE

PROJ. MANAGER	JIM MANSIR	BY	DATE
DESIGN-DETAILED	ALG	ALE	2-11-10
CHECKED-REVIEWED	ALG		5-10
DESIGN2-DETAILED2			
DESIGN3-DETAILED3			
REVISIONS 1			
REVISIONS 2			
REVISIONS 3			
REVISIONS 4			
FIELD CHANGES			

DOVER FOXCROFT
ROUTE 6

PLANS

SHEET NUMBER
3
OF 3

Filename: ...\HIGHWAY\MSTA\003_Plan_02.dgn Division: HIGHWAY Username: jeason Date:5/7/2010