STATE OF MAINE
DEPARTMENT OF TRANSPORTATION

SPECIFICATIONS

Superstructure Design: Load and Resistance Factor Design per AASHTO LRFD Bridge Design Specifications, Fourth Edition 2007, supplemented by research from University of Maine

Substructure Design: Load and Resistance Factor Design per AASHTO LRFD Bridge Design Specifications, Fourth Edition 2007 and Interim Specifications through 2009.

DESIGN LOADING

Live Load ..... HL - 93 Modified

TRAFFIC DATA

Current (2010) AADT	350
Future (2030) AADT	490
DHV - % of AADT	16%
Design Hour Volume	78
Heavy Trucks (% of AADT)	6%
Heavy Trucks (% of DHV)	4%
Directional Distribution (% of DHV)	64%
18 kip Equivalent P 2.0	7
18 kip Equivalent P 2.5	7
Design Speed (mph)	25

HYDROLOGIC DATA

Drainage Area	24.05 sq mi
Design Discharge (Q50)	2214 cfs
Check Discharge (Q100)	2548 cfs
Headwater Elevation (Q50)	172.9 ft
Headwater Elevation (Q100)	173.7 ft
Discharge Velocity (Q50)	13.7 fps
Discharge Velocity (Q100)	14.2 fps
Headwater Elevation (Q1.1)	167.0 ft
Discharge Velocity (Q1.1)	8.1 fps
Headwater Elevation (Q25)	171.9 ft

MATERIALS

Concrete:

Seals	Class "S"
Arch Tube Concrete	See Special Provision
All Other	Class "A"
Reinforcing Steel	ASTM A 615/A 615M, Grade 60

BASIC DESIGN STRESSES

Concrete Class "A"	f 'c = 4,350 psi
Concrete Class "S"	f 'c = 2,900 psi
Arch Tube Concrete	f 'c = 6,000 psi
Reinforcing Steel	f y= 60,000 psi
H-Pile Steel: ASTM A 572, Grade 50	F y = 50,000 psi

UTILITIES

Fairpoint Communications

AUBURN
ANDROSCOGGIN COUNTY
ROYAL RIVER BRIDGE
OVER
ROYAL RIVER
OLD DANVILLE ROAD
AC-BR-1709(201)X
PROJECT LENGTH 0.057 mi.
BRIDGE REPLACEMENT
BRIDGE NO. 0077

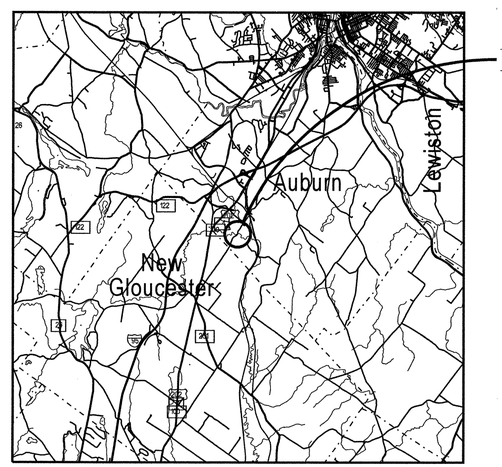

LOCATION MAP

2 0 2 4

Scale in Miles

LIST OF DRAWINGS

Title Sheet	1
Estimated Quantities and General Notes	2
Plan	3
Profile	4
Boring Location Plan	5
Interpretive Subsurface Profile	6
Boring Logs	7
Cross Sections	8-11
Composite Arch Plan and Sections	12
Abutment No. 1 Details	13
Abutment No. 2 Details	14
Wingwall Details	15
Composite Arch Details	16
Headwall Details	17
Detour Plan	18
R/W Plan	19

STATE OF MAINE
DEPARTMENT OF TRANSPORTATION

		DATE
APPROVED	COMMISSIONER:	4/1/10
	CHIEF ENGINEER:	4/1/10

STATE OF MAINE ZEYN BURHAN UZMAN 10095 LICENSED PROFESSIONAL ENGINEER

PROJECT INFORMATION			
PROGRAM	BRIDGE		
PROJECT MANAGER	N. BENOIT	SIGNATURE	
DESIGNER	T. MARSHALL	P.E. NUMBER	
CONSULTANT	S E A CONSULTANTS, INC.		
PROJECT RESIDENT		DATE	
CONTRACTOR			
PROJECT COMPLETION DATE			

PIN 17092.01

AC-BR-1709(201)X

AUBURN
ROYAL RIVER BRIDGE

TITLE SHEET

Engineering Seal applies to details within these plans related to the composite concrete arch superstructure

STATE OF MAINE ZEYN BURHAN UZMAN 10095 LICENSED PROFESSIONAL ENGINEER

S E A
SEA CONSULTANTS INC.
Scientists/Engineers/Architects

SHEET NUMBER
1
OF 19

Filename: ...\00\BRIDGE\MSTA\001_Title.dgn Division: BRIDGE Username: Dana.Drouin Date:3/29/2010

ESTIMATED QUANTITIES

Item	Description	Quantity	Unit
202.19	REMOVING EXISTING BRIDGE	1	LS
203.20	COMMON EXCAVATION	1200	CY
203.24	COMMON BORROW	10	CY
203.25	GRANULAR BORROW	390	CY
206.061	STRUCTURAL EXCAVATION - DRAINAGE AND MINOR STRUCTURES BELOW GRADE	10	CY
206.082	STRUCTURAL EARTH EXCAVATION - MAJOR STRUCTURES, PLAN QUANTITY	700	CY
304.10	AGGREGATE SUBBASE COURSE GRAVEL	850	CY
403.210	HOT MIX ASPHALT, 9.5 MM NOMINAL MAXIMUM SIZE	133	T
403.213	HOT MIX ASPHALT, 12.5 MM NOMINAL MAXIMUM SIZE, BASE	131	T
409.15	BITUMINOUS TACK COAT APPLIED	40	GAL
501.231	DYNAMIC LOADING TEST	2	EA
501.50	STEEL H-BEAM PILES (89 LB/FT), DELIVERED	490	LF
501.501	STEEL H-BEAM PILES (89 LB/FT), IN PLACE	350	LF
501.90	PILE TIPS	14	EA
501.92	PILE DRIVING EQUIPMENT MOBILIZATION	1	LS
502.21	STRUCTURAL CONCRETE, ABUTMENTS AND RETAINING WALLS	121	CY
502.22	STRUCTURAL CONCRETE, ABUTMENTS AND RETAINING WALLS (PLACED UNDERWATER)	185	CY
502.41	STRUCTURAL CONCRETE SUPERSTRUCTURE SLAB	34	CY
503.12	REINFORCING STEEL, FABRICATED AND DELIVERED	12200	LB
503.13	REINFORCING STEEL, PLACING	12200	LB
503.16	WELDED STEEL WIRE FABRIC, COMPLETE IN PLACE	1900	LB
508.13	MEMBRANE WATERPROOFING (175 SY)	1	LS
509.60	FIBERGLASS REINFORCED PLASTIC SHEATHING (200 SY)	1	LS
509.74	COMPOSITE ARCH SUPERSTRUCTURE ERECTION, INSTALLATION ONLY	1	LS
511.07	COFFERDAM - ABUTMENT NO. 1	1	LS
511.07	COFFERDAM - ABUTMENT NO. 2	1	LS
514.06	CURING BOX FOR CONCRETE CYLINDERS	1	EA
515.21	PROTECTIVE COATING FOR CONCRETE SURFACES (24 SY)	1	LS
526.30	TEMPORARY CONCRETE BARRIER, TYPE 1	60	LF
603.169	15 IN CULVERT PIPE OPTION III	56	LF
606.17	GUARDRAIL TYPE 3B	400	LF
606.21	GUARDRAIL TYPE 3B - 15' RADIUS AND LESS	25	LF
606.265	TERMINAL END-SINGLE RAIL - GALV STEEL	1	EA
606.353	REFLECTORIZED FLEXIBLE GUARDRAIL MARKER	8	EA
606.753	WIDEN SHOULDER FOR LOW VOLUME GUARDRAIL END - TYPE 3	2	EA
606.78	LOW VOLUME GUARDRAIL ENDS - TYPE 3	3	EA
609.31	CURB TYPE 3	155	LF
610.08	PLAIN RIPRAP	60	CY
610.16	HEAVY RIPRAP	525	CY
610.18	STONE DITCH PROTECTION	42	CY
613.319	EROSION CONTROL BLANKET	110	SY
615.07	LOAM	56	CY
618.1401	SEEDING METHOD NUMBER 2, PLAN QUANTITY	10	UN
618.1411	SEEDING METHOD NUMBER 3, PLAN QUANTITY	9	UN
619.1201	MULCH, PLAN QUANTITY	18	UN
619.1401	EROSION CONTROL MIX	112	CY
620.58	EROSION CONTROL GEOTEXTILE	125	SY
627.733	4 INCH WHITE OR YELLOW PAINTED PAVEMENT MARKING LINE	1640	LF
627.750	WHITE OR YELLOW PAVEMENT AND CURB MARKING	3	SF
629.05	HAND LABOR STRAIGHT TIME	40	HR
631.12	ALL PURPOSE EXCAVATOR (INCLUDING OPERATOR)	20	HR
631.14	GRADER (INCLUDING OPERATOR)	20	HR
631.15	ROLLER, EARTH AND BASE (INCLUDING OPERATOR)	20	HR
631.172	TRUCK-LARGE (INCLUDING OPERATOR)	20	HR
620.661	DRAINAGE GEOCOMPOSITE INSTALLATION	115	SY
635.14	PREFABRICATED CONCRETE MODULAR GRAVITY WALL	2200	SF
639.18	FIELD OFFICE, TYPE A	1	EA
652.31	TYPE I BARRICADES	10	EA
652.312	TYPE III BARRICADES	8	EA
652.33	DRUMS	20	EA
652.34	CONES	20	EA
652.35	CONSTRUCTION SIGNS	275	SF
652.361	MAINTENANCE OF TRAFFIC CONTROL DEVICES (160 CD)	1	LS
652.38	FLAGGERS	80	HR
656.75	TEMPORARY SOIL EROSION AND WATER POLLUTION	1	LS
659.10	MOBILIZATION	1	LS

GENERAL CONSTRUCTION NOTES

1. During construction, the road will be closed to traffic for a time period specified in the Special Provisions.

2. For easements, construction limits and right of way lines, refer to Right of Way Map.

3. The clearing limits as shown on the plans are approximate. The exact limits will be established in the field by the Resident. Payment for clearing will be considered incidental to Contract items.

4. All utility facilities shall be adjusted by the respective utilities unless otherwise noted.

5. Do not excavate for Aggregate Subbase Course where existing material is suitable as determined by the Resident.

6. In areas where the Resident directs the Contractor not to excavate to the subgrade line shown on the plans, payment for removing existing pavement, grubbing, shaping, ditching, and compacting the existing subbase and layers of new subbase 6 inches or less thick will be made under appropriate equipment rental items.

7. All embankment material, except as otherwise shown, placed below EL. 172.9 shall be Granular Borrow meeting the requirements of Subsection 703.19, Material for Underwater Backfill.

8. Place 4'-0" deep heavy riprap on sideslopes up to EL. 172.9 and 1'-0" deep plain riprap to top of slope as shown.

9. Stones which cannot be rolled or compacted into the surface of the shoulder shall be removed by hand raking. Payment for hand raking will be considered incidental to Item No. 304.10, Aggregate Subbase Course - Gravel.

10. Place loam 2 inches deep on all new or reconstructed sideslopes or as directed by the Resident.

11. Erosion Control Mix may be substituted in those areas normally receiving loam and seed as directed by the Resident. Placement shall be in accordance with Standard Specifications Section 619, Mulch. Payment will be made under Item No. 619.1401, Erosion Control Mix.

12. Place a 24-in. wide strip of Temporary Erosion Control Blanket on the sideslopes along the top of the riprap and behind the wingwalls and headwalls.

13. Guardrail posts as shown in the Standard Details shall be modified from the indicated length of 6 feet to a length of 7 feet with an embedment of 4.5 feet. Payment will be considered incidental to the guardrail pay items. Guardrail posts installed on the bridge between stations 5+17, LT and 5+34, LT along the upstream (west) side shall be 6 feet in length with an embedment of 3.5 feet.

14. A Low Volume Guardrail End shall be installed concurrently with the placement of each section of beam guardrail.

15. Extended-use Erosion Control Blanket, seeded gutters, riprap downspouts, and other gutters lined with Stone Ditch Protection shall be constructed after paving and shoulder work is completed, where it is apparent that runoff will cause continual erosion. Payment will be made under the appropriate Contract items.

16. Protective Coating for Concrete Surfaces shall be applied to the following areas:

Top of headwall and 24 inches below the top of the headwall on the fascia side.

17. Quantities included for pay items measured and paid for by Lump Sum are estimated quantities and are provided by MaineDOT for informational purposes only. Lump Sum pay items will be paid for at the Contract Bid amount, with no addition or reduction in payment to the Contractor if the actual final quantities are different from the MaineDOT provided estimated quantities, except as follows:

a. If a Lump Sum pay item is eliminated, the requirements of Standard Specifications Section 109.2, Elimination of Items, will take precedence.

b. If other Contract Documents specifically allow a change in payment for a Lump Sum pay item, those requirements will be followed.

c. If a design change results in changes to estimated quantities for Lump Sum pay items, price adjustments will be made in accordance with Standard Specifications Section 109.7, Equitable Adjustments to Compensation.

18. Two reflectorized flexible G.R. markers (Item 606.353) will be installed at each guardrail end.

19. Project information referred to below may be accessed at the following MaineDOT web address: http://www.maine.gov/mdot/comprehensive-list-projects/project-information.php.

20. The hydrologic report of the bridge site may be accessed at the MaineDOT web address. The hydrologic report is based on MaineDOT's interpretation of the information obtained for the subject site. No assurance is given that the information or the conclusions of the report will be representative of actual conditions at the time of construction.

21. The project geotechnical report titled "Geotechnical Design Report for the Replacement of Royal River Bridge over Royal River Auburn, Maine, December, 18, 2009" may be accessed at the MaineDOT web address.

22. Geotechnical information furnished or referred to in this plan set is for the use of the Bidders and the Contractor. No assurance is given that the information or interpretations will be representative of actual subsurface conditions at the construction site. MaineDOT will not be responsible for the Bidders' or Contractor's interpretations of, or conclusions drawn from, the geotechnical information. The boring logs contained in the plan set present factual and interpretive subsurface information collected at discrete locations. Data provided may not be representative of the subsurface conditions between the boring locations.

23. The existing bridge shall be removed by and become the property of the Contractor. The steel portions of the existing bridge are coated with a lead-based paint system. The Contractor is responsible for the containment, proper management and disposal of all lead-contaminated hazardous waste generated by the process of demolishing the bridge. The Contractor is responsible for implementing appropriate OSHA mandated personal protection standards related to this process. Once the existing bridge is removed, the Contractor is solely responsible for the care, custody and control of the components of the existing bridge and any hazardous waste generated as a result of the storage, recycling or disposal of the bridge components, including lead-coated steel. The Contractor shall recycle or reuse the steel in accordance with the Maine Department of Environmental Protection's "Maine Hazardous Waste Management Regulations," Chapter 850. A copy of this regulation is available at MaineDOT's offices on Child Street in Augusta. Payment for all labor, materials, equipment and other costs required to remove and dispose of the existing bridge will be considered incidental to the bridge removal pay item.

SEA
SEA CONSULTANTS INC.
Scientists/Engineers/Architects

STATE OF MAINE
DEPARTMENT OF TRANSPORTATION

AC-BR-1709(201)X

PIN 17092.01

BRIDGE NO. 0077

BRIDGE PLANS

PROJ. MANAGER	N. Benoit	BY	DATE
DESIGN-DETAILED	T. Marshall	D. Drouin	4\1\10
CHECKED-REVIEWED	K. Wood	P. Hetherly	
DESIGN2-DETAILED2			
DESIGN3-DETAILED3			
REVISIONS 1			
REVISIONS 2			
REVISIONS 3			
REVISIONS 4			
FIELD CHANGES			

SIGNATURE

P.E. NUMBER

DATE

ROYAL RIVER BRIDGE
ROYAL RIVER
AUBURN ANDROSCOGGIN COUNTY

ESTIMATED QUANTITIES
AND GENERAL NOTES

SHEET NUMBER
2
OF 19

Filename: ...\BRIDGE\MSTA\002_Estimate.dgn Division: BRIDGE Username: thomas.marshall Date:4/1/2010

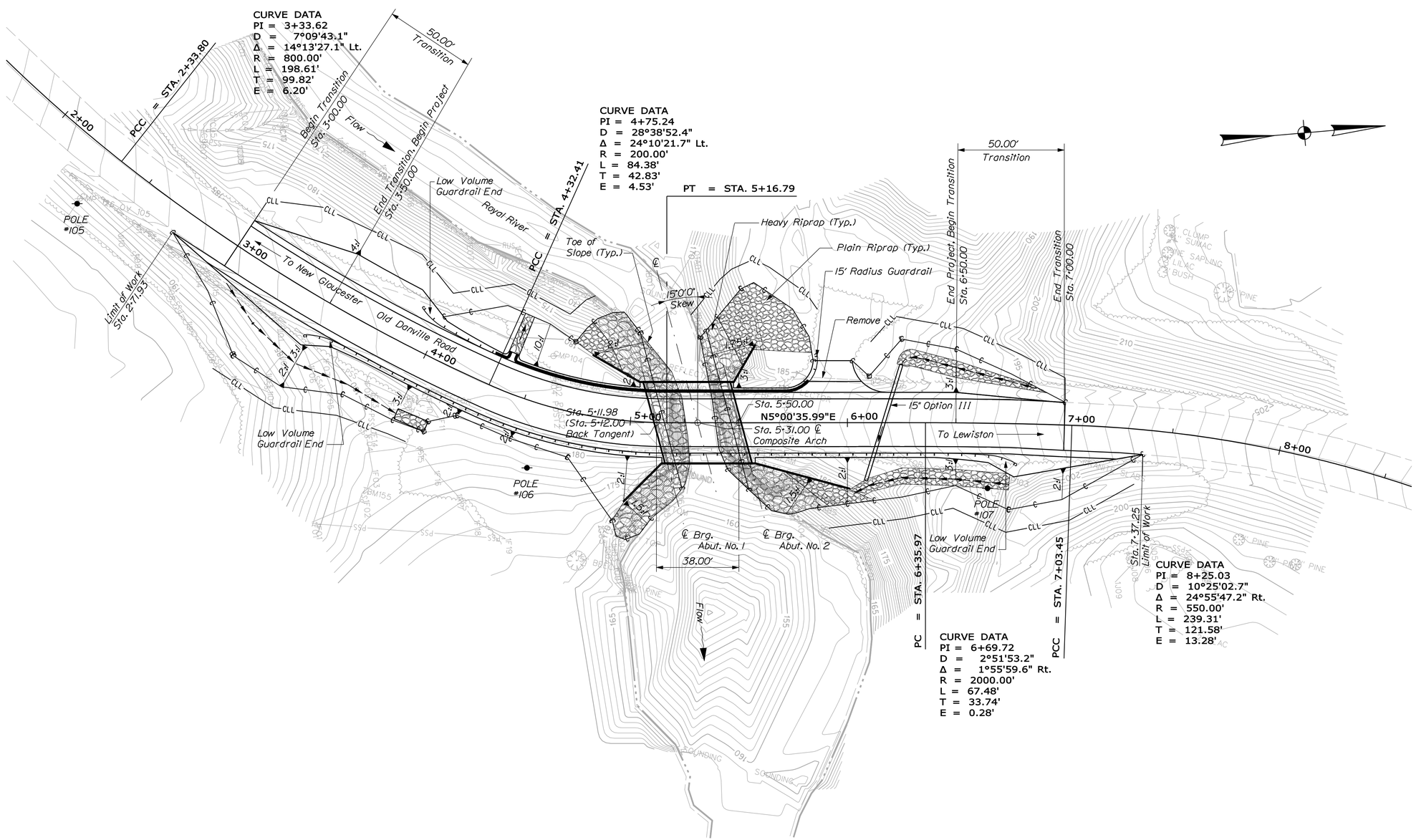

PLAN

25 0 25 50
Scale of Feet

Filename: ...\00\BRIDGE\MSTA\003_Plan.dgn Division: BRIDGE Username: Dana.Drouin Date:4/1/2010

STATE OF MAINE
DEPARTMENT OF TRANSPORTATION

AC-BR-1709(201)X

PIN 17092.01

BRIDGE NO. 0077

BRIDGE PLANS

PROJ. MANAGER	N. Benoit	BY	DATE
DESIGN-DETAILED	J. Blackburn	D. Drouin	
CHECKED-REVIEWED	K. Wood	P. Hetherly	4\1\10
DESIGN2-DETAILED2			
DESIGN3-DETAILED3			
REVISIONS 1			
REVISIONS 2			
REVISIONS 3			
REVISIONS 4			
FIELD CHANGES			

SIGNATURE

P.E. NUMBER

DATE

ROYAL RIVER BRIDGE
ROYAL RIVER
AUBURN ANDROSCOGGIN COUNTY

PLAN

SEA
SEA CONSULTANTS INC.
Scientists/Engineers/Architects

SHEET NUMBER
3
OF 19

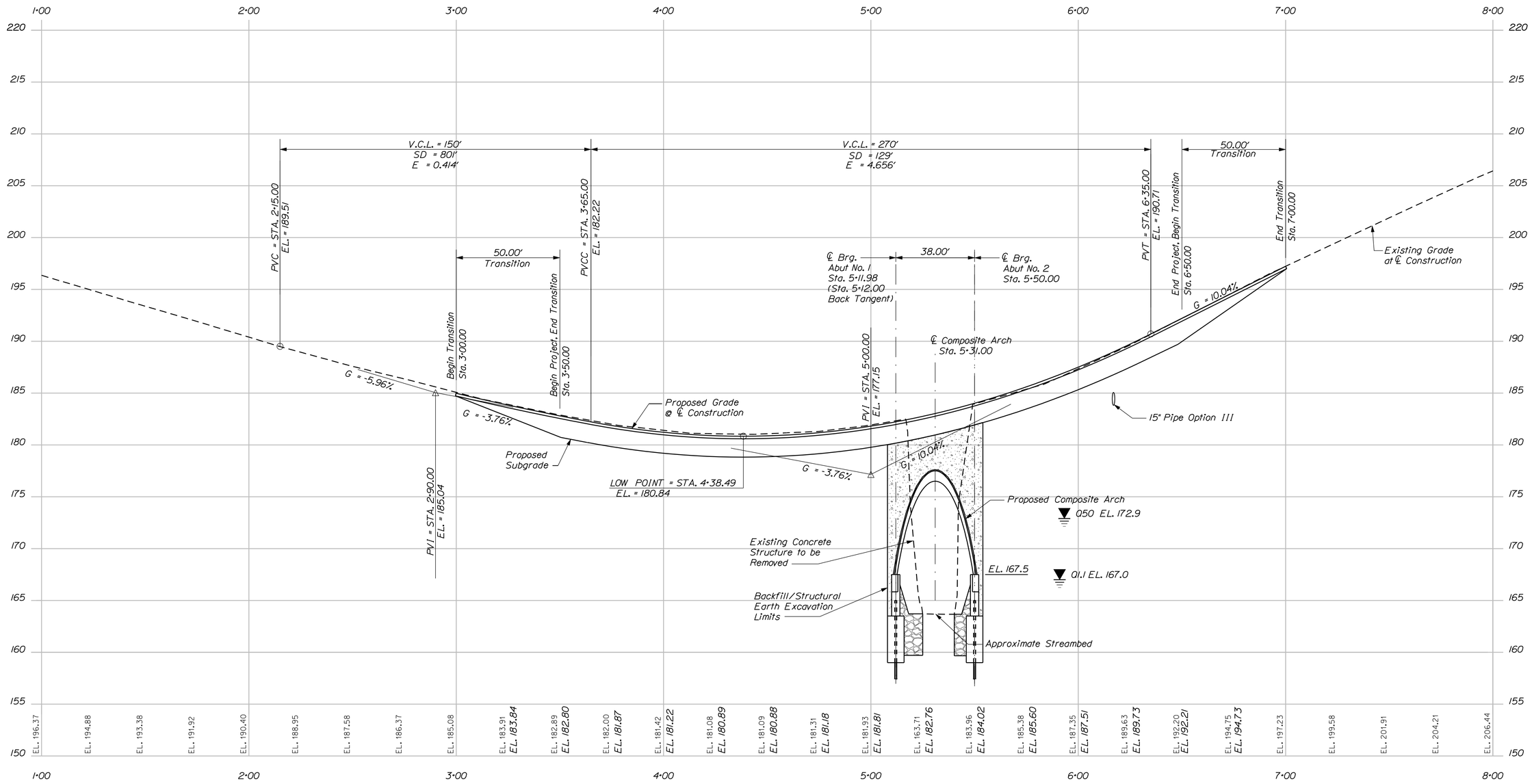

PROFILE

Horiz. 25 0 25 50

Vert. 5 0 5 10

Scale of Feet

Filename: ...\00\BRIDGE\MSTA\004_Profile.dgn Division: BRIDGE Username: Dana.Drouin Date:4/1/2010

STATE OF MAINE
DEPARTMENT OF TRANSPORTATION

AC-BR-1709(201)X

PIN 17092.01

BRIDGE NO. 0077

BRIDGE PLANS

		BY	DATE
PROJ. MANAGER	N. Benoit		
DESIGN-DETAILED	J. Blackburn	D. Drouin	4\1\10
CHECKED-REVIEWED	K. Wood	P. Hetherly	
DESIGN2-DETAILED2			
DESIGN3-DETAILED3			
REVISIONS 1			
REVISIONS 2			
REVISIONS 3			
REVISIONS 4			
FIELD CHANGES			

SIGNATURE

P.E. NUMBER

DATE

ROYAL RIVER BRIDGE
ROYAL RIVER
AUBURN ANDROSCOGGIN COUNTY

PROFILE

SEA
SEA CONSULTANTS INC.
Scientists/Engineers/Architects

SHEET NUMBER
4
OF 19

STATE OF MAINE
DEPARTMENT OF TRANSPORTATION

AC-BR-1709(201)X

PIN 17092.01

BRIDGE NO. 0077

BRIDGE PLANS

PROJ. MANAGER		BY	DATE
DESIGN-DETAILED	K. MAGUIRE	T. WHITE	OCT 2009
CHECKED-REVIEWED			
DESIGN2-DETAILED2			
DESIGN3-DETAILED3			
REVISIONS 1			
REVISIONS 2			
REVISIONS 3			
REVISIONS 4			
FIELD CHANGES			

SIGNATURE

P.E. NUMBER

DATE

ROYAL RIVER BRIDGE
ROYAL RIVER
AUBURN ANDROSCOGGIN COUNTY

BORING LOCATION PLAN

SHEET NUMBER

5

OF 19

Filename: ...\00\GEOTECH\MSTA\005_BLP1.dgn Division: BRIDGE Username: Dana.Drouin Date:3/30/2010

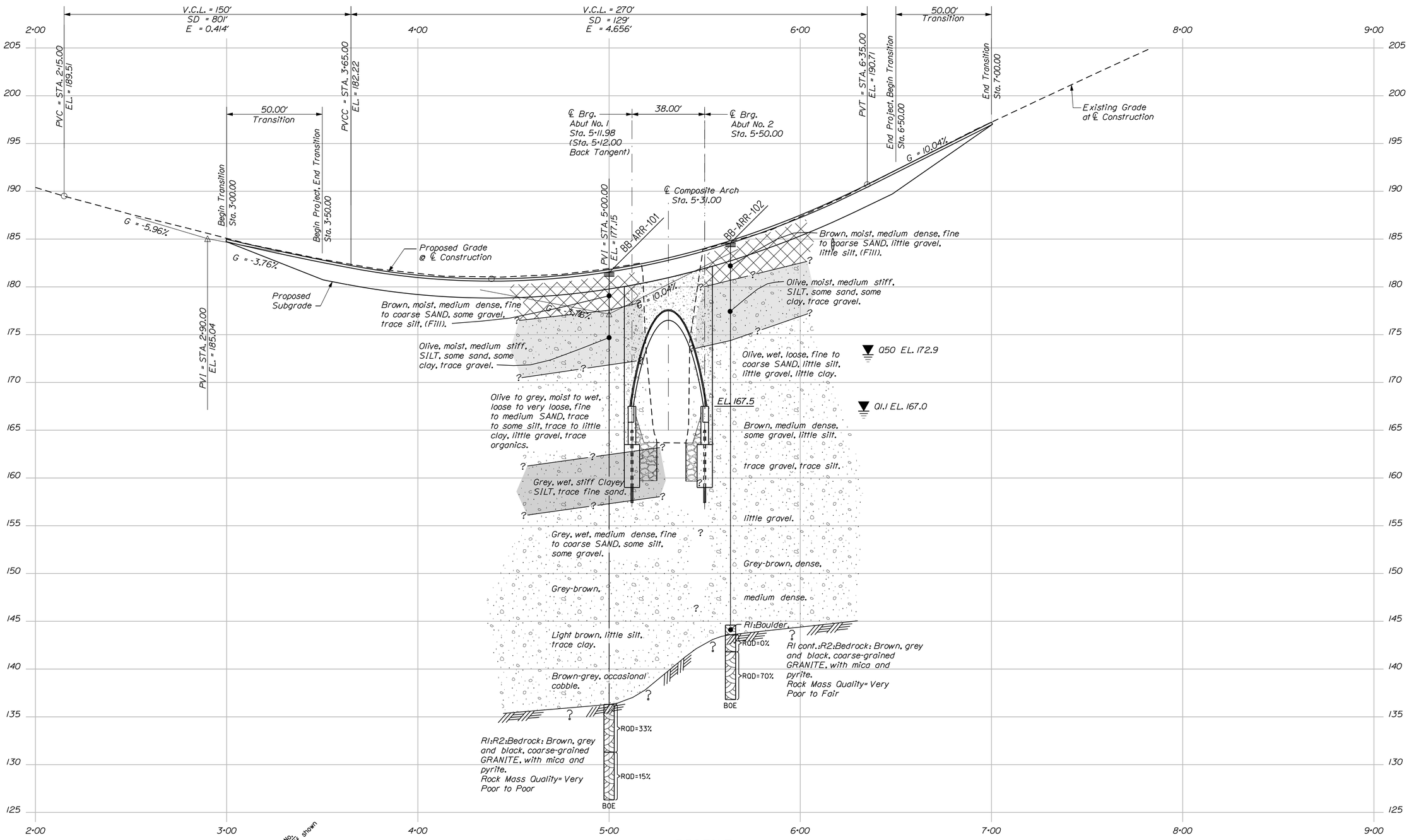

Boring No.
Offset, if shown
Strata Interface
Boring
ROD= Rock Quality Designation for Rock Core Sample
BOE= Bottom Of Exploration

PROFILE

HORIZ 25 0 25 50
VERT 5 0 5 10
SCALE

Note: This generalized interpretive soil profile is intended to convey trends in subsurface conditions. The boundaries between strata are approximate and idealized, and have been developed by interpretations of widely spaced explorations and samples. Actual soil transitions may vary and are probably more erratic. For more specific information refer to the exploration logs.

STATE OF MAINE
DEPARTMENT OF TRANSPORTATION

AC-BR-1709(201)X

PIN 17092.01

BRIDGE NO. 0077

BRIDGE PLANS

	BY	DATE
PROJ. MANAGER		
DESIGN-DETAILED	K. MAGUIRE	T. WHITE	OCT 2009
CHECKED-REVIEWED		
DESIGN2-DETAILED2		
DESIGN3-DETAILED3		
REVISIONS 1		
REVISIONS 2		
REVISIONS 3		
REVISIONS 4		
FIELD CHANGES		

SIGNATURE

P.E. NUMBER

DATE

ROYAL RIVER BRIDGE
ROYAL RIVER
AUBURN ANDROSCOGGIN COUNTY

INTERPRETIVE SUBSURFACE PROFILE

SHEET NUMBER
6
OF 19

Filename: ...\00\GEOTECH\MSTA\006_ISP1.dgn Division: BRIDGE Username: Dana.Drouin Date:3/30/2010

Filename: ...\MSTA\007_BORING LOGS1.dgn Division: BRIDGE Username: Dana.Drouin Date:3/29/2010

Maine Department of Transportation

Soil/Rock Exploration Log
US CUSTOMARY UNITS

Project: Bridge #0077 on Old Danville Road over Royal River.
Location: Auburn, Maine

Boring No.: BB-ARR-101
PIN: 17092.01

Driller:	MaineDOT	Elevation (ft.)	181.5	Auger ID/OD:	5" Solid Stem
Operator:	Giguere/Giles/Wright	Datum:	NAVD 88	Sampler:	Standard Split Spoon
Logged By:	B. Wilder	Rig Type:	CME 45C	Hammer Wt./Fall:	140#/30"
Date Start/Finish:	8/12/09; 07:00-14:00	Drilling Method:	Cased Wash Boring	Core Barrel:	NQ-2*
Boring Location:	5+00, 8.1 Lt.	Casing ID/OD:	HW	Water Level*:	17.0' bgs.
Hammer Efficiency Factor: 0.84		Hammer Type:	Automatic ☒ Hydraulic ☐ Rope & Cathead ☐		

Definitions:
D = Split Spoon Sample
MD = Unsuccessful Split Spoon Sample attempt
U = Thin Wall Tube Sample
MU = Unsuccessful Thin Wall Tube Sample attempt
V = Insitu Vane Shear Test, PP = Pocket Penetrometer, MDPC = weight of rods or casing
MV = Unsuccessful Insitu Vane Shear Test attempt, WOH = Weight of one person
R = Rock Core Sample
SSA = Solid Stem Auger
HSA = Hollow Stem Auger
RC = Roller Cone
WOH = weight of 140lb. hammer
S_u = Insitu Field Vane Shear Strength (psf)
T_v = Pocket Torvane Shear Strength (psf)
q_p = Unconfined Compressive Strength (ksf)
N-uncorrected = Raw field SPT N-value
Hammer Efficiency Factor = Annual Calibration Value
N_{60} = SPT N-uncorrected corrected for hammer efficiency
N_{60} = (Hammer Efficiency Factor/60%)*N-uncorrected
$S_{u(lab)}$ = Lab Vane Shear Strength (psf)
WC = water content, percent
LL = Liquid Limit
PL = Plastic Limit
PI = Plasticity Index
G = Grain Size Analysis
C = Consolidation Test

Depth (ft.)	Sample No.	Pen./Rec. (in.)	Sample Depth (ft.)	Blows (/6 in. Shear Strength (psf) or RQD (%))	N-uncorrected	N_{60}	Casing Blows	Elevation (ft.)	Visual Description and Remarks	Laboratory Testing Results/ AASHTO and Unified Class
0							SSA	181.10	Pavement. 0.40	
	10	24/16	1.00 - 3.00	6/7/7/8	14	20			Brown, moist, medium dense, fine to coarse SAND, some gravel, trace silt. (Fill).	GM246321 A-1-b, SW-SM WC=3.9%
								177.50	4.00	
5	20	24/15	5.00 - 7.00	2/3/3/3	6	8			Olive, moist, medium stiff, SILT, some sand, some clay, trace gravel.	GM246322 A-4, CL-ML WC=15.7%
10	30	24/14	10.00 - 12.00	2/3/3/5	6	8		171.50	10.00 Olive, moist, loose, fine to coarse SAND, some silt, little clay, little gravel.	GM246323 A-4, SC-SM WC=11.0%
15	40	24/22	15.00 - 17.00	WOH/WOH/WOH/WOH	---		57		Grey, wet, very loose, Silty fine to medium SAND, trace organics.	GM246324 A-4, SM WC=26.1%
							43			
							53			
							58			
							69	162.00	19.50	
20	50	24/18	20.00 - 22.00	6/1/1/1	2	3	47		Grey, wet, soft, Clayey SILT, trace fine sand.	GM246325 A-4, CL WC=28.7% LL=31 PL=19 PI=12
							33			
							33			
							31	157.50	24.00	
							41			
25	60	24/14	25.00 - 27.00	6/6/9/21	15	21	49		Grey, wet, medium dense, fine to coarse SAND, some silt, some gravel.	GM246326 A-2-4, SM WC=13.5%
							93			
							64			
							66			
							68			
30	70	24/6	30.00 - 32.00	16/13/6/6	19	27	45		Grey-brown, wet, medium dense, fine to coarse SAND, some silt, some gravel.	
							72			
							68			
							85			
							83			
35	80	24/10	35.00 - 37.00	5/5/6/7	11	15	79		Light brown, wet, medium dense, fine to coarse SAND, some gravel, trace silt.	GM246327 A-1-b, SW WC=11.3%
							88			
							90			
							122			
							135			
40	90	24/5	40.00 - 42.00	11/5/8/7	13	18	113		Brown-grey, wet, medium dense, fine to coarse SAND, some gravel, little silt, trace clay, occasional cobble.	
							129			
							128			
							166			
							238	136.30		
45	100 R1	2.4/2.4 80/61	45.00 - 45.20 45.00 - 50.20	30(2.4"), RQD = 33%	---		NQ-2		Brown, wet, fine to coarse SAND, some gravel, little silt, trace clay.	GM246328 A-2-4, SC-SM WC=11.3%
									45.20 Top of Bedrock at Elev. 136.3'. Bedrock: Brown, grey and black, coarse- grained GRANITE with mica and pyrite. Rock Mass Quality = Very Poor to Poor. R1:Core Times (min:sec) 45.2-46.2' (2:04) 46.2-47.2' (2:04) 47.2-48.2' (2:00) 48.2-49.2' (2:00) 49.2-50.2' (2:30) 95% Recovery R2:Core Times (min:sec) 50.2-51.2' (2:40) 51.2-52.2' (2:15) No water flow 52.2-53.2' (2:00) 53.2-54.2' (2:00) 54.2-55.2' (1:42) 100% Recovery	
50	R2	60/60	50.20 - 55.20	RQD = 15%						
								126.30	55.20 Bottom of Exploration at 55.20 feet below ground surface.	
55										
60										
65										
70										
75										

Remarks:
400-500 lbs down pressure on Core Barrel.

Stratification lines represent approximate boundaries between soil types; transitions may be gradual.

* Water level readings have been made at times and under conditions stated. Groundwater fluctuations may occur due to conditions other than those present at the time measurements were made.

Page 1 of 1
Boring No.: BB-ARR-101

Maine Department of Transportation

Soil/Rock Exploration Log
US CUSTOMARY UNITS

Project: Bridge #0077 on Old Danville Road over Royal River.
Location: Auburn, Maine

Boring No.: BB-ARR-102
PIN: 17092.01

Driller:	MaineDOT	Elevation (ft.)	184.6	Auger ID/OD:	5" Solid Stem
Operator:	Giguere/Giles/Wright	Datum:	NAVD 88	Sampler:	Standard Split Spoon
Logged By:	B. Wilder	Rig Type:	CME 45C	Hammer Wt./Fall:	140#/30"
Date Start/Finish:	9/3/09; 07:30-?	Drilling Method:	Cased Wash Boring	Core Barrel:	NQ-2*
Boring Location:	5+63.5, 3.6 Rt.	Casing ID/OD:	HW	Water Level*:	6.0' bgs.
Hammer Efficiency Factor: 0.84		Hammer Type:	Automatic ☒ Hydraulic ☐ Rope & Cathead ☐		

Definitions:
D = Split Spoon Sample
MD = Unsuccessful Split Spoon Sample attempt
U = Thin Wall Tube Sample
MU = Unsuccessful Thin Wall Tube Sample attempt
V = Insitu Vane Shear Test, PP = Pocket Penetrometer, MDPC = weight of rods or casing
MV = Unsuccessful Insitu Vane Shear Test attempt, WOH = Weight of one person
R = Rock Core Sample
SSA = Solid Stem Auger
HSA = Hollow Stem Auger
RC = Roller Cone
WOH = weight of 140lb. hammer
S_u = Insitu Field Vane Shear Strength (psf)
T_v = Pocket Torvane Shear Strength (psf)
q_p = Unconfined Compressive Strength (ksf)
N-uncorrected = Raw field SPT N-value
Hammer Efficiency Factor = Annual Calibration Value
N_{60} = SPT N-uncorrected corrected for hammer efficiency
N_{60} = (Hammer Efficiency Factor/60%)*N-uncorrected
$S_{u(lab)}$ = Lab Vane Shear Strength (psf)
WC = water content, percent
LL = Liquid Limit
PL = Plastic Limit
PI = Plasticity Index
G = Grain Size Analysis
C = Consolidation Test

Depth (ft.)	Sample No.	Pen./Rec. (in.)	Sample Depth (ft.)	Blows (/6 in. Shear Strength (psf) or RQD (%))	N-uncorrected	N_{60}	Casing Blows	Elevation (ft.)	Visual Description and Remarks	Laboratory Testing Results/ AASHTO and Unified Class
0							SSA	184.20	Pavement. 0.40	
	10	24/19	1.00 - 3.00	11/8/6/6	14	20			Brown, moist, medium dense, fine to coarse SAND, little gravel, little silt. (Fill).	GM246329 A-1-b, SM WC=6.0%
								180.60	4.00	
5	20	24/16	5.00 - 7.00	3/4/4/5	8	11			Olive, moist, medium stiff, SILT, some sand, some clay, trace gravel.	GM246330 A-4, CL-ML WC=15.3%
10	30	24/6	10.00 - 12.00	WOH/WOH/WOH/WOH	---		2	174.60	10.00 Olive, wet, very loose, fine to coarse SAND, little silt, little gravel, little clay.	GM246331 A-4, SC-SM WC=12.8%
							2			
							6			
							24			
							42			
15	40	24/8	15.00 - 17.00	12/11/9/11	20	28	7		Brown, wet, medium dense, fine to coarse SAND, some gravel, little silt.	GM246332 A-1-b, SM WC=5.5%
							30			
							43			
							43			
							42			
20	50	24/10	20.00 - 22.00	9/8/7/7	15	21	16		Brown, wet, medium dense, fine to coarse SAND, trace gravel, trace silt.	GM246333 A-1-b, SW-SM WC=12.8%
							30			
							38			
							30			
							33			
25	60	24/11	25.00 - 27.00	13/7/7/10	14	20	19		Brown, wet, medium dense, fine to coarse SAND, little gravel, trace silt.	GM246334 A-1-b, SW WC=14.4%
							31			
							40			
							52			
							67			
30	70	24/12	30.00 - 32.00	21/14/18/12	32	45	30		Grey-brown, wet, dense, fine to coarse SAND, little gravel, trace silt.	
							48			
							62			
							50			
							64			
35	80	24/12	35.00 - 37.00	22/12/14/11	26	36	37		Similar to above, medium dense.	
							66			
							49			
							36			
							100			
40	R1	33.6/ 33.6	40.00 - 42.80	RQD = 0%			NQ-2	144.60	40.00 R1:Boulder from 40.0-41.0' bgs. R1:Core Times (min:sec) 40.0-41.0' (1:50)	
								143.60	41.00 Top of Bedrock at Elev. 143.6'. Bedrock: Brown, grey and black, coarse grained GRANITE with mica and pyrite. Rock Mass Quality = Very Poor to Fair. R2:Core Times (min:sec) 41.0-42.0' (2:55) 42.0-42.8' (5:30) 100% Recovery Core Blocked R2:Core Times (min:sec) 42.8-43.8' (3:00) No water return 43.8-44.8' (3:00) 44.8-45.8' (1:50) 45.8-46.8' (2:00) 46.8-47.8' (1:40) 97% Recovery	
45	R2	60/58	42.80 - 47.80	RQD = 70%						
								136.80	47.80 Bottom of Exploration at 47.80 feet below ground surface.	
50										
55										
60										
65										
70										
75										

Remarks:
100-200 lbs down pressure on Core Barrel.

Stratification lines represent approximate boundaries between soil types; transitions may be gradual.

* Water level readings have been made at times and under conditions stated. Groundwater fluctuations may occur due to conditions other than those present at the time measurements were made.

Page 1 of 1
Boring No.: BB-ARR-102

STATE OF MAINE
DEPARTMENT OF TRANSPORTATION

AC-BR-1709(201)X

PIN 17092.01

BRIDGE NO. 0077

BRIDGE PLANS

PROJ. MANAGER		BY	DATE
DESIGN-DETAILED	K. MAGUIRE	T. WHITE	OCT 2009
CHECKED-REVIEWED			
DESIGN2-DETAILED2			SIGNATURE
DESIGN3-DETAILED3			P.E. NUMBER
REVISIONS 1			
REVISIONS 2			DATE
REVISIONS 3			
REVISIONS 4			
FIELD CHANGES			

ROYAL RIVER BRIDGE
ROYAL RIVER
AUBURN ANDROSCOGGIN COUNTY

BORING LOGS

SHEET NUMBER
7
OF 19

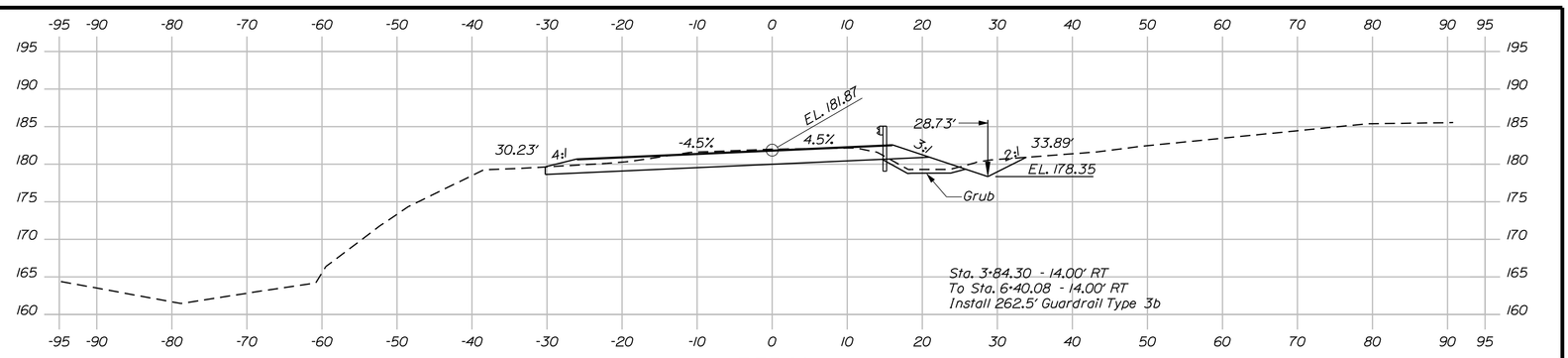

3+75.00

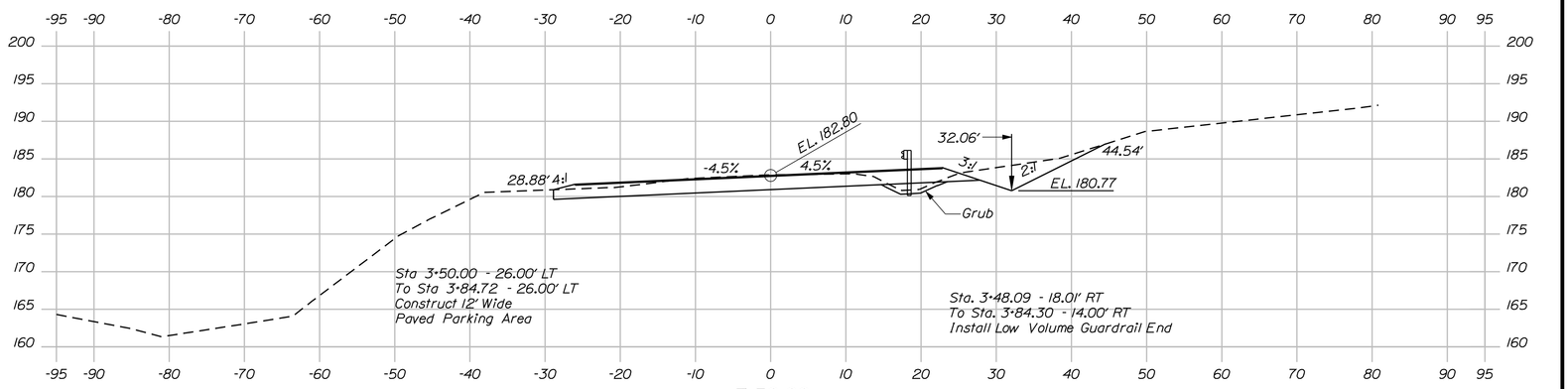

3+50.00

End Transition - Begin Project Sta. 3+50.00

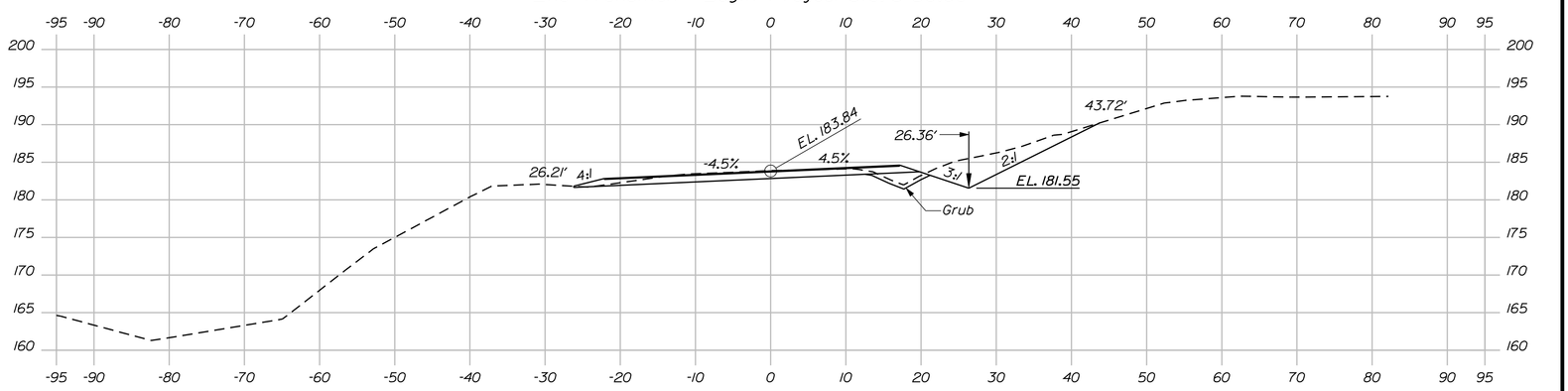

3+25.00

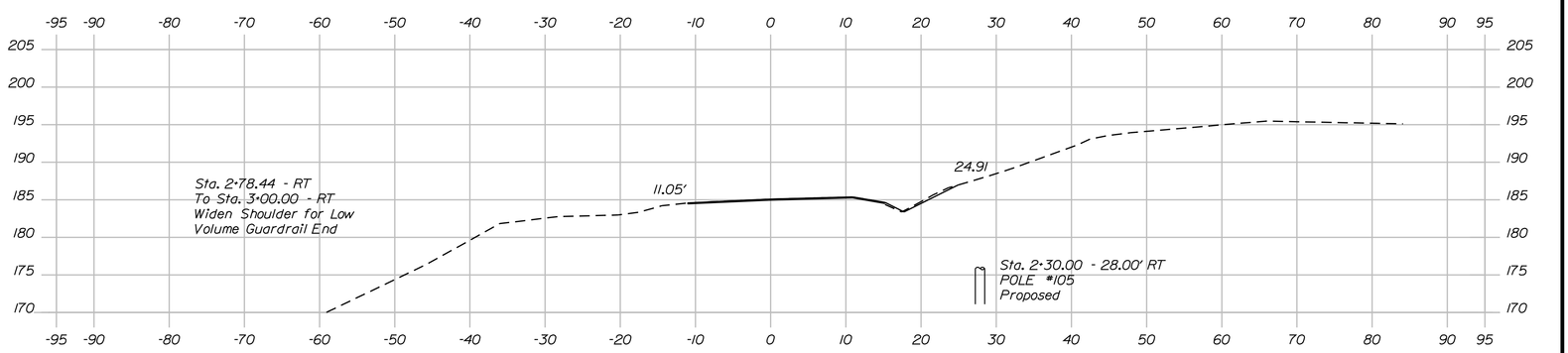

3+00.00

Begin Transition - Match Existing Sta. 3+00.00

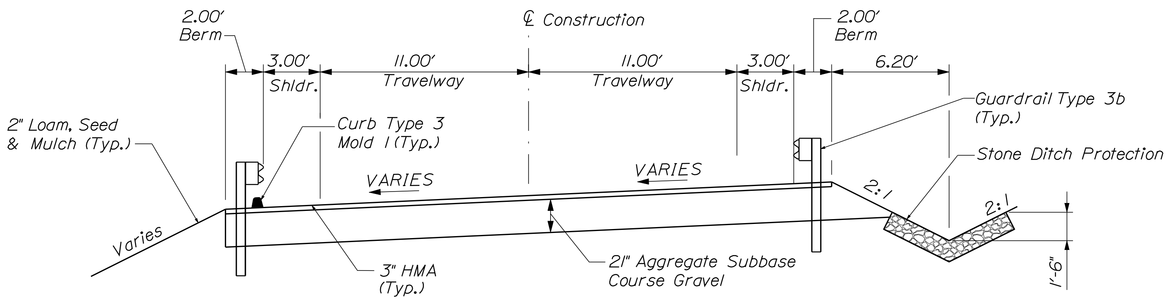

TYPICAL GUARDRAIL SECTION

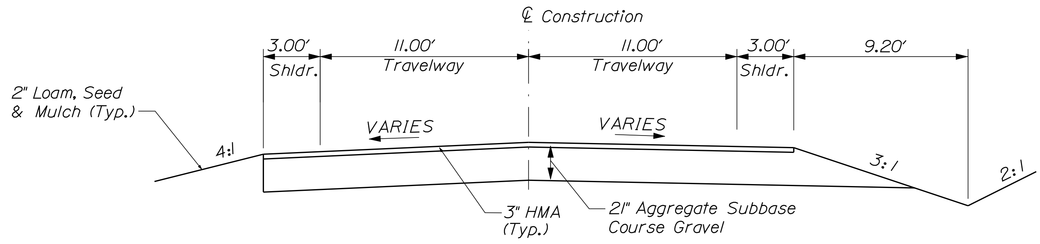

TYPICAL BOX SECTION

SEA CONSULTANTS INC. Scientists/Engineers/Architects

Sta. 3+00.00 to Sta. 3+75.00

SHEET NUMBER 8 OF 19

ROYAL RIVER BRIDGE
ROYAL RIVER
AUBURN ANDROSCOGGIN COUNTY

CROSS SECTIONS

PROJ. MANAGER	N. Benoit	BY	DATE
DESIGN-DETAILED	J. Blackburn	D. Drouin	
CHECKED-REVIEWED	K. Wood	P. Hetherly	4\1\10
DESIGN2-DETAILED2			
DESIGN3-DETAILED3			
REVISIONS 1			
REVISIONS 2			
REVISIONS 3			
REVISIONS 4			
FIELD CHANGES			

SIGNATURE
P.E. NUMBER
DATE

STATE OF MAINE
DEPARTMENT OF TRANSPORTATION
AC-BR-1709(201)X
BRIDGE NO. 0077 PIN 17092.01 BRIDGE PLANS

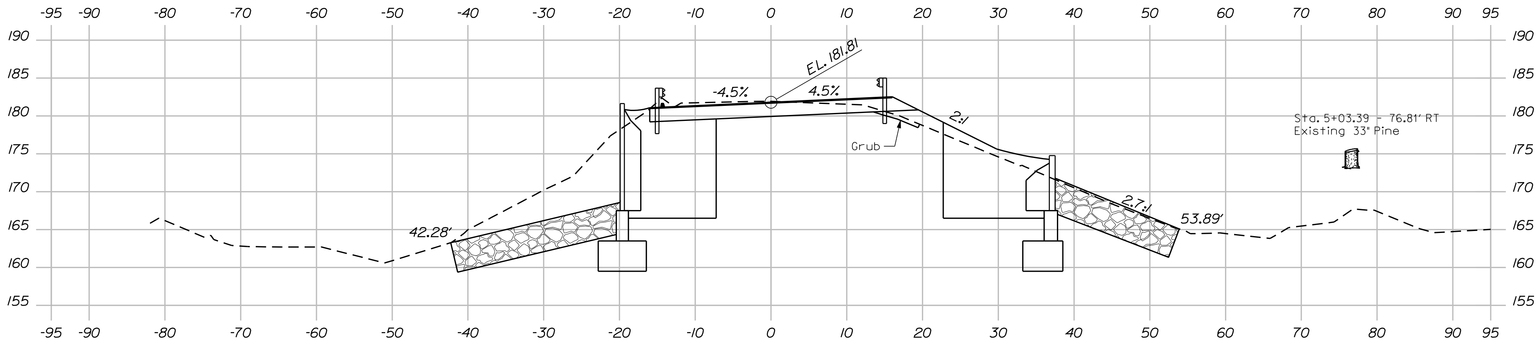

5+00.00

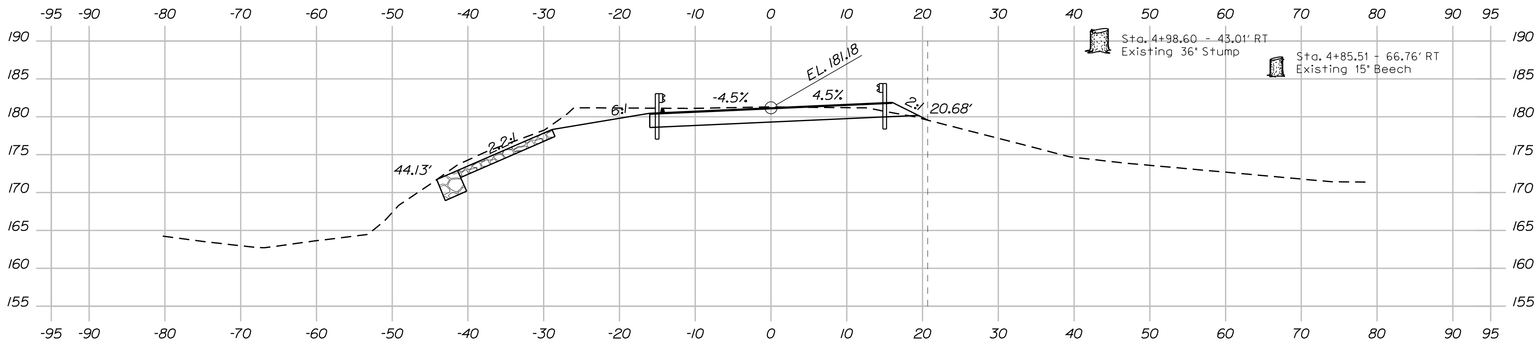

4+75.00

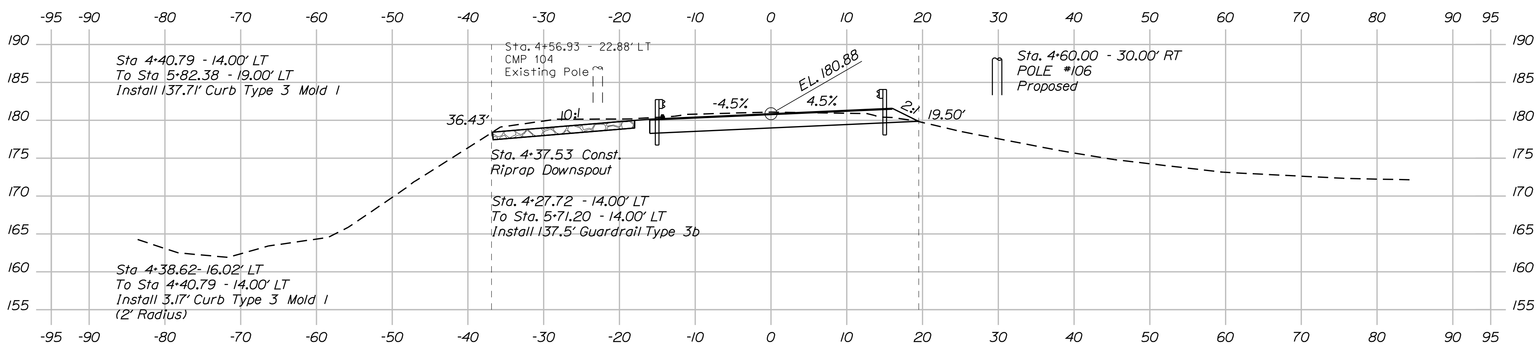

4+50.00

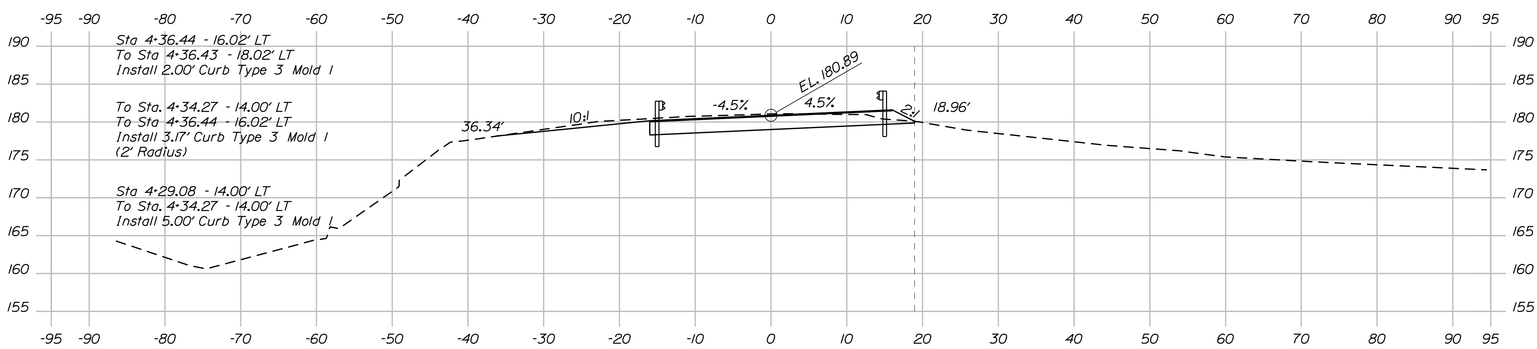

4+25.00

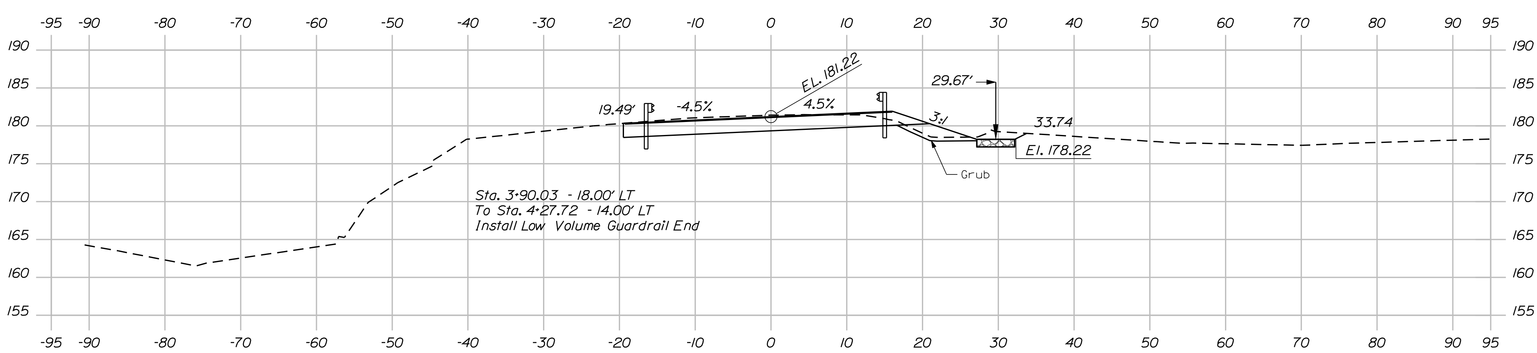

4+00.00

Sta. 4+00.00 to Sta. 5+00.00

SEA CONSULTANTS INC.
Scientists/Engineers/Architects

SHEET NUMBER 9 OF 19

ROYAL RIVER BRIDGE
ROYAL RIVER
AUBURN ANDROSCOGGIN COUNTY

CROSS SECTIONS

PROJ. MANAGER	N. Benoit	BY	DATE
DESIGN-DETAILED	J. Blackburn	D. Drouin	
CHECKED-REVIEWED	K. Wood	P. Hetherly	4\1\10
DESIGN2-DETAILED2			
DESIGN3-DETAILED3			
REVISIONS 1			
REVISIONS 2			
REVISIONS 3			
REVISIONS 4			
FIELD CHANGES			

SIGNATURE
P.E. NUMBER
DATE

STATE OF MAINE
DEPARTMENT OF TRANSPORTATION
AC-BR-1709(201)X
BRIDGE NO. 0077 PIN 17092.01 BRIDGE PLANS

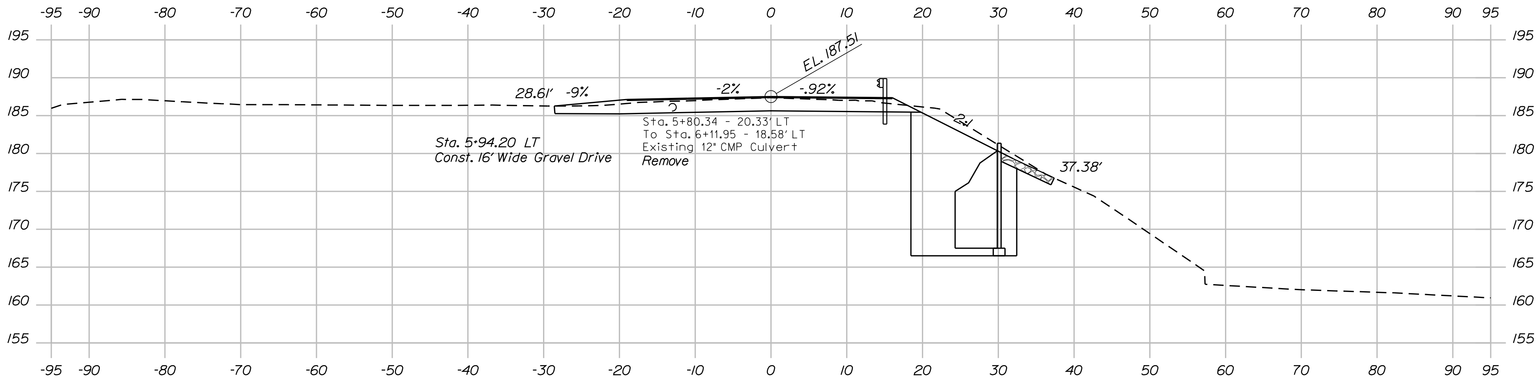

6+00.00

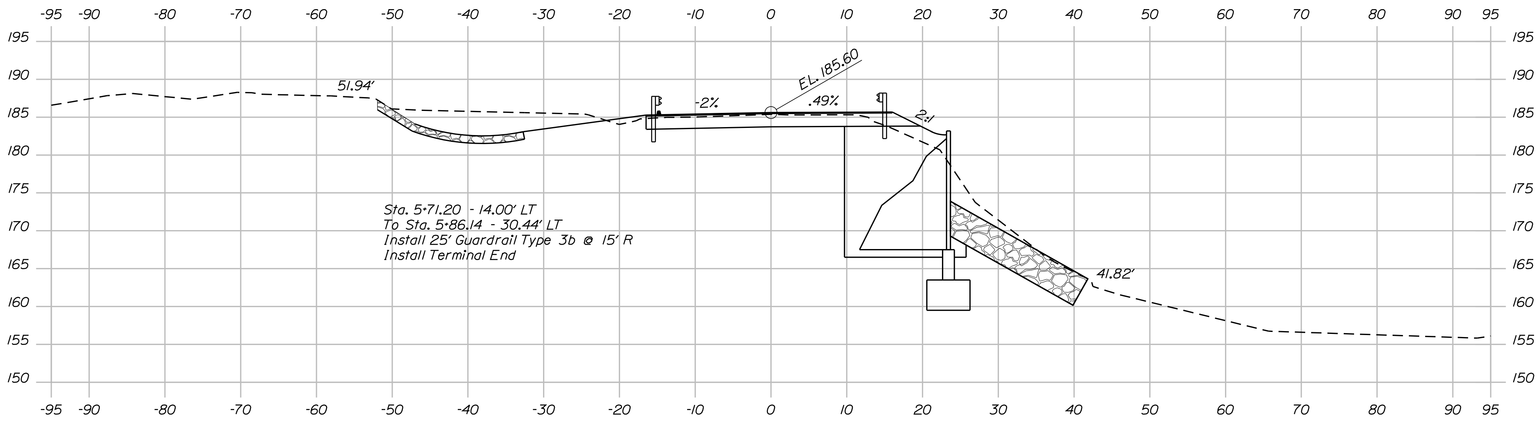

5+75.00

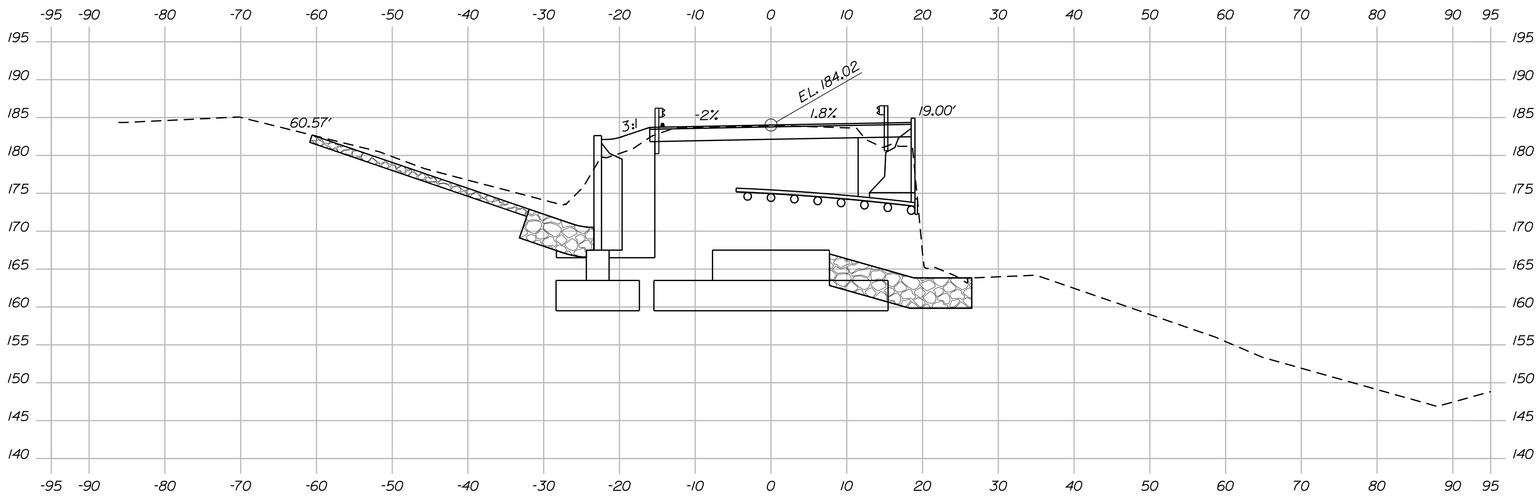

5+50.00

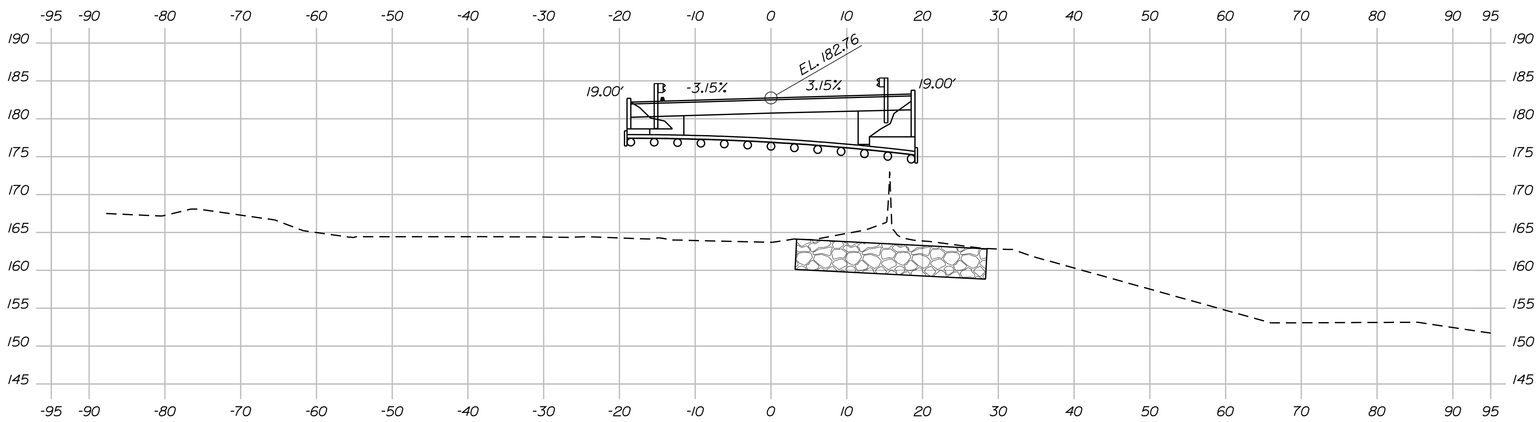

5+25.00

SEA CONSULTANTS INC.
Scientists/Engineers/Architects

Sta. 5+25.00 to Sta. 6+00.00

SHEET NUMBER 10 OF 19

ROYAL RIVER BRIDGE
ROYAL RIVER
AUBURN ANDROSCOGGIN COUNTY

CROSS SECTIONS

PROJ. MANAGER	N. Benoit	BY	DATE
DESIGN-DETAILED	J. Blackburn	D. Drouin	
CHECKED-REVIEWED	K. Wood	P. Hetherly	4\1\10
DESIGN2-DETAILED2			
DESIGN3-DETAILED3			
REVISIONS 1			
REVISIONS 2			
REVISIONS 3			
REVISIONS 4			
FIELD CHANGES			

SIGNATURE
P.E. NUMBER
DATE

STATE OF MAINE
DEPARTMENT OF TRANSPORTATION

AC-BR-1709(201)X

BRIDGE NO. 0077 PIN 17092.01 BRIDGE PLANS

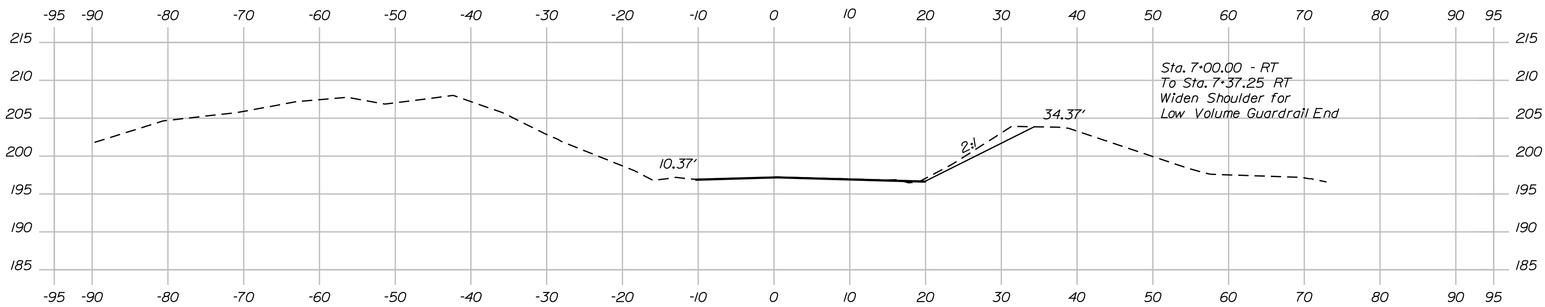

7+00.00
End Transition - Match Existing Sta. 7+00.00

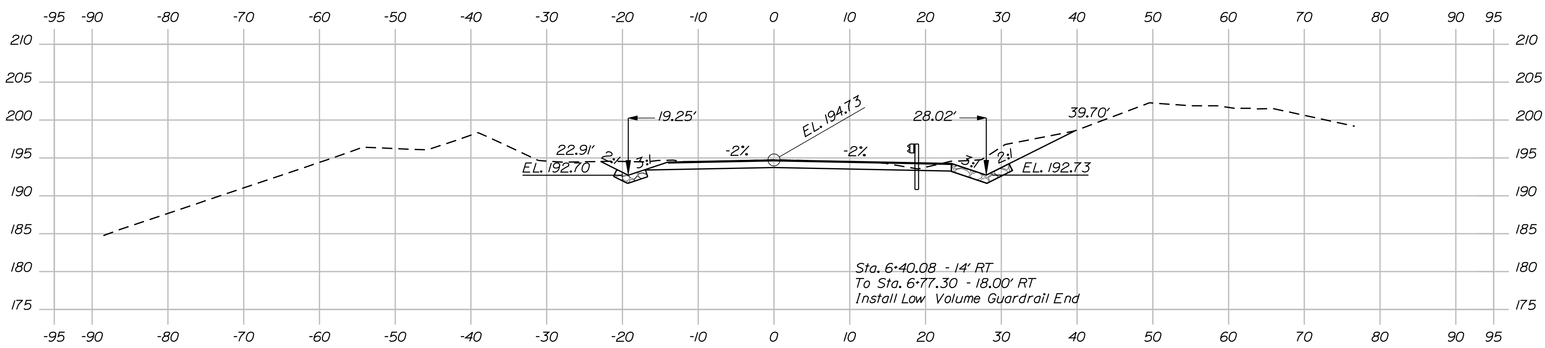

6+75.00

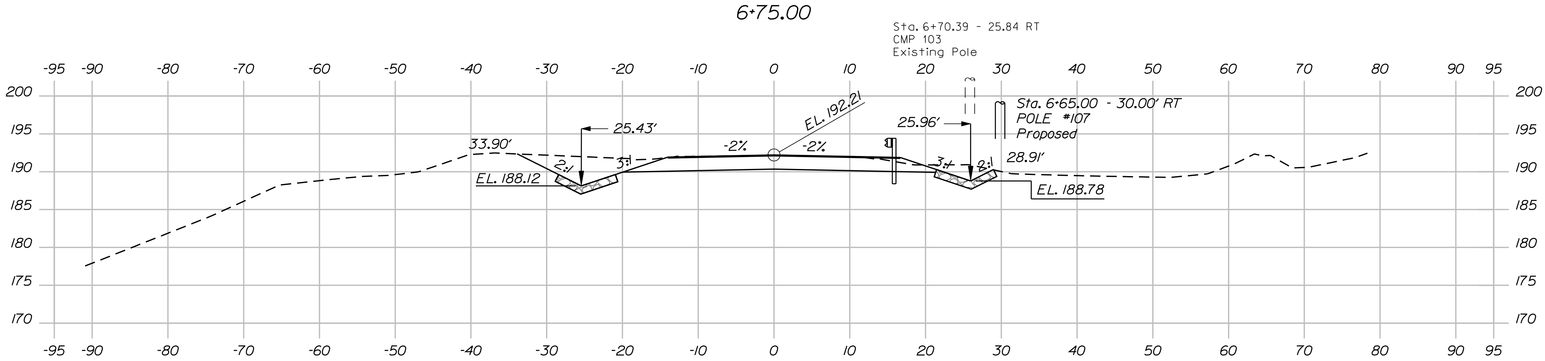

6+50.00
End Project - Begin Transition Sta. 6+50.00

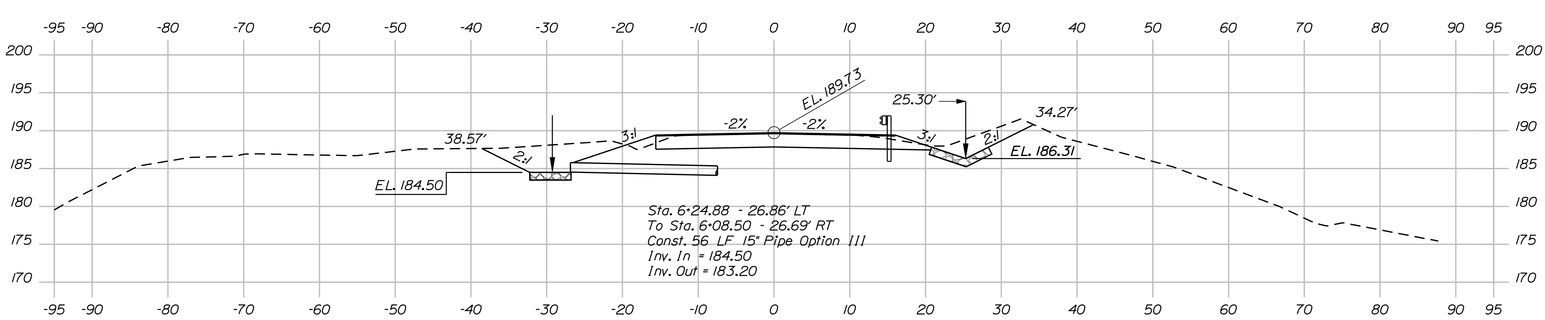

6+25.00

Sta. 6+25.00 to Sta. 7+00.00

SEA CONSULTANTS INC.
Scientists/Engineers/Architects

SHEET NUMBER 11 OF 19

ROYAL RIVER BRIDGE
ROYAL RIVER
AUBURN ANDROSCOGGIN COUNTY

CROSS SECTIONS

PROJ. MANAGER	N. Benoit	BY	DATE
DESIGN-DETAILED	J. Blackburn	D. Drouin	
CHECKED-REVIEWED	K. Wood	P. Hetherly	4\1\10
DESIGN2-DETAILED2			
DESIGN3-DETAILED3			
REVISIONS 1			
REVISIONS 2			
REVISIONS 3			
REVISIONS 4			
FIELD CHANGES			

SIGNATURE
P.E. NUMBER
DATE

STATE OF MAINE
DEPARTMENT OF TRANSPORTATION
AC-BR-1709(201)X
BRIDGE NO. 0077 PIN 17092.01 BRIDGE PLANS

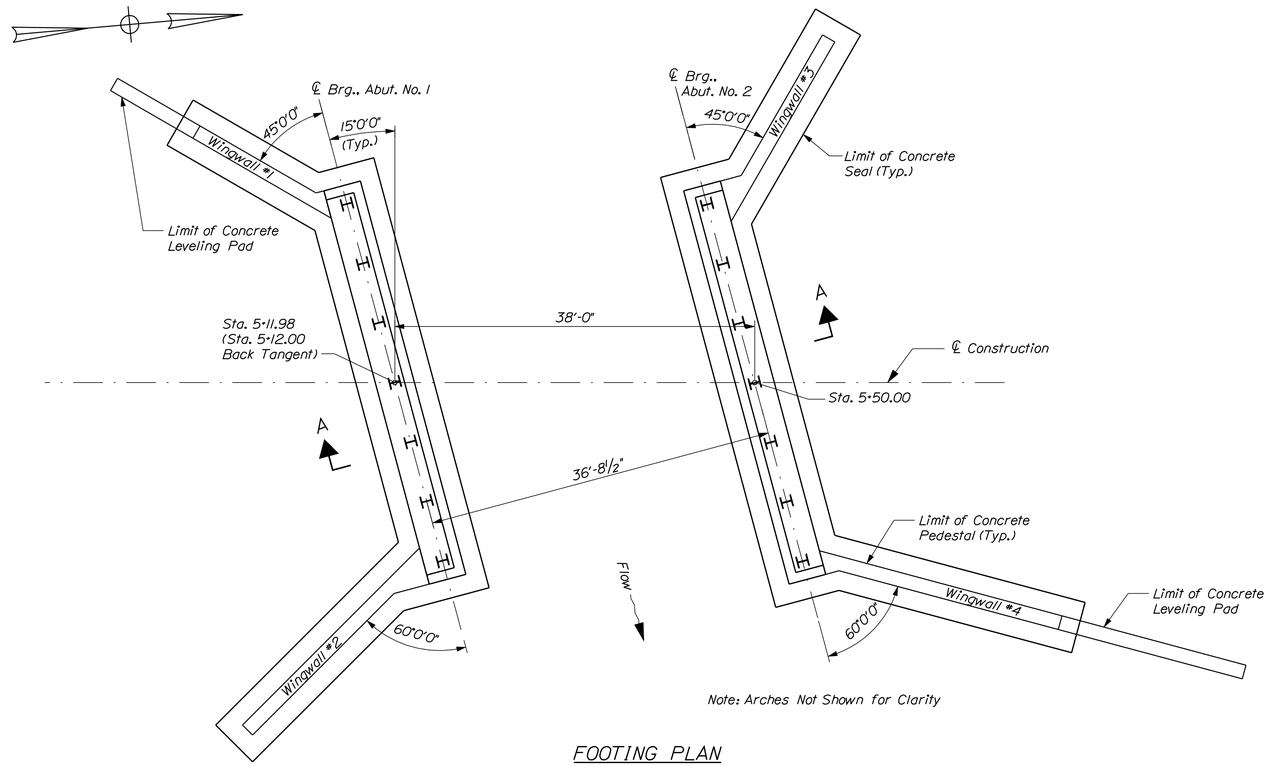

Note: Arches Not Shown for Clarity

FOOTING PLAN

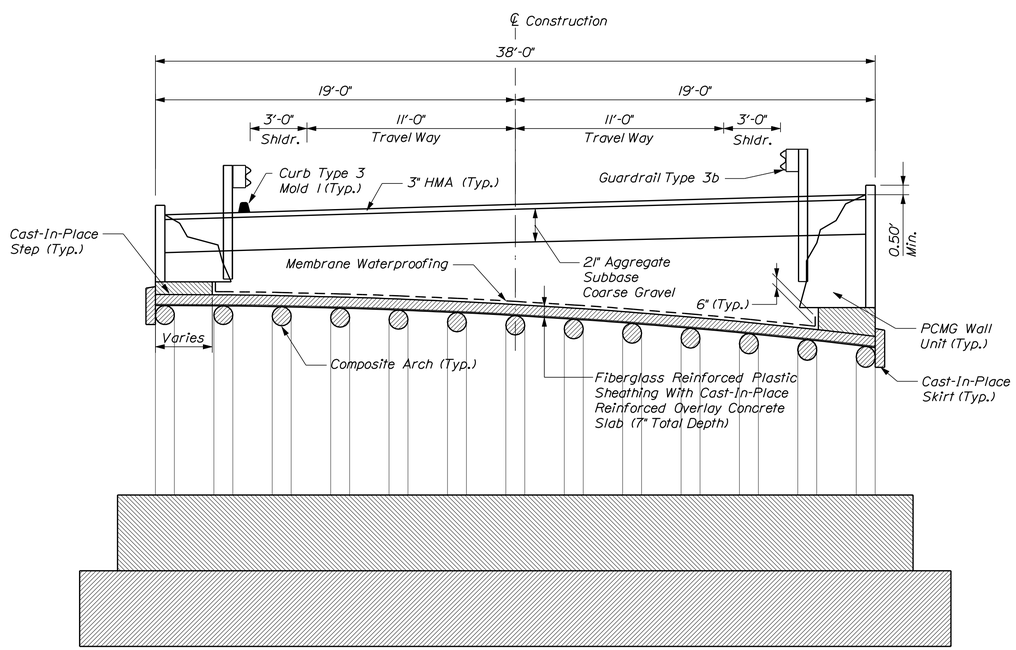

TRANSVERSE SECTION

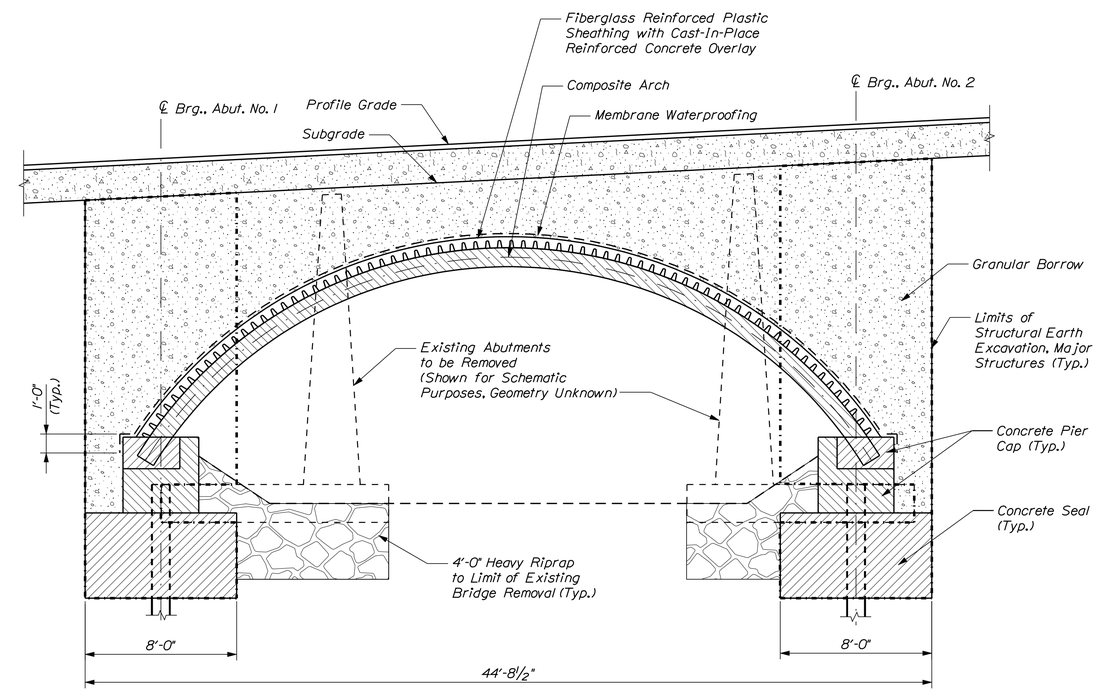

SECTION A-A

STATE OF MAINE
DEPARTMENT OF TRANSPORTATION

AC-BR-1709(201)X

PIN 17092.01

BRIDGE NO. 0077

BRIDGE PLANS

PROJ. MANAGER	N. Benoit	BY	DATE
DESIGN-DETAILED	T. Marshall	D. Drouin	4\1\10
CHECKED-REVIEWED	K. Wood	P. Hetherly	
DESIGN2-DETAILED2			
DESIGN3-DETAILED3			
REVISIONS 1			
REVISIONS 2			
REVISIONS 3			
REVISIONS 4			
FIELD CHANGES			

SIGNATURE

P.E. NUMBER

DATE

ROYAL RIVER BRIDGE
ROYAL RIVER
AUBURN ANDROSCOGGIN COUNTY

COMPOSITE ARCH
PLAN AND SECTIONS

SEA
SEA CONSULTANTS INC.
Scientists/Engineers/Architects

SHEET NUMBER
12
OF 19

Filename: ...\BRIDGE\MSTA\012_Arch Plan.dgn Division: BRIDGE Username: Dana.Drouin Date:4/1/2010

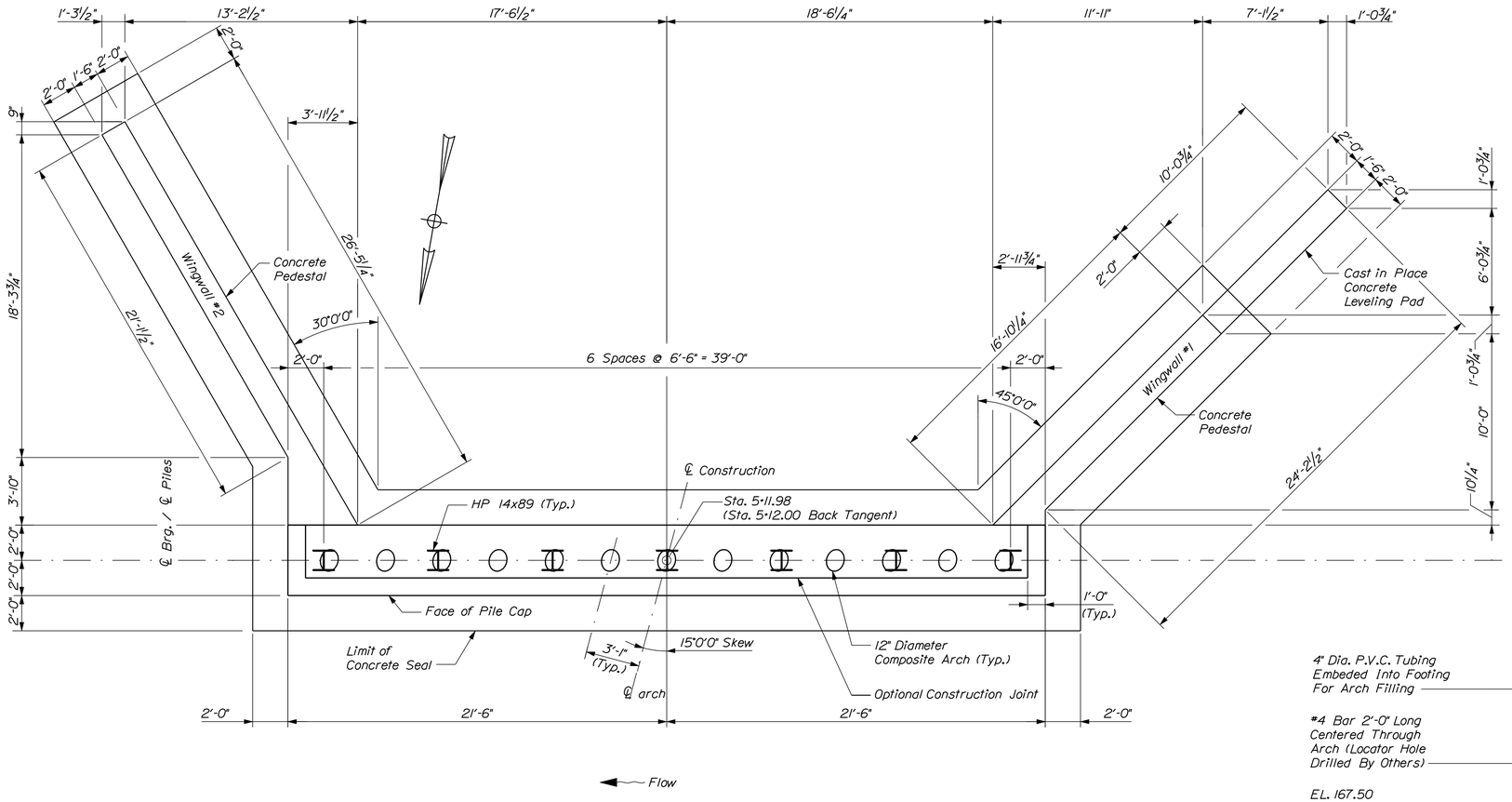

ABUTMENT NO. 1 PILE CAP PLAN

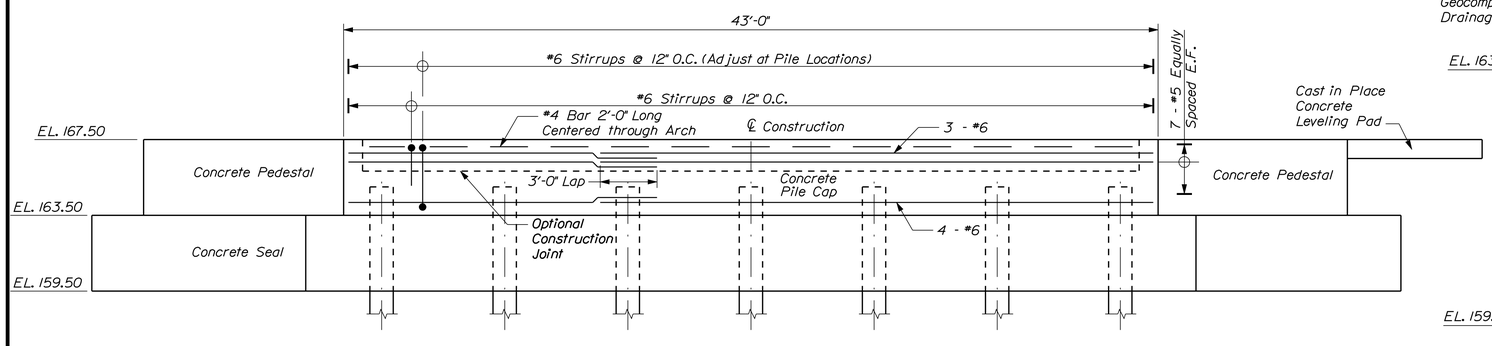

ABUTMENT NO. 1 PILE CAP ELEVATION

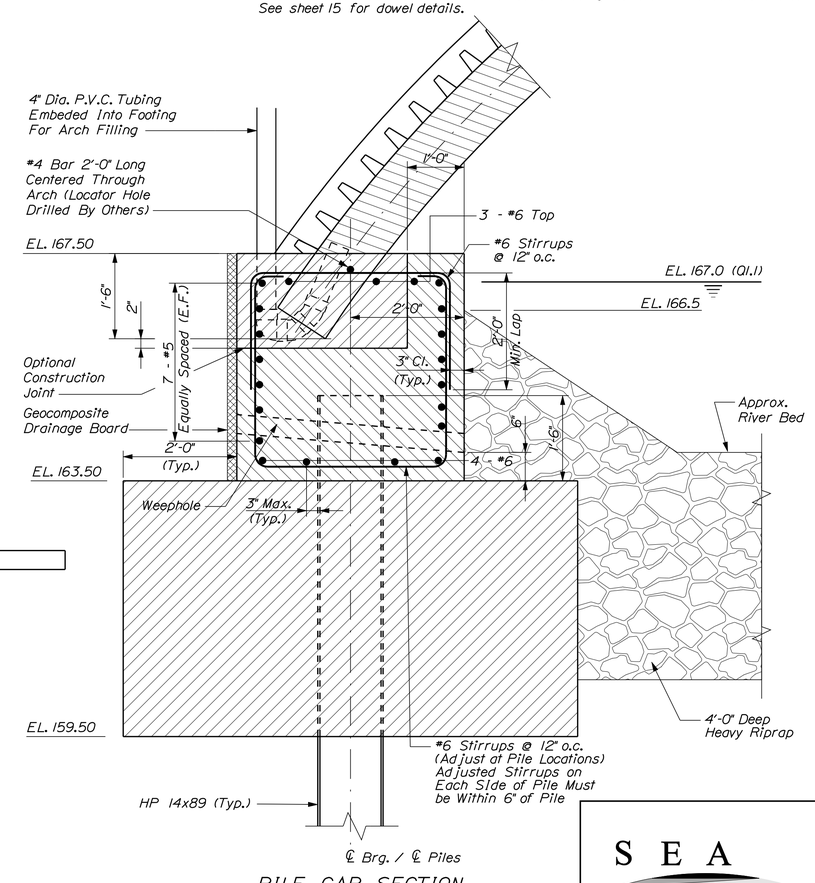

PILE CAP SECTION

ABUTMENT NOTES

1. Structural Earth Excavation, Abutments and Retaining Walls, required more than 12 inches below the bottom of the structure, will be paid for in accordance with Standard Specifications Section 206, Structural Excavation.

2. Reinforcing steel shall have a minimum concrete cover of 3 inches unless otherwise noted.

3. Place 4-in. diameter drains in the pile cap and wingwall pedestals at 10-ft maximum spacing. The exact location will be determined by the Resident.

4. Cover joints where waterstops are not required in accordance with Standard Details Section 502.

5. Attach geocomposite drainage board (full height) behind the pile caps and wingwall pedestals and in front of the wingwall pedestals (Item 620.6611).

SEAL NOTES

1. The seal concrete placement dimensions represent the minimum seal necessary for design and are not based on any particular sheet pile section.

2. The horizontal pay limit for seal concrete shall be to the dimensions shown on the plans. No additional payment will be made for concrete placed outside of these limits.

3. When sheet piling is used for seal cofferdams:

   a. Appropriate rolled corners shall be used.

   b. The inside face of the sheet piling shall be at or outside of the seal concrete dimensions shown.

4. The depth of the seal is set for a water elevation of 169.0. If the water elevation at the time of construction is higher, the depth of the seal shall be adjusted.

5. The Resident shall approve the method of placing dowels in the seal concrete. See sheet 15 for dowel details.

STATE OF MAINE
DEPARTMENT OF TRANSPORTATION

AC-BR-1709(201)X

PIN 17092.01

BRIDGE NO. 0077

BRIDGE PLANS

PROJ. MANAGER	N. Benoit	BY	DATE
DESIGN-DETAILED	T. Marshall	D. Drouin	4.1.10
CHECKED-REVIEWED	K. Wood	P. Hetherly	
DESIGN2-DETAILED2			
DESIGN3-DETAILED3			
REVISIONS 1			
REVISIONS 2			
REVISIONS 3			
REVISIONS 4			
FIELD CHANGES			

SIGNATURE

P.E. NUMBER

DATE

ROYAL RIVER BRIDGE
ROYAL RIVER
AUBURN ANDROSCOGGIN COUNTY

ABUTMENT NO. 1 DETAILS

SEA
SEA CONSULTANTS INC.
Scientists/Engineers/Architects

SHEET NUMBER
13
OF 19

Filename: ...\BRIDGE\MSTA\013_Abutment_1.dgn Division: BRIDGE Username: Dana.Drouin Date:4/1/2010

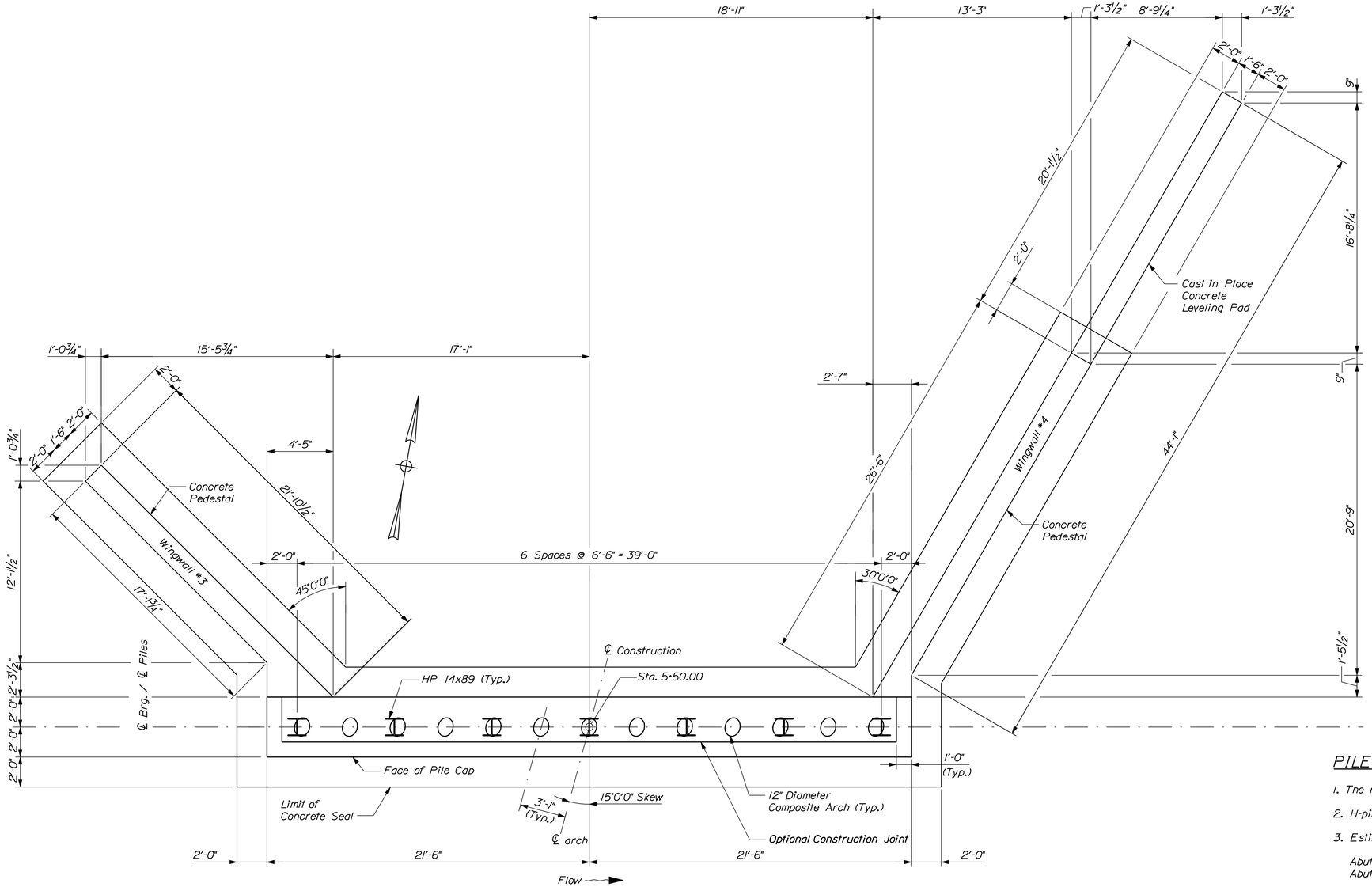

ABUTMENT NO. 2 PILE CAP PLAN

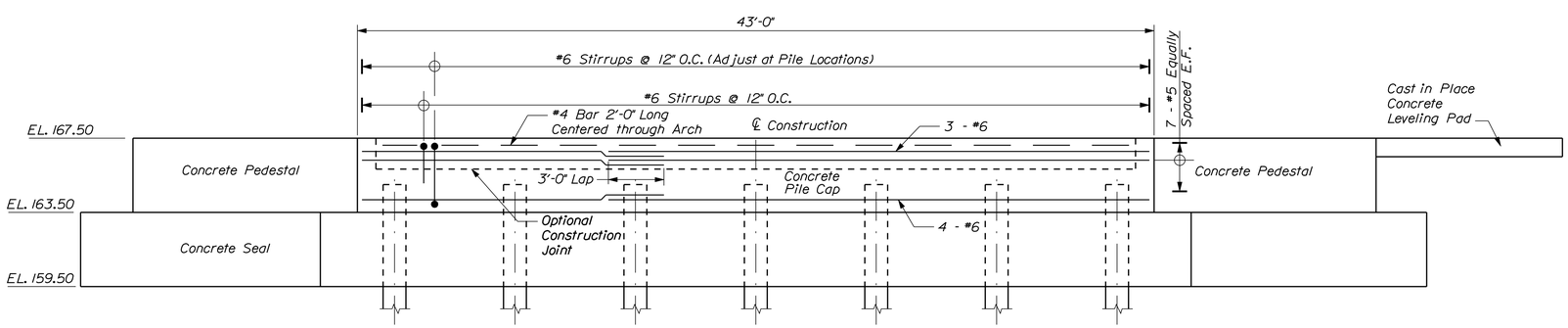

ABUTMENT 2 PILE CAP ELEVATION

PILE NOTES

1. The maximum factored pile load is 258 kips.

2. H-pile material shall be ASTM A 572, Grade 50.

3. Estimate of piles required:

   Abutment No. 1: 7 ~ HP 14x89 @ 28 feet
   Abutment No. 2: 7 ~ HP 14x89 @ 21 feet

4. All piles shall be equipped with a pile tip in accordance with Standard Specifications Section 501.10, Prefabricated Pile Tips.

5. The Contractor shall perform and submit a wave equation analysis for review and acceptance by the Resident. The maximum allowable driving stress is 0.90 times Fy. The submittal analyses shall include the proposed stopping criteria based on the wave equation analysis and the proposed driving system. The stopping criteria shall include the blows per inch and the number of 1-in. intervals at which pile installation may be terminated. The cost of performing the wave equation analysis will be considered incidental to Item No. 501.92, Pile Driving Equipment Mobilization.

6. The Contractor shall perform two dynamic load test(s) to confirm the ultimate capacity of the piles. The required nominal resistance for the pile is the factored axial pile load divided by a resistance factor of 0.65 per LRFD Specifications. The dynamic test shall be performed on the first production pile driven at each abutment.

7. Piles shall be driven to bedrock.

SEA
SEA CONSULTANTS INC.
Scientists/Engineers/Architects

STATE OF MAINE
DEPARTMENT OF TRANSPORTATION

AC-BR-1709(201)X

PIN 17092.01

BRIDGE NO. 0077

BRIDGE PLANS

		BY	DATE
PROJ. MANAGER	N. Benoit		
DESIGN-DETAILED	T. Marshall	D. Drouin	4.1.10
CHECKED-REVIEWED	K. Wood	P. Hetherly	
DESIGN2-DETAILED2			
DESIGN3-DETAILED3			
REVISIONS 1			
REVISIONS 2			
REVISIONS 3			
REVISIONS 4			
FIELD CHANGES			

SIGNATURE

P.E. NUMBER

DATE

ROYAL RIVER BRIDGE
ROYAL RIVER
AUBURN ANDROSCOGGIN COUNTY

ABUTMENT NO. 2 DETAILS

SHEET NUMBER
14
OF 19

Filename: ...\BRIDGE\MSTA\014_Abutment_2.dgn Division: BRIDGE Username: thomas.marshall Date:4/1/2010

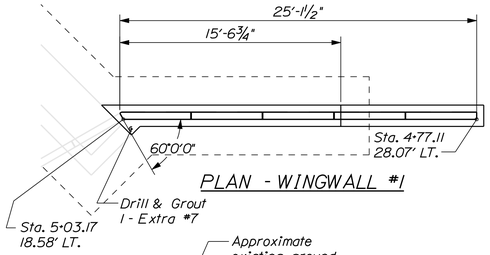

PLAN - WINGWALL #1

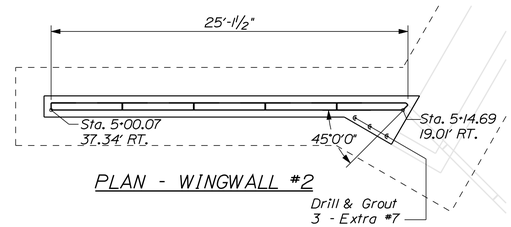

PLAN - WINGWALL #2

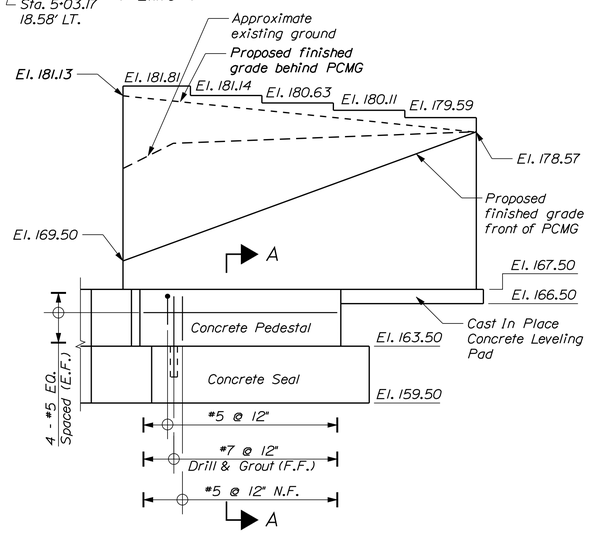

ELEVATION - WINGWALL #1

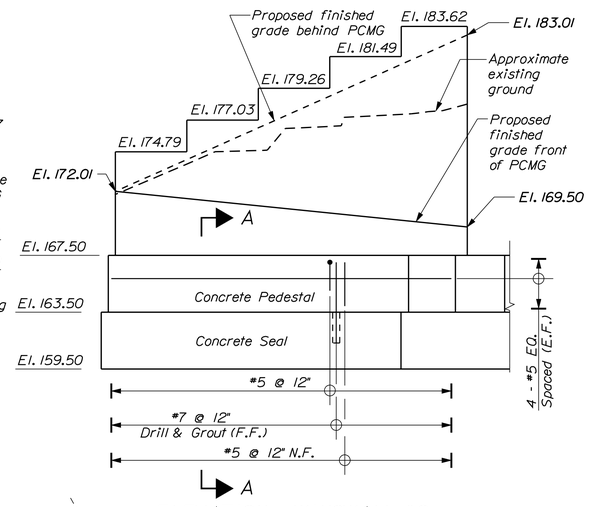

ELEVATION - WINGWALL #2

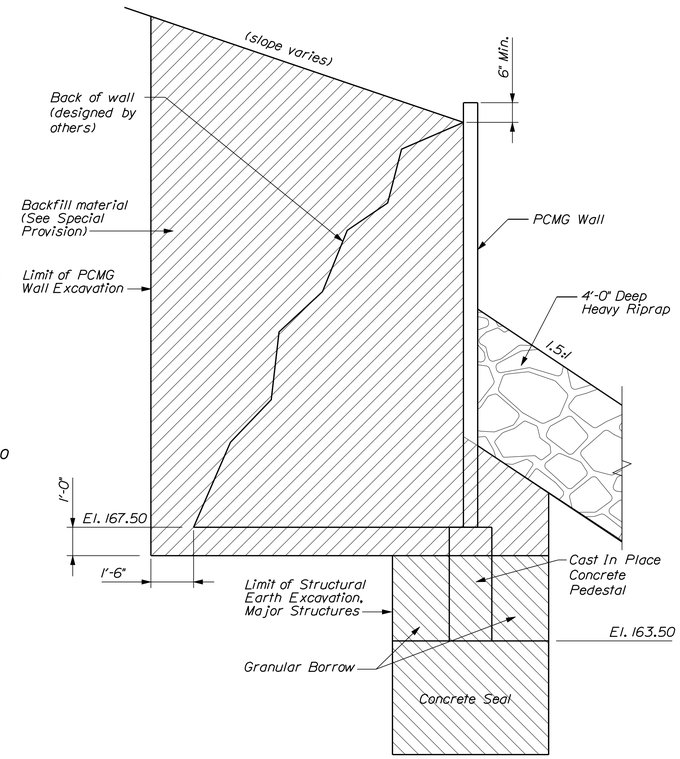

TYPICAL WINGWALL SECTION

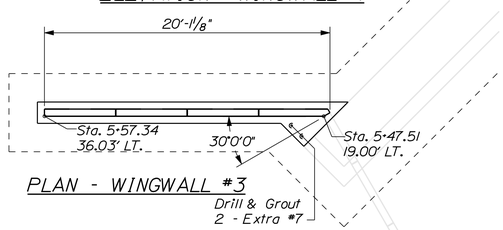

PLAN - WINGWALL #3

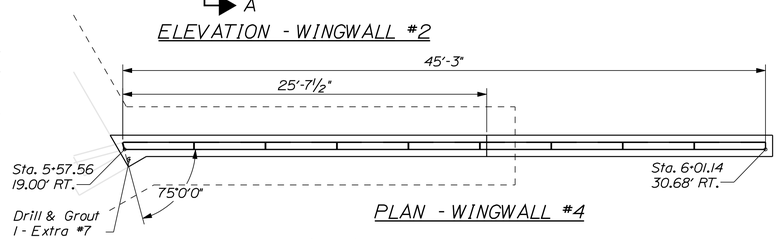

PLAN - WINGWALL #4

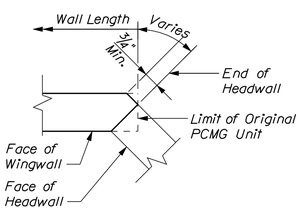

TYPICAL WING BEVEL DETAIL

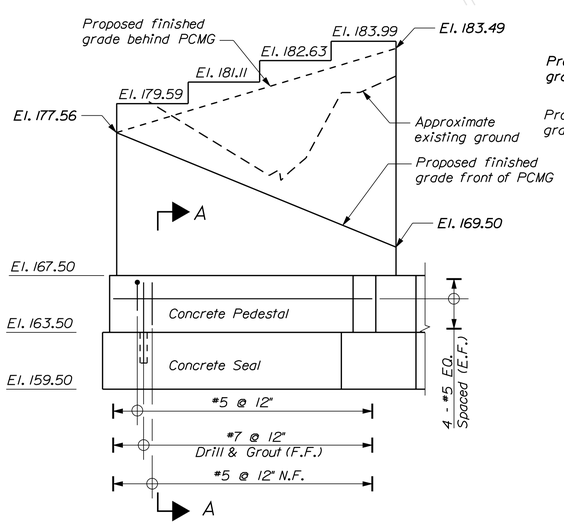

ELEVATON - WINGWALL #3

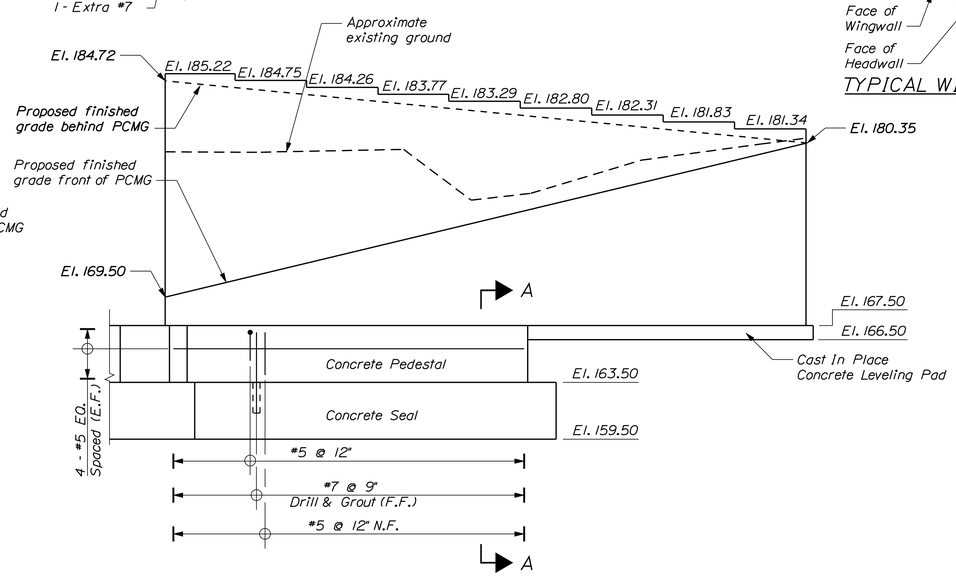

ELEVATION - WINGWALL #4

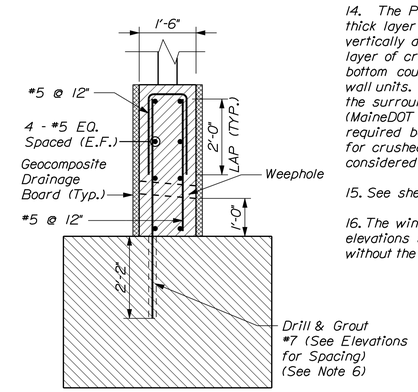

SECTION A-A

PREFABRICATED CONCRETE MODULAR GRAVITY WALL NOTES

1. The Contractor shall provide a Prefabricated Concrete Modular Gravity (PCMG) Wall in accordance with Special Provision Section 635. The PCMG Wall shall be designed and stamped by a Registered Professional Engineer and the design shall be submitted to the Resident for review. Plan details are shown for estimating purposes only.

2. The precast units shall be one of the following, or equal:

"T-Wall" as manufactured by a licensed manufacturer of Neel Company

"DoubleWal" as manufactured by a licensed manufacturer of DoubleWal Corp., Plainville, Connecticut.

3. For the strength limit state, the factored bearing pressure for PCMG Walls shall not exceed the factored bearing resistance of 5 ksf for wall system bases less than 8 feet wide and 7 ksf for bases between 8.5 and 12 feet wide. The factored bearing pressure for the service limit state shall not exceed the factored bearing resistance of 6 ksf.

4. Cofferdams for the PCMG Wall installation will be included with the corresponding Pay Item No. 511.07, Cofferdam - Abutment No. 1 or No. 2.

5. Wall lengths show are based on using 5'-0" unit widths with ⅜" vertical gap widths between units.

6. The anchoring material shall be one of the products listed on the Maine Department of Transportation List of Prequalified Type 3 Anchoring Materials. Installation shall be in accordance with the Manufacturer's recommendations. Anchored rebar shall achieve a minimum uncontinued pull out strength of 36 Kips.

7. Concrete pedestals shall be paid for under Item 502.21.

8. Elevations provided for the top of the wingwall are the minimum elevations required. The actual panel elevations shall be equal to or greater than the elevation specified.

9. Concrete pedestal shall be backfilled on each side simultaneously so that maximum height difference between lifts is 6".

10. The PCMG Wall shall consist of concrete with a maximum permeability of 2000 coulombs and corrosion resistance reinforcing steel.

11. The PCMG Wall units shall contain a minimum of 5.5 gallons per cubic yard of calcium nitrite solution or equivalent corrosion inhibitor approved by the Resident.

12. High water elevation for hydrostatic design condition is 172.9 ft.

13. A 1'-0" wide drainage geotextile shall be secured to the back face of the wall units at all joints up to the highest expected water level. Payment will be considered incidental to related contract items.

14. The PCMG Wall shall be constructed with a 1.5 foot thick layer of crushed stone (MaineDOT 703.31) placed vertically along the inside face of the wall units. The layer of crushed stone shall extend vertically form the bottom course of the wall units to the top course of the wall units. The crushed stone shall be separated from the surrounding backfill with erosion control geotextile (MaineDOT 722.03). A minimum of 1.5 feet of overlap is required between adjacent lengths of geotextile. Payment for crushed stone and erosion control geotextile shall be considered incidental to Pay Item 635.14.

15. See sheet 17 for guardrail notes.

16. The wingwall pedestals have been designed for the elevations shown and shall not be adjusted up or down without the approval of the resident.

STATE OF MAINE
DEPARTMENT OF TRANSPORTATION

AC-BR-1709(201)X

PIN 17092.01

BRIDGE NO. 0077

BRIDGE PLANS

PROJ. MANAGER	N. Benoit	BY	D. Drouin	DATE	4.1.10
DESIGN-DETAILED	T. Marshall				
CHECKED-REVIEWED	K. Wood		P. Hetherly		
DESIGN2-DETAILED2					
DESIGN3-DETAILED3					
REVISIONS 1					
REVISIONS 2					
REVISIONS 3					
REVISIONS 4					
FIELD CHANGES					

SIGNATURE

P.E. NUMBER

DATE

ROYAL RIVER BRIDGE
ROYAL RIVER
AUBURN ANDROSCOGGIN COUNTY

WINGWALL DETAILS

SEA
SEA CONSULTANTS INC.
Scientists/Engineers/Architects

SHEET NUMBER
15
OF 19

Filename: ...\BRIDGE\MSTA\015_Wingwalls.dgn Division: BRIDGE Username: Dana.Drouin Date:4/1/2010

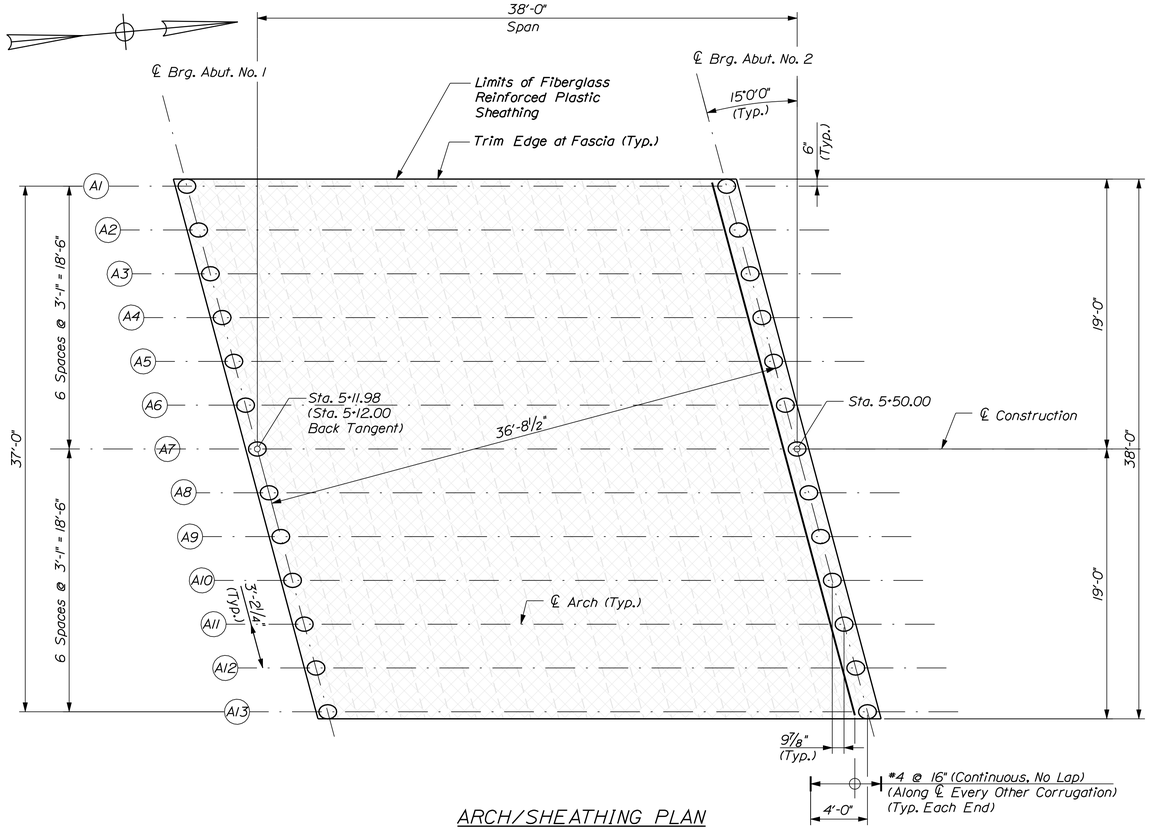

ARCH/SHEATHING PLAN

COMPOSITE ARCH TUBE NOTES

1. The composite arch superstructure erection, handling, and assembly of arch units shall be in accordance with Special Provision 509.74. Composite Arch Superstructure Erection.

2. Riprap adjacent to the arch shall be carefully placed so as not to damage the arch or headwall.

ARCH CONCRETE PLACEMENT NOTES

1. Standpipe configuration to be approved by Resident prior to pile cap placement.

2. Arches shall be filled under the supervision of the Resident.

3. Standpipe shall not be removed until arch concrete has set a minimum of 8 hours.

FIBERGLASS REINFORCED PLASTIC SHEATHING NOTES

1. Fiberglass reinforced plastic sheathing shall be installed parallel to the centerline of bearings.

2. Fiberglass reinforced plastic sheathing shall be attached with fasteners at 8" (at ℄ of each corrugation bottom) along each arch.

3. See Special Provision 509 for additional Fiberglass Reinforced Plastic Sheathing and fastener requirements.

OVERLAY CONCRETE SLAB NOTES

1. Welded wire fabric and transverse reinforcement shall be oriented parallel to the centerline of bearings.

2. Welded wire fabric shall be installed full length and width of overlay concrete slab. Trim edge of mesh to achieve 2" of cover.

3. Concrete overlay shall be paid for under item 502.41 Structural Concrete Superstructure Slab.

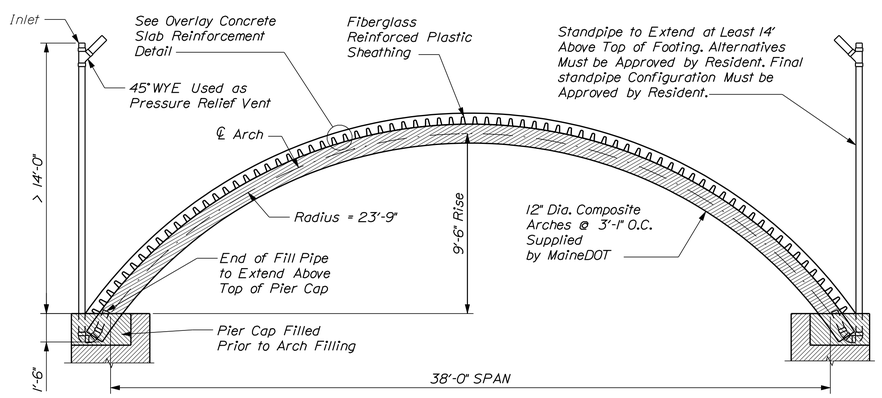

ARCH ELEVATION

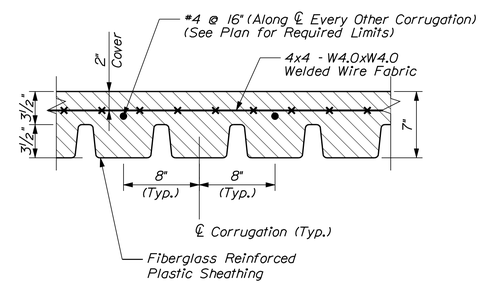

OVERLAY CONCRETE SLAB DETAIL

STATE OF MAINE
DEPARTMENT OF TRANSPORTATION

AC-BR-1709(201)X

PIN 17092.01

BRIDGE NO. 0077

BRIDGE PLANS

PROJ. MANAGER	N. Benoit	BY	DATE
DESIGN-DETAILED	T. Marshall	D. Drouin	4.1.10
CHECKED-REVIEWED	K. Wood	P. Hetherly	
DESIGN2-DETAILED2			
DESIGN3-DETAILED3			
REVISIONS 1			
REVISIONS 2			
REVISIONS 3			
REVISIONS 4			
FIELD CHANGES			

SIGNATURE

P.E. NUMBER

DATE

ROYAL RIVER BRIDGE
ROYAL RIVER
AUBURN ANDROSCOGGIN COUNTY

COMPOSITE ARCH DETAILS

SEA
SEA CONSULTANTS INC.
Scientists/Engineers/Architects

SHEET NUMBER
16
OF 19

Filename: ...\MSTA\016_Arch Details.dgn Division: BRIDGE Username: Dana.Drouin Date:4/1/2010

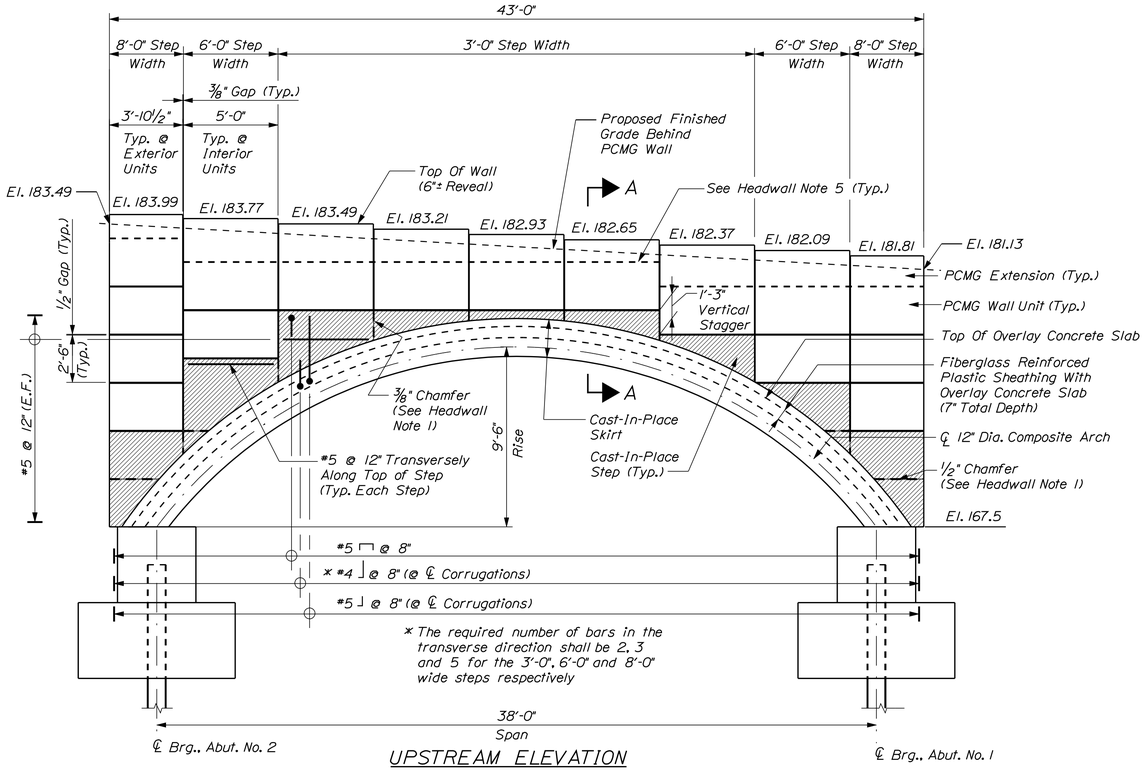

UPSTREAM ELEVATION

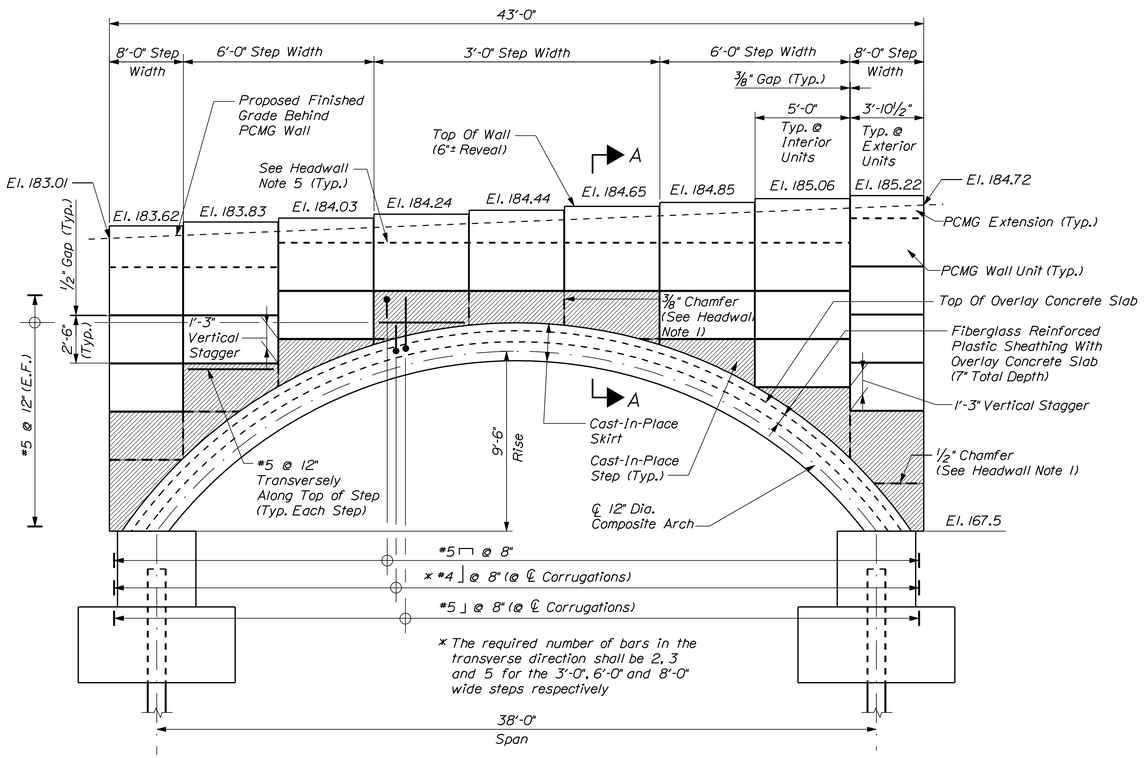

DOWNSTREAM ELEVATION

GUARDRAIL NOTES

1. Guardrail post spacing shall be adjusted within the headwall limits to avoid the PCMG wall units. Adjusted guardrail post spacing shall not exceed the standard spacing of the specified guardrail type. Guardrail to be used within the limits of the headwalls shall be pre-punched with holes spaced at one half the standard spacing of the specified guardrail type. All adjustments, including additional posts that are required, shall be incidental to item 606.17, guardrail Type 3b.

2. Guardrail posts installed on the bridge between stations 5+17, LT and 5+34, LT along the upstream (west) side shall be 6 feet in length with an embedment of 3.5 feet .

HEADWALL NOTES

1. Contractor to install 1/2" and 3/8" chamfer strips in cast in place steps to align with adjacent horizontal and vertical PCMG wall joints respectively.

2. Elevations provided for the top of the headwall are the minimum elevations required. The actual panel elevations shall be equal to or greater than the elevation specified.

3. Top elevation of the C.I.P. steps shall be included in the PCMG shop drawing submittal. The headwall steps have been designed for the elevations shown and shall not be adjusted up or down without the approval of the resident.

4. Refer to sheet 15 notes 1 through 3 for additional PCMG requirements.

5. Top of PCMG wall stems shall have a minimum of 6" of cover.

6. C.I.P. steps and skirts shall be paid for under Item 502.21.

7. See Sheet 15 for additional PCMG wall notes.

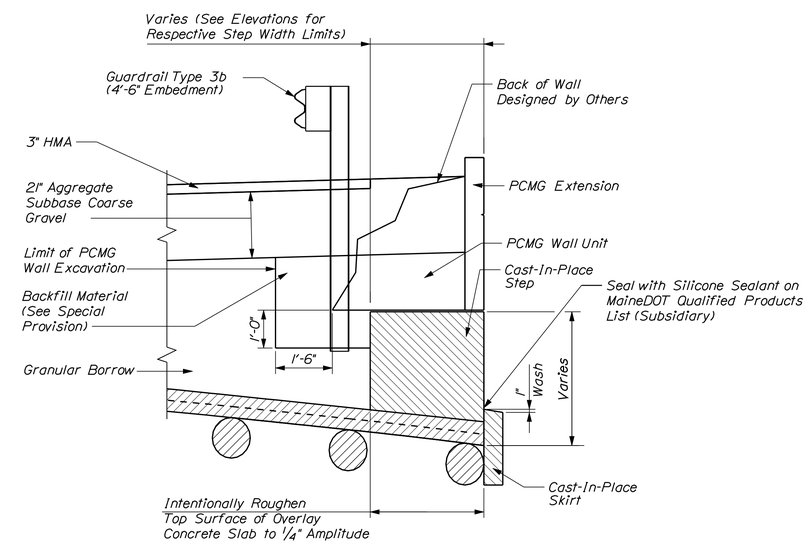

SECTION A-A

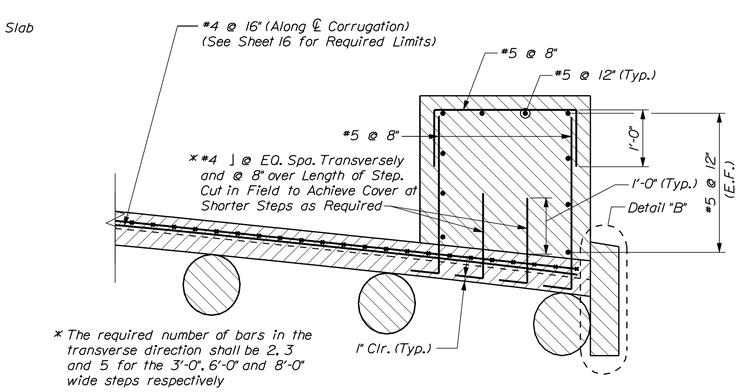

TYPICAL CAST-IN-PLACE STEP REINFORCING

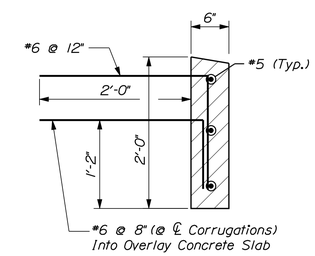

DETAIL B

STATE OF MAINE
DEPARTMENT OF TRANSPORTATION

AC-BR-1709(201)X

PIN 17092.01

BRIDGE NO. 0077

BRIDGE PLANS

PROJ. MANAGER	N. Benoit	BY	DATE
DESIGN-DETAILED	T. Marshall	D. Drouin	4\1\10
CHECKED-REVIEWED	K. Wood	P. Hetherly	
DESIGN2-DETAILED2			
DESIGN3-DETAILED3			
REVISIONS 1			
REVISIONS 2			
REVISIONS 3			
REVISIONS 4			
FIELD CHANGES			

SIGNATURE

P.E. NUMBER

DATE

ROYAL RIVER BRIDGE
ROYAL RIVER
AUBURN ANDROSCOGGIN COUNTY

HEADWALL DETAILS

SEA
SEA CONSULTANTS INC.
Scientists/Engineers/Architects

SHEET NUMBER
17
OF 19

Filename: ...\BRIDGE\MSTA\017_Headwalls.dgn Division: BRIDGE Username: Dana.Drouin Date:4/1/2010

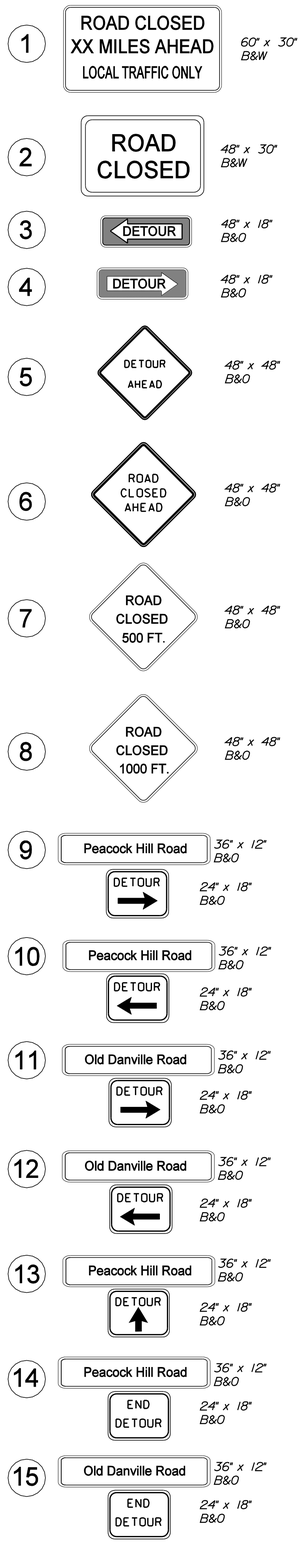

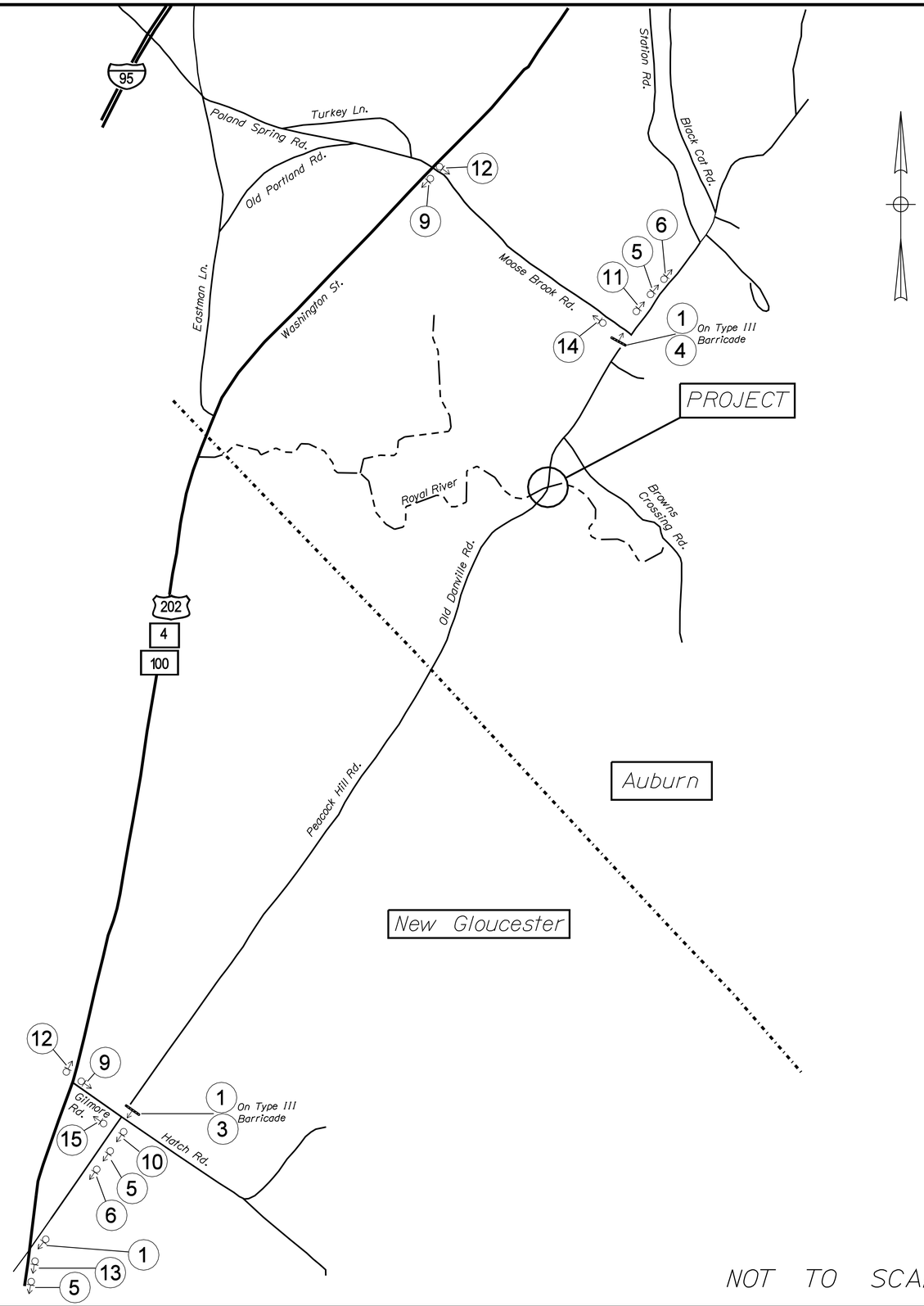

NOT TO SCALE

Detour Notes

1. Spacing to be determined by the Resident in accordance with MUTCD.
2. Install 3-30 ft. Temporary Concrete Barriers as shown in the Signage at Project Location plan (90 feet total). Payment shall be made under Item No. 526.30 Temporary Concrete Barrier, Type I.
3. Install 3 Type III Barricades as shown in the Signage at Project Location plan (8 total). Payment shall be made under Item No. 652.312 Type III Barricades.
4. Conflicting directional signs shall be covered.
5. At closures, adequate buffer zones shall be provided between the Type III Barricade and Temporary Concrete Barrier, based on speed limit.
6. Concrete barrier shall have retro-reflectivity immediately in front of or attached to barrier.

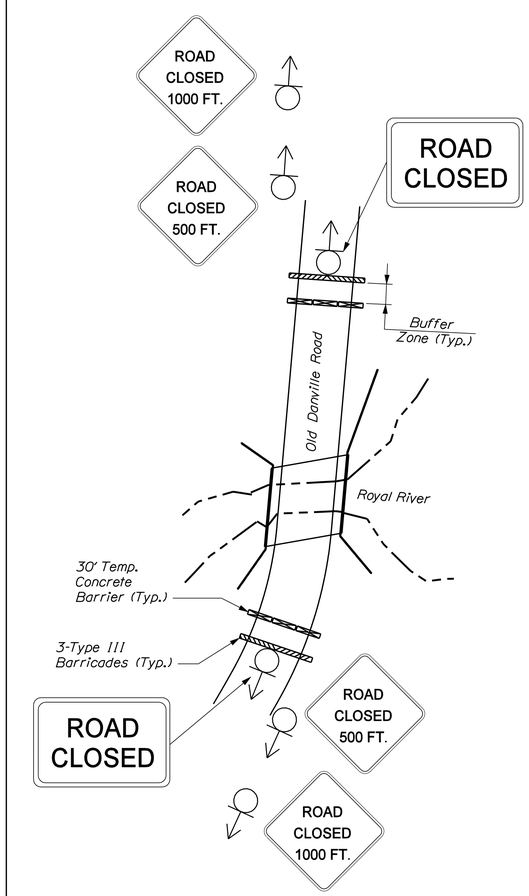

SIGNAGE AT PROJECT LOCATION

STATE OF MAINE
DEPARTMENT OF TRANSPORTATION

AC-BR-1709(201)X

PIN 17092.01

BRIDGE NO. 0077

BRIDGE PLANS

		BY	DATE
PROJ. MANAGER	N. Benoit		
DESIGN-DETAILED	T. Marshall	D. Drouin	
CHECKED-REVIEWED	K. Wood	P. Hetherly	3/11/10
DESIGN2-DETAILED2	Dana Hanks		
DESIGN3-DETAILED3			
REVISIONS 1			
REVISIONS 2			
REVISIONS 3			
REVISIONS 4			
FIELD CHANGES			

SIGNATURE

P.E. NUMBER

DATE

ROYAL RIVER BRIDGE
ROYAL RIVER
AUBURN ANDROSCOGGIN COUNTY

DETOUR PLAN

SHEET NUMBER
18
OF 19

Filename: ...\MSTA\018_Detour plan.dgn Division: BRIDGE Username: Dana.Drouin Date:4/1/2010