# TOWN OF WILLIMANTIC

## SPECIFICATIONS

Design: Load and Resistance Factor Design per AASHTO LRFD Bridge Design Specifications Fourth Edition 2007. Design Load for New Abutments HL-93 Maine Modified Str. I

Construction shall be done using the MaineDOT Standard Specifications Revision of December 2002

Existing Structural Steel is not capable of carrying a full truck, Load rating for Structural Steel (as modified shown within this planset) is as follows:

Inventory: 30.7 Tons
Operating: 39.8 Tons

## LIST OF DRAWINGS


Title Sheet ..... 1
Estimated Quantities ..... 2
General Plan & Profile ..... 3
Superstructure Plan & Section ..... 4
Abutment No. 1 ..... 5
Abutment No. 2 ..... 6
Footings ..... 7
Abutment Sections ..... 8
Bearings ..... 9
Reinforcing Steel Schedule ..... 10


# WILLIMANTIC
# PISCATAQUIS
# EAELEYS BRIDGE #2995
## OVER
# BIG WILSON STREAM

## PROJECT NO. 017090.00
## PROJECT LENGTH 0.049 mi.
## ABUTMENT REPLACEMENT
## BRIDGE NO. 2995

## MATERIALS

Concrete (Unless noted otherwise) ..... Class "A"
Reinforcing Steel ..... ASTM A615/A615M, Grade 60
Anchor Bolts ..... ASTM F1554 Grade 36
Miscellaneous plate steel ..... ASTM A36

## BASIC DESIGN STRESSES

Concrete ..... f 'c = 4,350 psi

Reinforcing Steel ..... f y = 60,000 psi

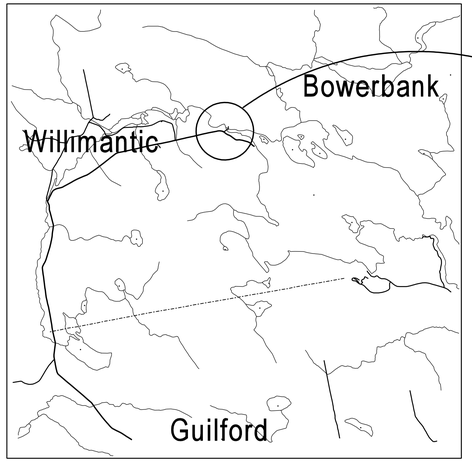


PROJECT LOCATION

## SCOPE OF WORK

Jack the existing (3) steel girder superstructure up and place on temporary supports to allow for constuction of new taller abutments. Remove the existing Timber crib abutments. Construct new cast in place concrete footings, abutments with wingwalls. Remove 4'È of the existing superstructure. Place bridge on new abutments with new bearings. Grade approaches to meet the profile grade, open bridge to traffic. Existing Bridge will be raised approximately 2 feet over its existing configuration.


CALDERWOOD ENGINEERING, ETC.
STRUCTURAL ENGINEERING • DETAILING SERVICES
222 RIVER RD, RICHMOND, ME 04357 PH/FX (207)737-2007 / 737-2008


PREPARED FOR:
TOWN OF WILLIMANTIC
EARLEY BRIDGE
WILLIMANTIC, MAINE
PIN 017090.00

STATE OF MAINE
ERIC J. CALDERWOOD
No. 9099
LICENSED PROFESSIONAL ENGINEER

P.E. NUMBER 9099
DATE APR 2010

| | BY | DATE |
|---|---|---|
| DESIGN-DETAILED | OGK | MAR 2010 |
| CHECKED-REVIEWED | ETC | APR 2010 |
| REVISIONS 1 | | |
| REVISIONS 2 | | |
| REVISIONS 3 | | |
| REVISIONS 4 | | |
| FIELD CHANGES | | |

EARLEY BRIDGE
WILLIMANTIC MAINE
TITLE

SHEET NUMBER
1

CALDERWOOD ENGINEERING
222 RIVER ROAD
RICHMOND, ME 04357
PH. (207) 737-2007 FAX (207) 737-2008


Filename: ...\001_Title.dgn Workgroup: Structures Division Username: Eric Calderwood Date:6/7/2010

## ESTIMATED QUANTITIES

| ITEM NO. | DESCRIPTION | QUANTITY | UNIT |
|---|---|---|---|
| 202.10 | PARTIAL REMOVAL OF SUPERSTRUCTURE (SEE PLANS) | 1 | LUMP |
| 203.20 | COMMON EXCAVATION | 80 | CY |
| 203.24 | COMMON BORROW | 260 | CY |
| 203.25 | GRANULAR BORROW | 490 | CY |
| 206.082 | STRUCTURAL EARTH EXC. - MAJOR STRUCTURES | 740 | CY |
| 304.10 | AGGR SUBB COURSE - GRAVEL | 130 | CY |
| 502.21 | STRUCTURAL CONCRETE ABUT & RET WALL | 225 | CY |
| 502.56 | CONCRETE FILL | 35 | CY |
| 503.12 | REINFORCING STEEL, FAB & DEL | 11200 | LB |
| 503.13 | REINFORCING STEEL, PLACING | 11200 | LB |
| 511.07 | COFFERDAM - ABUTMENT #1 | 1 | LUMP |
| 511.07 | COFFERDAM - ABUTMENT #2 | 1 | LUMP |
| 526.30 | TEMPORARY CONCRETE BARRIER TYPE I | 40 | LF |
| 606.23 | GUARDRAIL TYPE 3C - SINGLE RAIL | 75 | LF |
| 606.78 | LOW VOLUME GUARDRAIL END | 4 | EA |
| 610.08 | PLAIN RIP RAP | 140 | CY |
| 615.07 | LOAM | 25 | CY |
| 618.1401 | SEEDING METHOD #2, PLAN QUANTITY | 4 | UNIT |
| 619.1201 | MULCH, PLAN QUANTITY | 4 | UNIT |
| 652.312 | TYPE III BARRICADES | 4 | EACH |
| 656.75 | TEMP. SOIL EROSION AND WATER POLL. CONTROL | 1 | LUMP |
| 659.10 | MOBILIZATION | 1 | LUMP |

## GENERAL CONSTRUCTION NOTES

1. All Utility Facilities shall be adjusted by the respective Utilities unless otherwise noted.
2. During construction, the Road will be closed to Traffic. Signs shall be erected at each end of the bridge indicating that the bridge is closed to traffic and that motorists should seek alternate routes. 20 LF of concrete barrier shall be placed across the roadway at each end of the bridge to prevent vehicular access. Type III barriers shall be placed across the roadway adjacent to the shoulder of and visible from Route 150.
3. Place a 2' wide strip of Temporary Erosion Control Blanket on the side slopes along the top of the Riprap, behind the Wingwalls and as shown on plans. Payment shall be included in temporary erosion and pollution control.
4. All Embankment Material shall be Granular Borrow meeting the requirements of Subsection 703.19, Material for Underwater Backfill.
5. Place Loam 2" deep on all side slopes.
6. Do not excavate for Aggregate Subbase Course where Existing Material is suitable as determined by the Resident.
7. Two Flexible Reflectorized Guardrail Markers shall be installed at each leading Guardrail End and one at each trailing Guardrail End.
8. Install 6" of crushed stone meeting the requirements of standard specification 703.31 in front of new abutments at the Finished Grade elevation. Payment for material, labor, and equipment for installation, placement and grading shall be considered incidental to related contract items, no separate payment shall be made. Quantity of crushed stone required shall not exceed 15 cubic yards. Exact area and limits of crushed stone to be determined in the field.
9. Removal of the existing abutments is considered incidental, the volume was included in the structural earth excavation. The exact extent of the existing cribber is not known.
10. The jacking and shoring of the existing superstructure along with the resetting of the superstructure shall be considered incidental to item #202.10 Removal of Superstructure.
11. The Clearing Limits as shown on the plans are approximate. The exact limits shall be established in the field. Payment for clearing will be incidental to related Contract items.
12. Place rip rap in front of the end wingwalls at the soil elevation. Taper the rip rap down towards the front fact of the abutment. Slope the rip rap at 1.75:1 normal to the wingwall, towards the edge of stream.
13. Backfill of the Abutments will consist of Granular Borrow.
14. Payment for Bearing Pad shall be considered incidental to Removal of Superstructure item number 202.10. Neoprene pads shall be polychloroprene or natural polyisoprene of 60 ± 5 Shore A durometer hardness, and shall conform to the requirements of Division 2, Section 18.2 of AASHTO Standard Specifications for Highway Bridges.
15. All in stream work shall take place between May 1st 2010 and August 14th 2010
16. Contractor shall work exact approach guardrail spacing to align with Existing Guardrail mounted on the existing bridge. New guardrail should be tied into the Guardrail as currently mounted on the bridge at all (4) corners. Begin and end stations listed on cross sections are approximate and shall be modified in the field to account for this.
17. All hardware, anchor rods, and nuts shall be galvanized in accordance with ASTM A153. All plate steel for bearings shall be hot dip galvanized in accordance with ASTM A123.
18. Touch up paint shall be a NepCoat Qualified system, topcoat color shall approximate that of the existing steel paint color, the Qualified system applied shall be compatible with the existing lead based coating to remain.
19. Place 2" of loam and seed on all embankment side slopes
20. Existing Roadway gravel meets applicable requirements and shall be re-used in place as practicable.
21. Contractor to provide a Dry Hydrant on the North side of the Bridge. Hydrant to consist of 8"ϕ PVC with strainer and strainer cap at the submerged end. Dry end to consist of hose connection, strainer and connection cap. Insulate pipe as necessary to prevent freezing. Dry end Cap to be located 2'± above ground. Exact location to be determined in the field with consultation with the Town of Willimantic Fire Department. Payment for this item will be considered incidental to other work.


CALDERWOOD ENGINEERING, ETC.
STRUCTURAL ENGINEERING • DETAILING SERVICES
222 RIVER RD, RICHMOND, ME 04357 PH/FX (207)737-2007 / 737-2008


PREPARED FOR: TOWN OF WILLIMANTIC

EARLEY BRIDGE
WILLIMANTIC, MAINE
PIN 017090.00

STATE OF MAINE ERIC A. CALDERWOOD No. 9099 LICENSED PROFESSIONAL ENGINEER

9099 P.E. NUMBER

DATE MAR 2010

| | BY | DATE |
|---|---|---|
| DESIGN-DETAILED | OGK | MAR 2010 |
| CHECKED-REVIEWED | ETC | APR 2010 |
| REVISIONS 1 | | |
| REVISIONS 2 | | |
| REVISIONS 3 | | |
| REVISIONS 4 | | |
| FIELD CHANGES | | |

EARLEY BRIDGE
WILLIMANTIC MAINE

ESTIMATED QUANTITIES

SHEET NUMBER

2

CALDERWOOD ENGINEERING 222 RIVER ROAD RICHMOND, ME 04357 PH. (207) 737-2007 FAX (207) 737-2008


Filename: ...\002_Estimate.dgn Workgroup: Structures Division Username: Eric Calderwood Date:6/7/2010

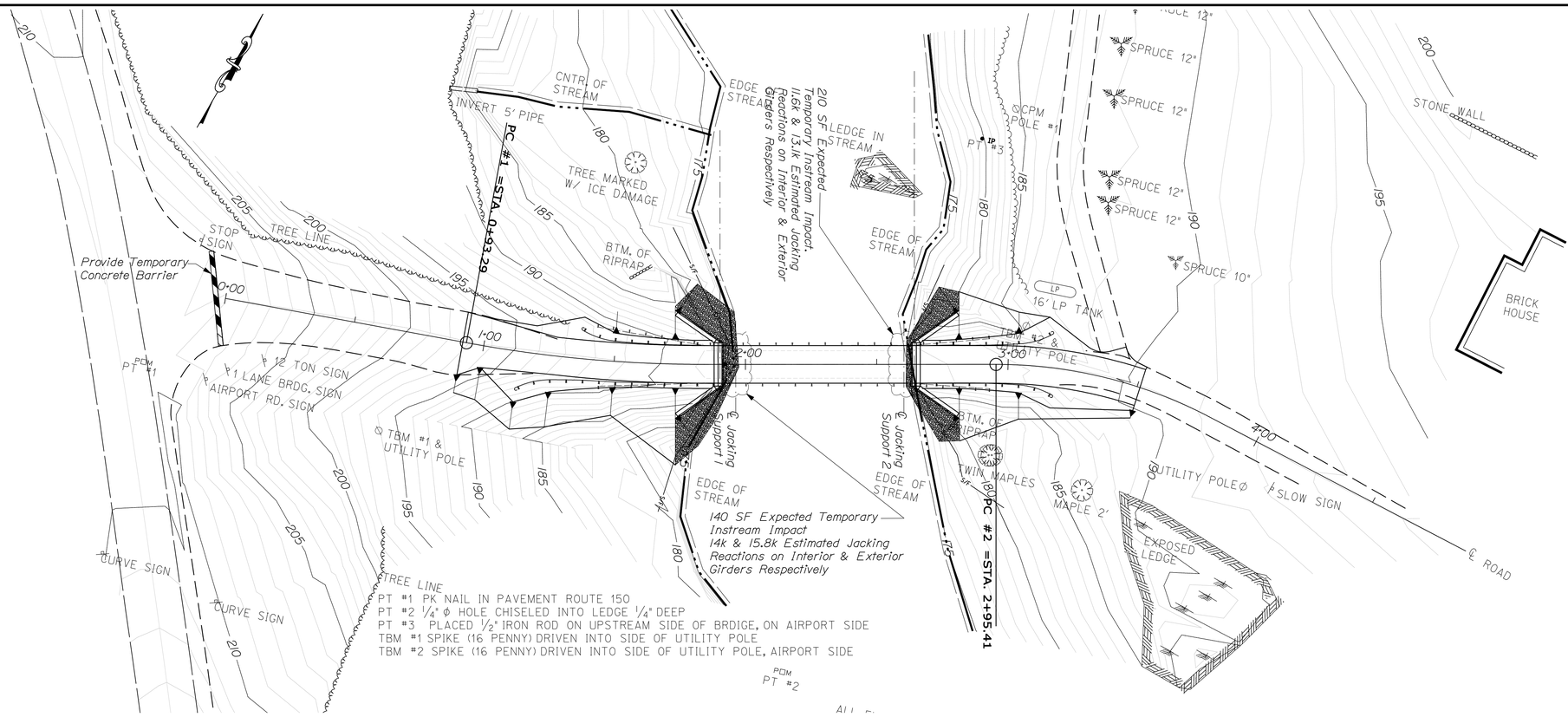


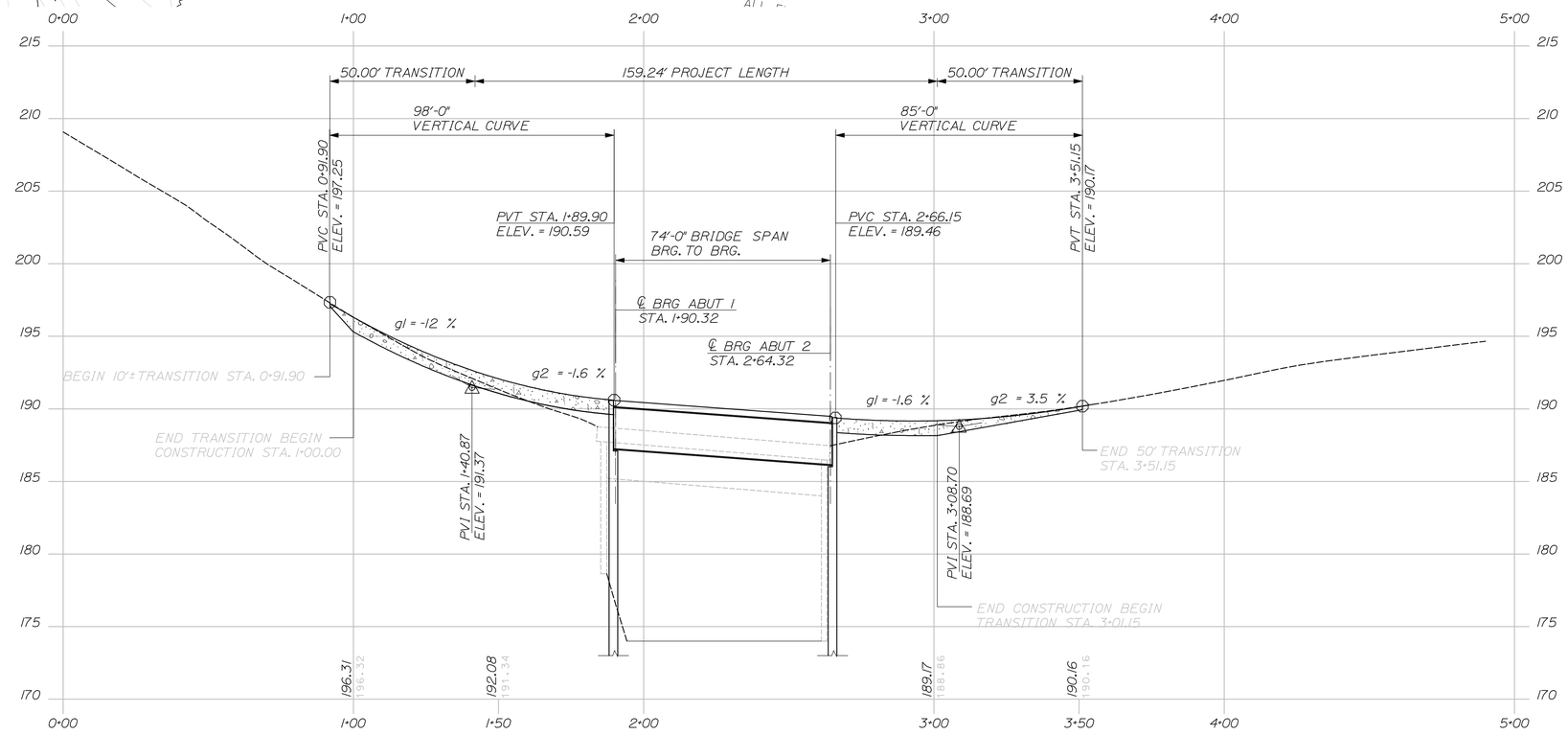


PROFILE - EARLEY BRIDGE
WILLIMANTIC, MAINE
HORIZONTAL SCALE: 1"=25'
VERTICAL SCALE: 1"=5'


CALDERWOOD ENGINEERING, ETC.
STRUCTURAL ENGINEERING • DETAILING SERVICES
222 RIVER RD, RICHMOND, ME 04357 PH/FX (207)737-2007 / 737-2008


PREPARED FOR:
TOWN OF WILLIMANTIC

EARLEY BRIDGE
WILLIMANTIC, MAINE
PIN 017090.00

STATE OF MAINE
ERIC J. CALDERWOOD
No. 9099
LICENSED PROFESSIONAL ENGINEER

P.E. NUMBER 9099
DATE MAR 2010

| | | BY | DATE |
|---|---|---|---|
| DESIGN-DETAILED | OCK | JJH | OCT 09 |
| CHECKED-REVIEWED | ETC | ETC | APR 2010 |
| REVISIONS 1 | | | |
| REVISIONS 2 | | | |
| REVISIONS 3 | | | |
| REVISIONS 4 | | | |
| FIELD CHANGES | | | |

EARLEY BRIDGE
WILLIMANTIC MAINE

PLAN AND PROFILE

SHEET NUMBER
3


CALDERWOOD ENGINEERING
222 RIVER ROAD
RICHMOND, ME 04357
PH. (207) 737-2007 FAX (207) 737-2008



Filename: ...\003_Profile.dgn
Workgroup: Structures Division
Username: Eric Calderwood
Date:6/7/2010

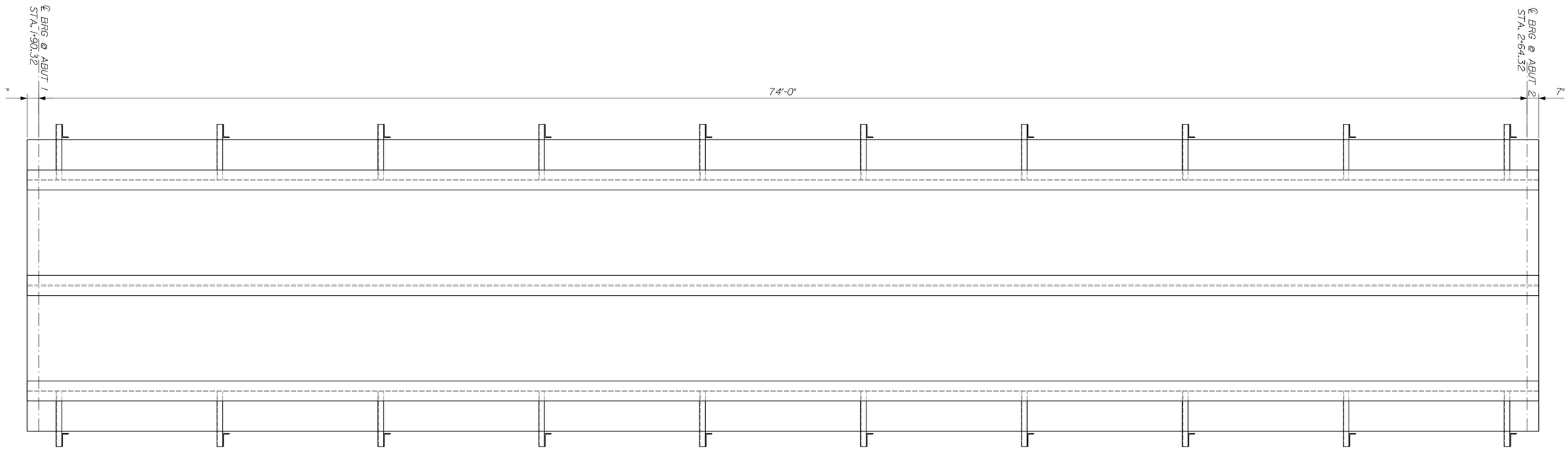


GENERAL PLAN
SCALE: 3/8" = 1'-0"

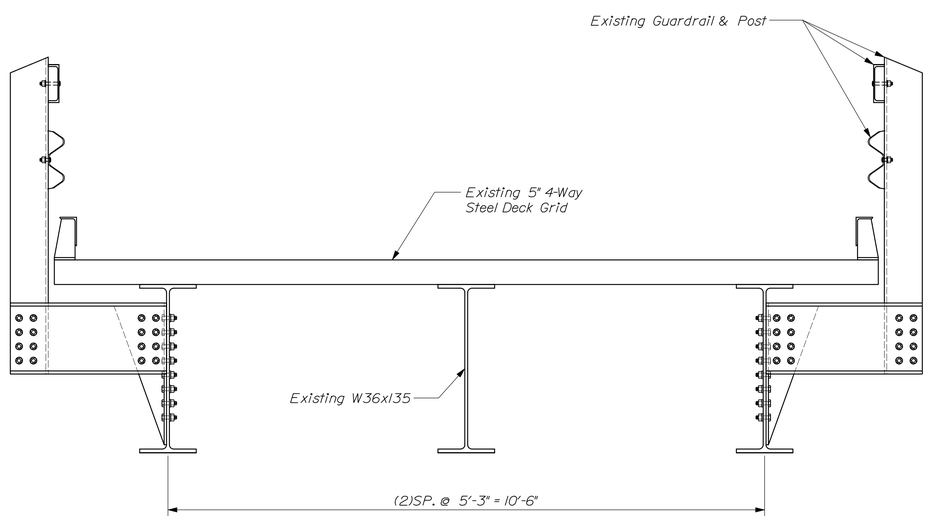


TYPICAL SECTION
SCALE: 3/4" = 1'-0"

## SUPERSTRUCTURE NOTES

1. Contractor to remove 4'± of Existing Steel Girders to allow for a 74'-0" span with a 75'-2"± overall length.

2. All steel removed to accomplish the shortening of the span shall be removed from the abutment #1 end of the structure. The steel grid deck shall be removed to approximately flush with a Main Bearing bar of the existing grid.

3. The steel and grid deck shall be placed back down onto the new abutments prior to placement of the top of backwall. Exact top of Backwall elevation shall be determined in the field and shall be approximately 1/8" higher than the top of the steel grid bridge deck.

4. Touchup painting of existing steel is only required in the immediate vicinity of the field cuts, an in locations where coating has been damaged due to jacking operations.

5. The existing paint on the bridge is lead based and shall be handled and treated/disposed of a required by law.


CALDERWOOD ENGINEERING, ETC.
STRUCTURAL ENGINEERING • DETAILING SERVICES
222 RIVER RD, RICHMOND, ME 04357 PH/FX (207)737-2007 / 737-2008


PREPARED FOR:
TOWN OF WILLIMANTIC

EARLEY BRIDGE
WILLIMANTIC, MAINE
PIN 017090.00

STATE OF MAINE
ERIC A. CALDERWOOD
No. 9099
LICENSED PROFESSIONAL ENGINEER

9099
P.E. NUMBER

DATE MAR 2010

| | | BY | DATE |
|---|---|---|---|
| DESIGN-DETAILED | OCK | JJH | DEC 09 |
| CHECKED-REVIEWED | ETC | ETC | APR 2010 |
| REVISIONS 1 | | | |
| REVISIONS 2 | | | |
| REVISIONS 3 | | | |
| REVISIONS 4 | | | |
| FIELD CHANGES | | | |

EARLEY BRIDGE
WILLIMANTIC MAINE

SUPERSTRUCTURE PLAN

SHEET NUMBER
4

CALDERWOOD ENGINEERING
222 RIVER ROAD
RICHMOND, ME 04357
PH. (207) 737-2007 FAX (207) 737-2008


Username: Eric Calderwood Date:6/7/2010
Workgroup: Structures Division
Filename: ...\004_GENERAL_PLAN.dgn

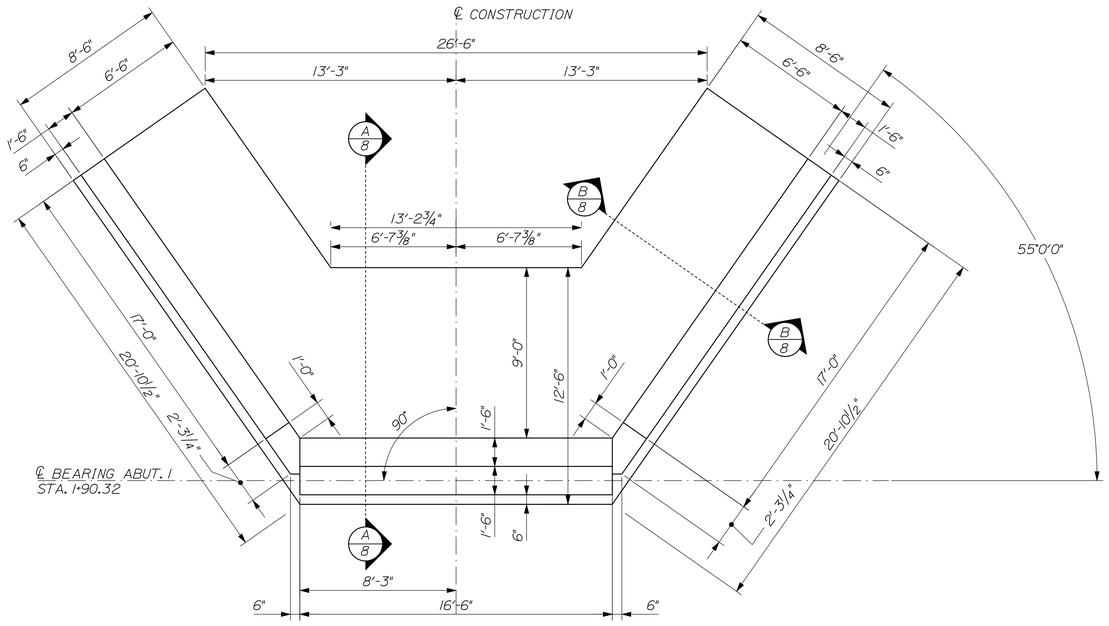


## ABUTMET 1 PLAN

¼"=1'-0"

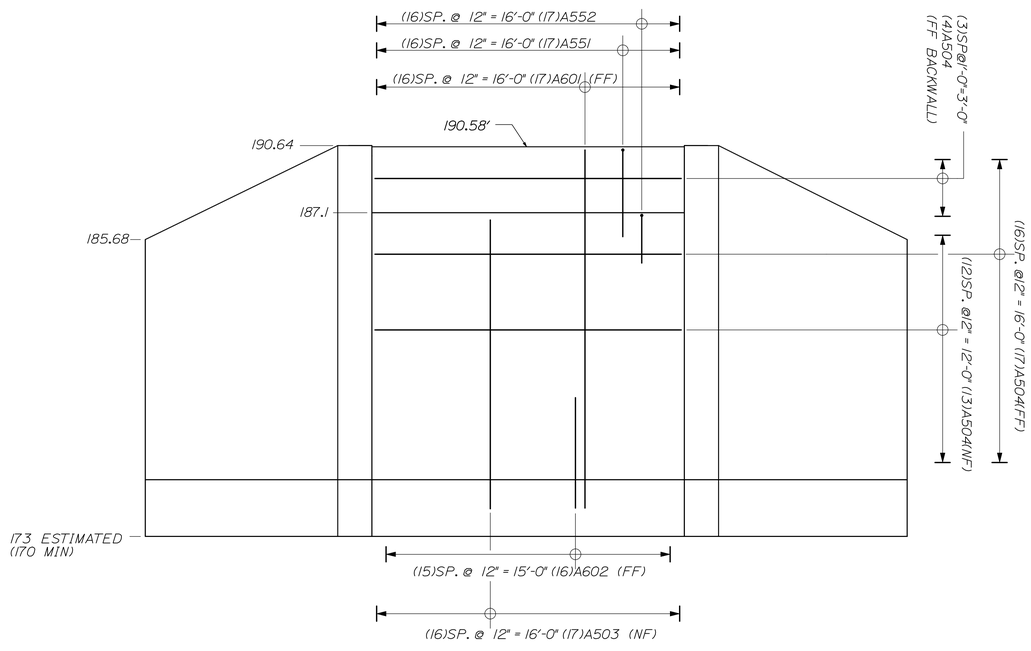


## ABUTMENT 1 ELEVATION

¼"=1'-0"
Space A605 and A552 to avoid Swedged Anchor Rod locations

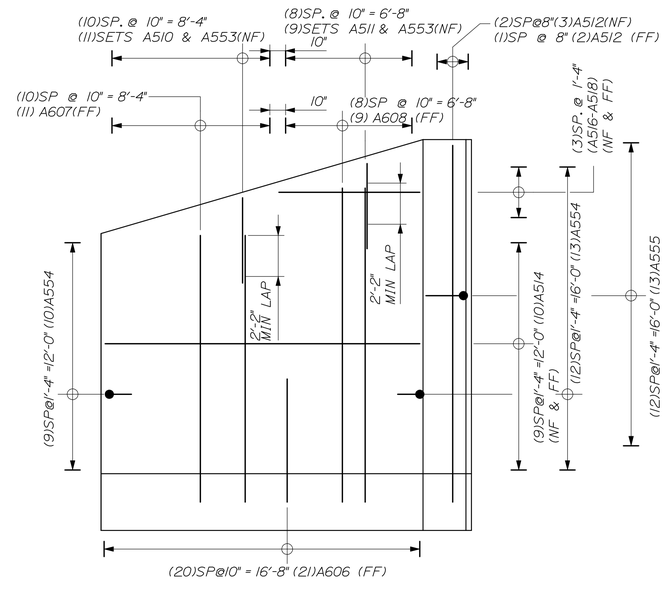


## ABUTMENT 1 WING ELEVATION

¼"=1'-0"


CALDERWOOD ENGINEERING, ETC.
STRUCTURAL ENGINEERING • DETAILING SERVICES
222 RIVER RD, RICHMOND, ME 04357 PH/FX (207)737-2007 / 737-2008


PREPARED FOR:

TOWN OF WILLIMANTIC

EARLEY BRIDGE
WILLIMANTIC, MAINE
PIN 017090.00

STATE OF MAINE
ERIC T. CALDERWOOD
No. 9099
LICENSED PROFESSIONAL ENGINEER

P.E. NUMBER 9099

DATE MAR 2010

| | BY | DATE |
|---|---|---|
| DESIGN-DETAILED | OGK | MAR 2010 |
| CHECKED-REVIEWED | ETC | APR 2010 |
| REVISIONS 1 | | |
| REVISIONS 2 | | |
| REVISIONS 3 | | |
| REVISIONS 4 | | |
| FIELD CHANGES | | |

# EARLEY BRIDGE
# WILLIMANTIC MAINE

## ABUTMENT 1

SHEET NUMBER

5

CALDERWOOD ENGINEERING
222 RIVER ROAD
RICHMOND, ME 04357
PH. (207) 737-2007 FAX (207) 737-2008


Filename: ...\005_ABUT 1.dgn
Workgroup: Structures Division
Username: Eric Calderwood
Date:6/7/2010

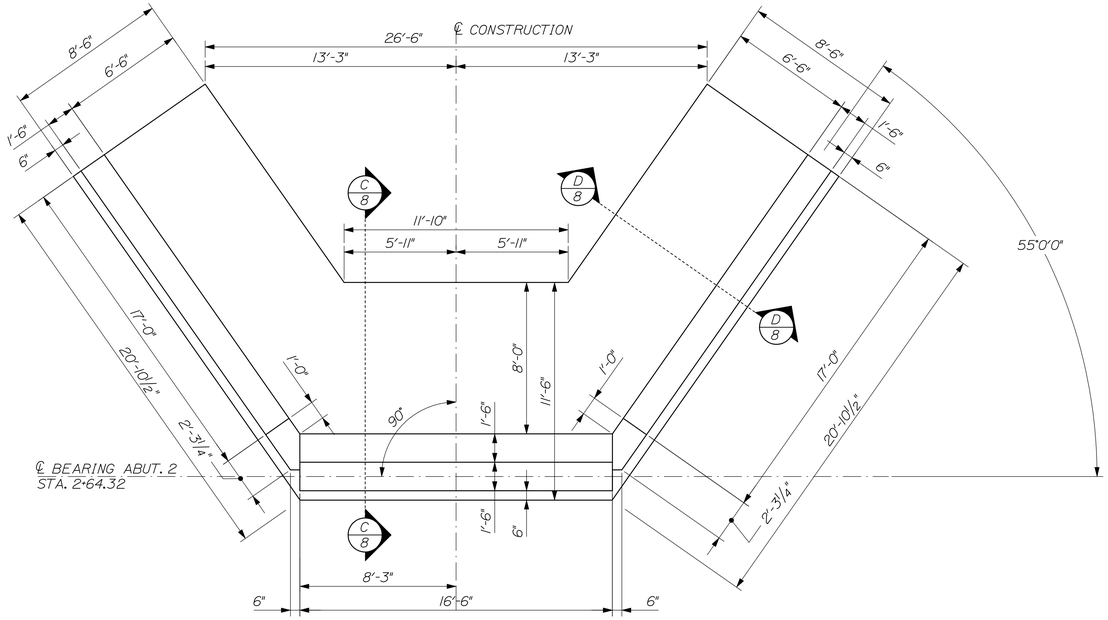


## ABUTMENT 2 PLAN

1/4"=1'-0"

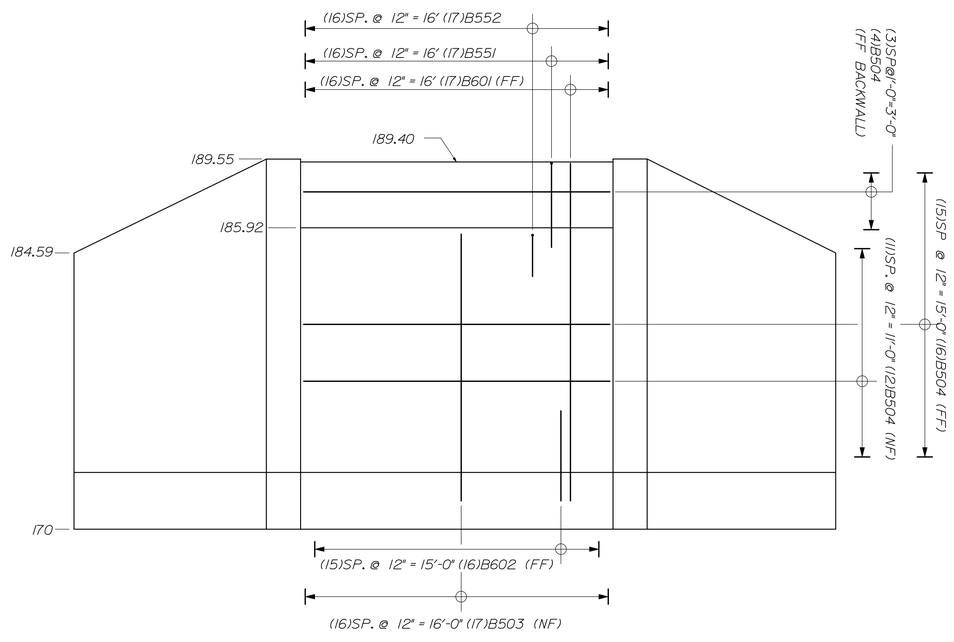


## ABUTMENT 2 ELEVATION

1/4"=1'-0"

Space B605 and B552 to aviod Swedged Anchor Rod locations

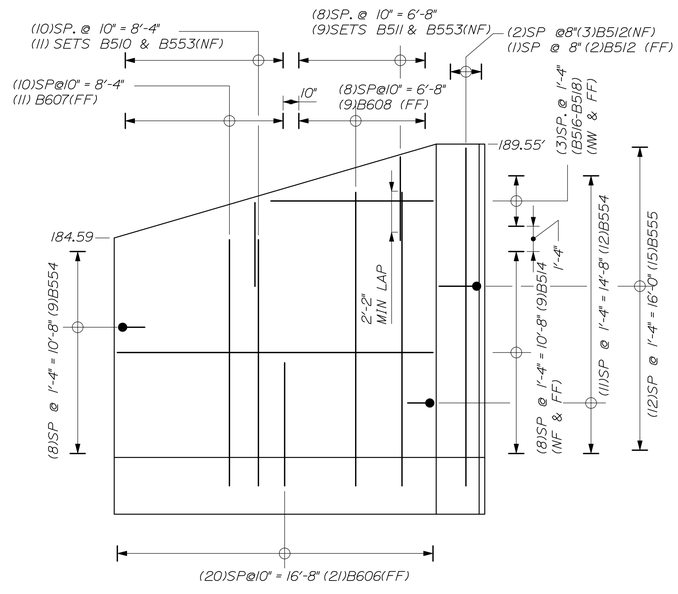


## ABUTMENT 2 TYPICAL WING ELEV.

1/4"=1'-0"


CALDERWOOD ENGINEERING, ETC.
STRUCTURAL ENGINEERING • DETAILING SERVICES
222 RIVER RD, RICHMOND, ME 04357 PH/FX (207)737-2007 / 737-2008


PREPARED FOR:

TOWN OF WILLIMANTIC

EARLEY BRIDGE
WILLIMANTIC, MAINE
PIN 017090.00

STATE OF MAINE
ERIC CALDERWOOD
No. 9099
LICENSED PROFESSIONAL ENGINEER

9099

P.E. NUMBER

DATE MAR 2010

| | | BY | DATE |
|---|---|---|---|
| DESIGN-DETAILED | OGK | OGK | MAR 2010 |
| CHECKED-REVIEWED | ETC | ETC | APR 2010 |
| REVISIONS 1 | | | |
| REVISIONS 2 | | | |
| REVISIONS 3 | | | |
| REVISIONS 4 | | | |
| FIELD CHANGES | | | |

# EARLEY BRIDGE
# WILLIMANTIC MAINE

## ABUTMENT 2

SHEET NUMBER

6

CALDERWOOD ENGINEERING
222 RIVER ROAD
RICHMOND, ME 04357
PH. (207) 737-2007 FAX (207) 737-2008


Filename: ...\006_ABUT 2.dgn
Workgroup: Structures Division
Username: Eric Calderwood
Date:6/7/2010

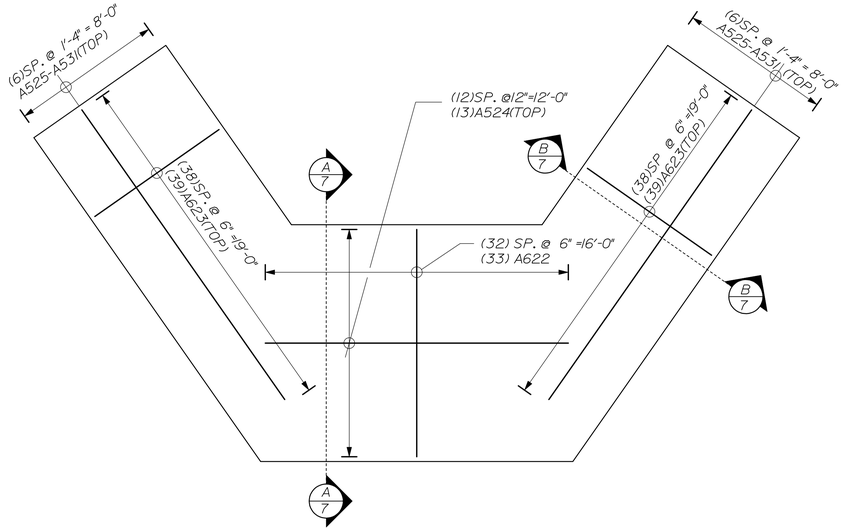


ABUTMET 1 FOOTING PLAN
1/4"=1'-0"

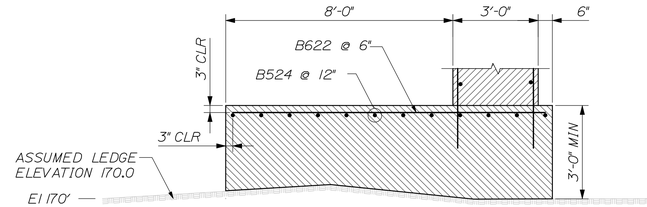


C/7 ABUTMENT 2 SECTION
3/8"=1'-0"

FILL CONCRETE MAY BE USED TO BRING THE BOTTOM OF THE FOOTING TO THE ASSUMED LEDGE ELEVATION, OR TO LEVEL OUT THE FOOTING AS REQUIRED. REPORT ANY DISCREPANCY BETWEEN THESE PLANS AND ACTUAL OBSERVED FIELD CONDITIONS TO THE ENGINEER OF RECORD IMMEDIATELY. DO NOT PROCEED WITH ANY DEPENDENT WORK UNTIL ANY SUCH REPORTED DISCREPANCY IS ADDRESSED TO THE SATISFACTION OF THE ENGINEER OF RECORD.

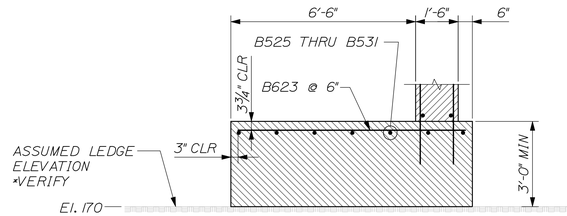


D/7 ABUTMENT 2 FOOTING SECTION @ WING
3/8"=1'-0"

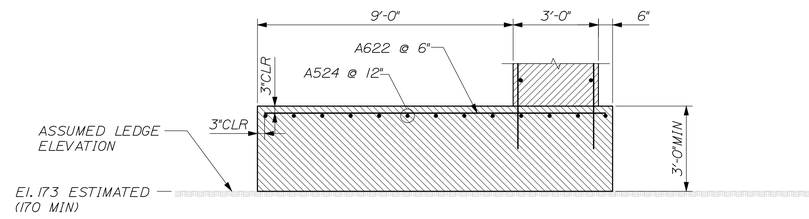


A/7 ABUTMENT 1 FOOTING SECTION
3/8"=1'-0"

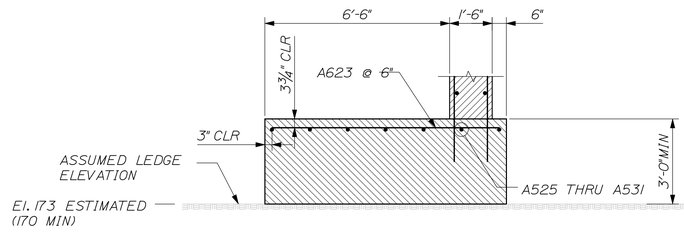


B/7 ABUTMENT 1 FOOTING SECTION @ WING
3/8"=1'-0"

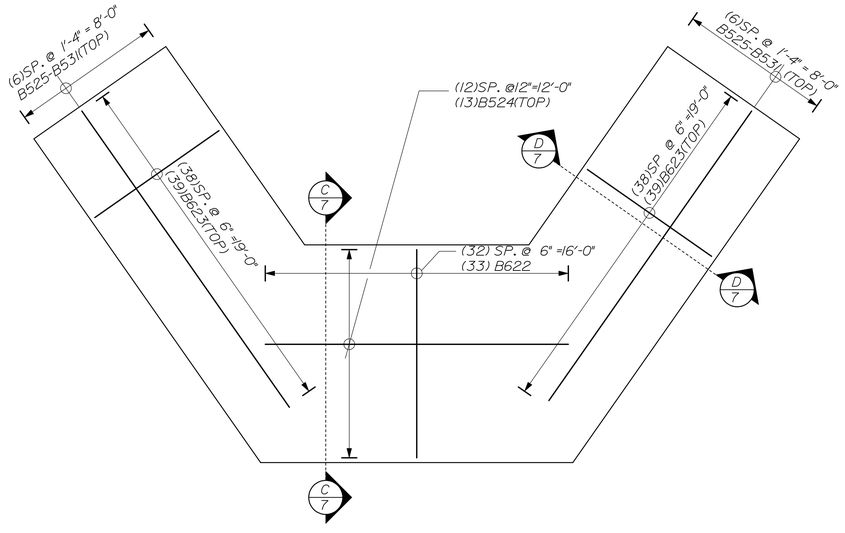


ABUTMENT 2 FOOTING PLAN
1/4"=1'-0"


CALDERWOOD ENGINEERING, ETC.
STRUCTURAL ENGINEERING • DETAILING SERVICES
222 RIVER RD, RICHMOND, ME 04357 PH/FX (207)737-2007 / 737-2008


PREPARED FOR:
TOWN OF WILLIMANTIC

EARLEY BRIDGE
WILLIMANTIC, MAINE
PIN 017090.00

STATE OF MAINE
ERIC A. CALDERWOOD
No. 9099
LICENSED PROFESSIONAL ENGINEER

9099

P.E. NUMBER

DATE MAR 2010

| | BY | DATE |
|---|---|---|
| DESIGN-DETAILED | OGK | MAR 2010 |
| CHECKED-REVIEWED | ETC | APR 2010 |
| REVISIONS 1 | | |
| REVISIONS 2 | | |
| REVISIONS 3 | | |
| REVISIONS 4 | | |
| FIELD CHANGES | | |

EARLEY BRIDGE
WILLIMANTIC MAINE

FOOTINGS

SHEET NUMBER
7


CALDERWOOD ENGINEERING
222 RIVER ROAD
RICHMOND, ME 04357
PH. (207) 737-2007 FAX (207) 737-2008



Filename: ...\007_FOOTINGS.dgn
Workgroup: Structures Division
Username: Eric Calderwood
Date:6/7/2010

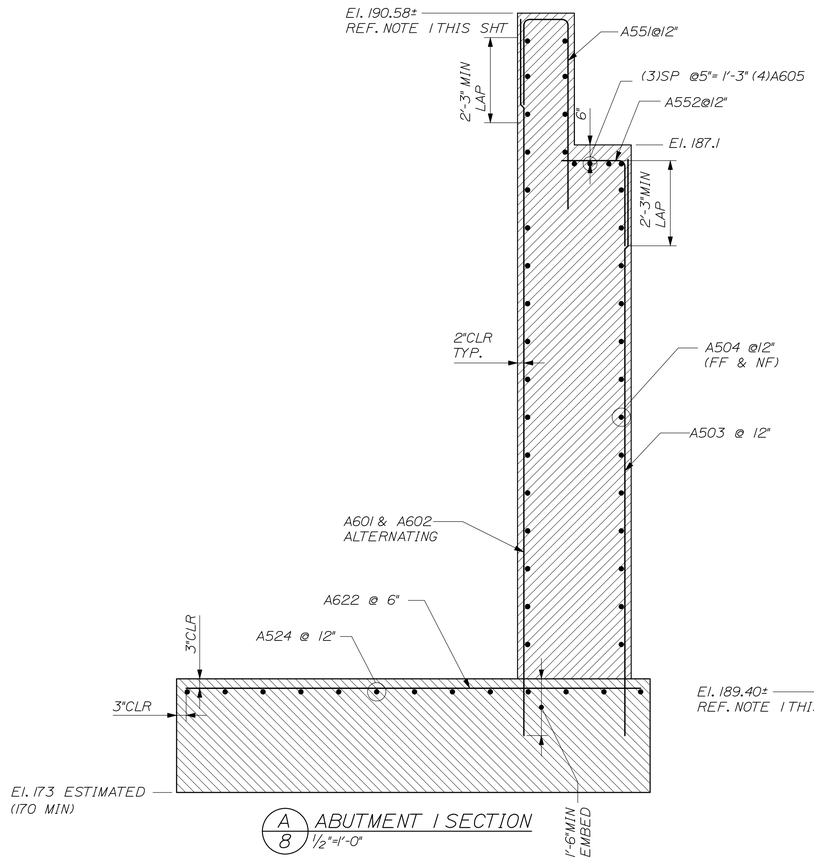


A 8 ABUTMENT 1 SECTION
1/2"=1'-0"

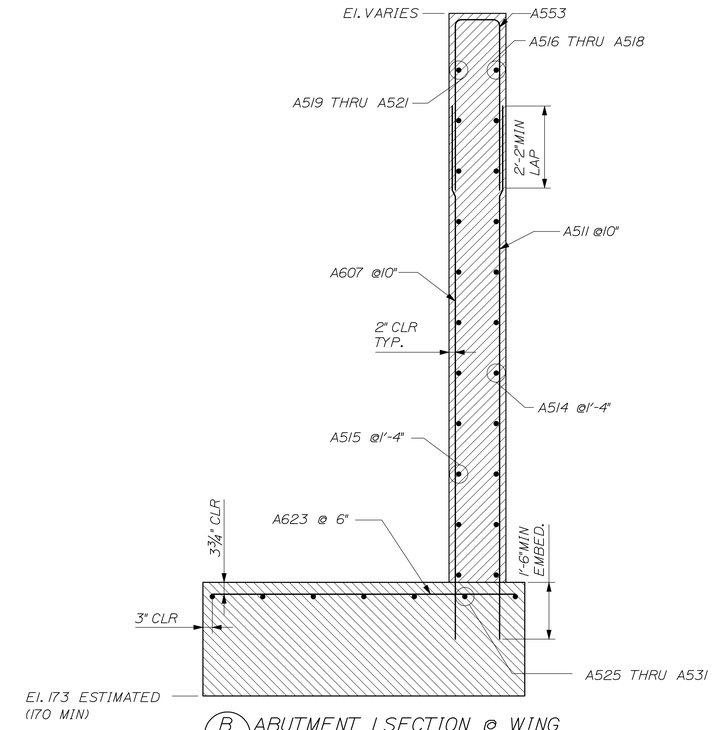


B 8 ABUTMENT 1 SECTION @ WING
1/2"=1'-0"

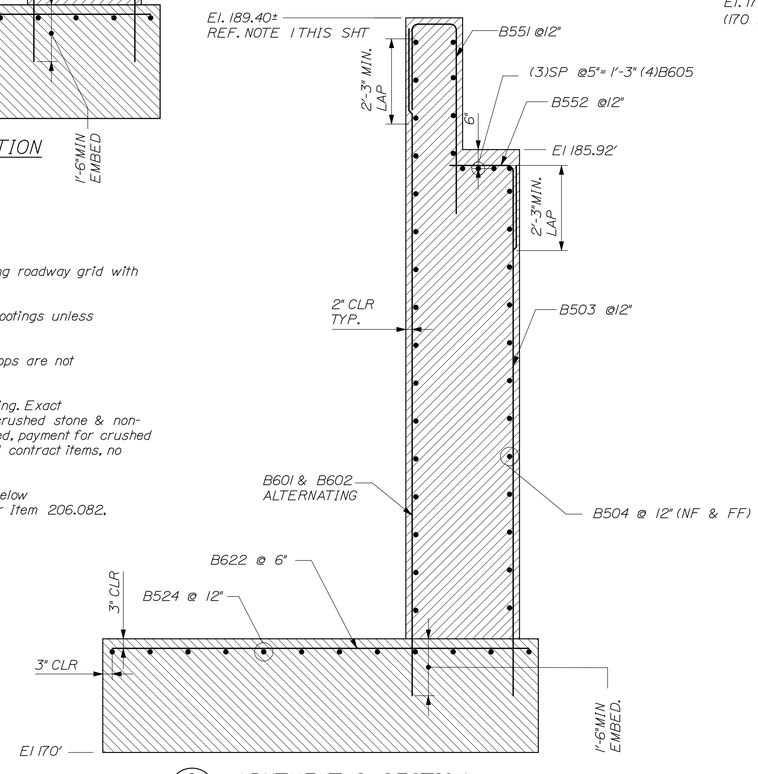


C 8 ABUTMENT 2 SECTION
1/2"=1'-0"

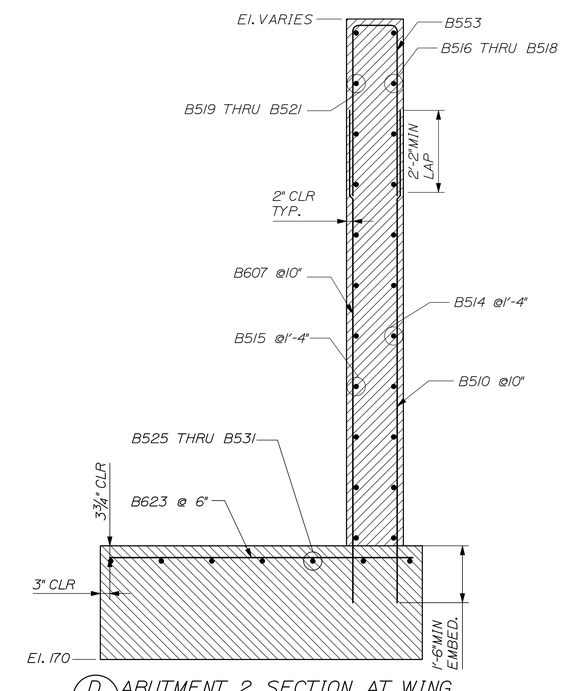


D 8 ABUTMENT 2 SECTION AT WING
1/2"=1'-0"

## ABUTMENT NOTES

1. Exact elevation to be determined in the field. 1/8" -1/4" higher than existing roadway grid with superstructure in place.
2. Reinforcing Steel shall have 2" cover in the Walls and 3" cover in the Footings unless otherwise noted.
3. Cover Joints in accordance with Standard Detail 502(01) where Waterstops are not required.
4. Place 4" diameter Drains in Breastwall and Wings at 10' maximum spacing. Exact location to be determined in the field, cover back side of drains with crushed stone & non-woven geotextile to prevent infiltration of backfill into drains as required. payment for crushed stone and non-woven geotextile shall be considered incidental to related contract items, no direct payment shall be made.
5. Structural Earth Excavation, Abutments and Retaining Walls, required below Elevation 170.00' will be paid for at 1.5 times the Contract unit price for Item 206.082, Structural Earth Excavation.
6. Abutments, Wings, and their Footings shall be backfilled with Granular Borrow. Pay limits will be the Structural Excavation Limits.
7. Maximum calculated footing pressure is 6 tons/ft².
8. Footings shall be cast on sound ledge that is not excessively sloped (i.e. over 1V:6H) if the ledge is sloped beyond those limits then the ledge should be benched or stepped to accomodate the footing, payment for rock excavation if required will be at 6x structural earth excavation as per standard specs.


CALDERWOOD ENGINEERING, ETC.
STRUCTURAL ENGINEERING • DETAILING SERVICES
222 RIVER RD, RICHMOND, ME 04357 PH/FX (207)737-2007 / 737-2008


PREPARED FOR:
TOWN OF WILLIMANTIC

EARLEY BRIDGE
WILLIMANTIC, MAINE
PIN 017090.00

STATE OF MAINE
ERIC J. CALDERWOOD
No. 9099
LICENSED PROFESSIONAL ENGINEER

P.E. NUMBER 9099
DATE MAR 2010

| | BY | DATE |
|---|---|---|
| DESIGN-DETAILED | OCK | MAR 2010 |
| CHECKED-REVIEWED | ETC | APR 2010 |
| REVISIONS 1 | | |
| REVISIONS 2 | | |
| REVISIONS 3 | | |
| REVISIONS 4 | | |
| FIELD CHANGES | | |

# EARLEY BRIDGE
# WILLIMANTIC MAINE
## ABUTMENT SECTIONS

SHEET NUMBER
8


CALDERWOOD ENGINEERING
222 RIVER ROAD
RICHMOND, ME 04357
PH. (207) 737-2007 FAX (207) 737-2008



Filename: ...\008_SECTIONS.dgn
Workgroup: Structures Division
Username: Eric Calderwood
Date:6/7/2010

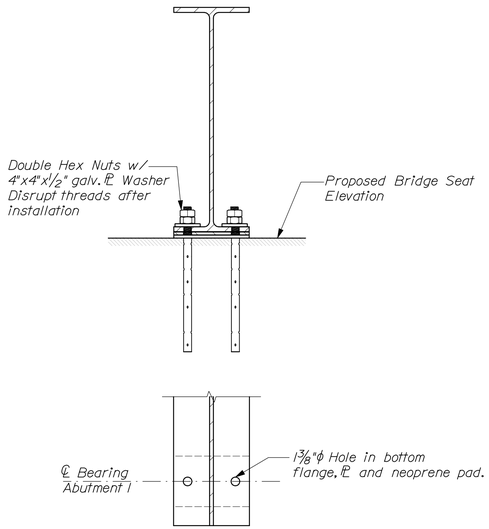


## Bearing Elevation and Plan at Abutment 1

1"=1'-0"

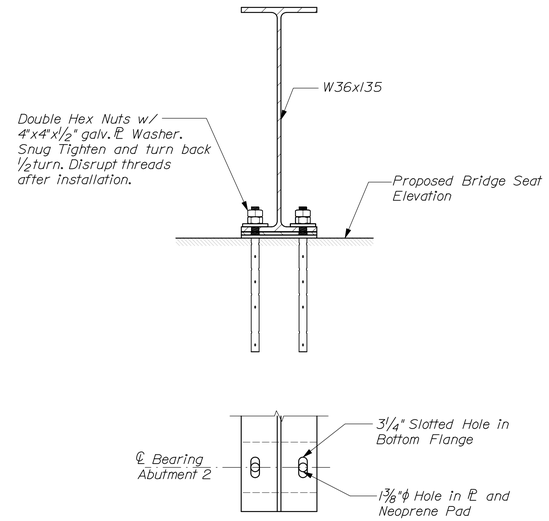


## Bearing Elevation and Plan at Abutment 2

1"=1'-0"

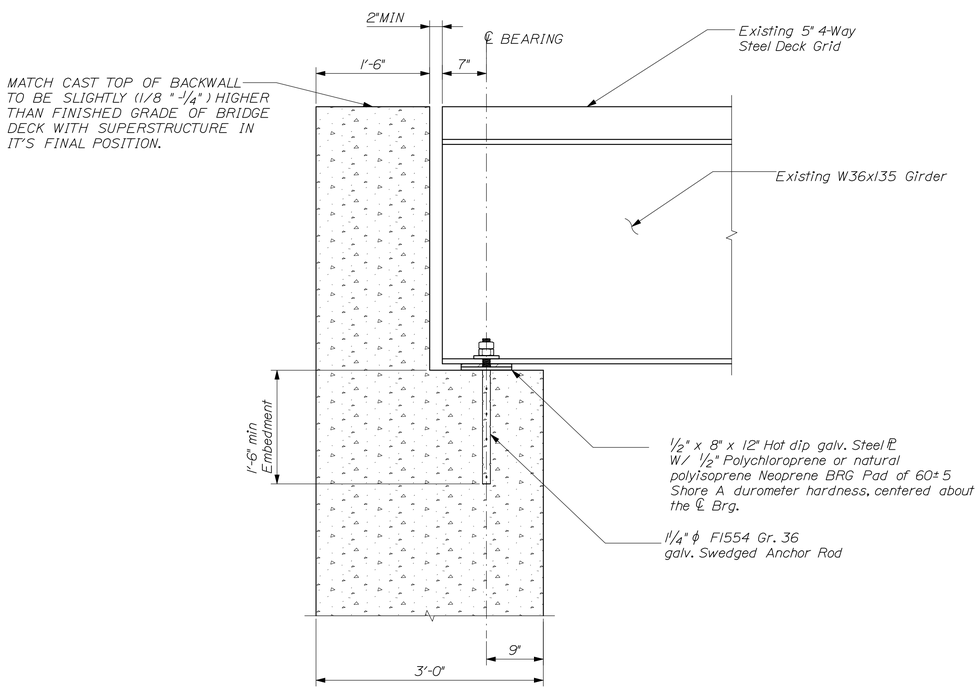


## ABUTMENT 1 SECTION

1"=1'-0"

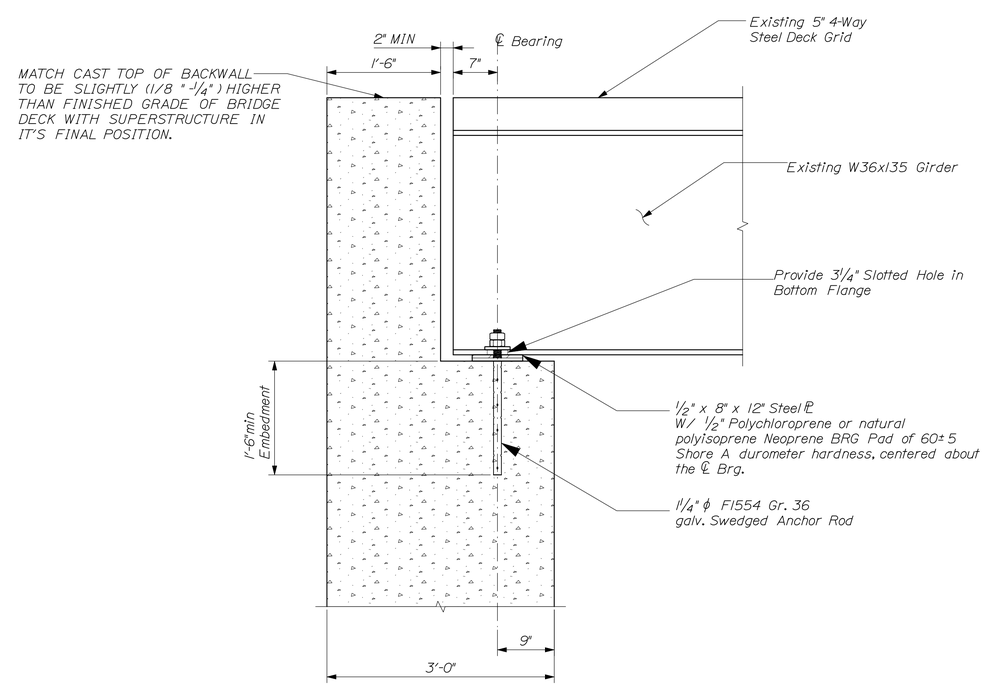


## ABUTMENT 2 SECTION

1"=1'-0"

CALDERWOOD ENGINEERING, ETC.
STRUCTURAL ENGINEERING • DETAILING SERVICES
222 RIVER RD, RICHMOND, ME 04357 PH/FX (207)737-2007 / 737-2008

PREPARED FOR:
TOWN OF WILLIMANTIC

EARLEY BRIDGE
WILLIMANTIC, MAINE
PIN 017090.00

STATE OF MAINE
ERIC J. CALDERWOOD
No. 9099
LICENSED
PROFESSIONAL ENGINEER

P.E. NUMBER 9099
DATE MAR 2010

| | BY | DATE |
|---|---|---|
| DESIGN-DETAILED | OGK | MAR 2010 |
| CHECKED-REVIEWED | ETC | APR 2010 |
| REVISIONS 1 | | |
| REVISIONS 2 | | |
| REVISIONS 3 | | |
| REVISIONS 4 | | |
| FIELD CHANGES | | |

EARLEY BRIDGE
WILLIMANTIC MAINE

BEARING DETAILS

SHEET NUMBER
9

CALDERWOOD ENGINEERING
222 RIVER ROAD
RICHMOND, ME 04357
PH. (207) 737-2007 FAX (207) 737-2008

Filename: ...\009_bearings.dgn Workgroup: Structures Division Username: Eric Calderwood Date:6/7/2010

## STRAIGHT BARS

| MARK | SZ | QTY. | LENGTH | TYPE | LOCATION |
|---|---|---|---|---|---|
| A601 | 6 | 17 | 18'-11" | STR. | ABUTMENT 1 VERTICAL STEEL (FF) |
| A602 | 6 | 16 | 5'-10" | STR. | ABUTMENT 1 VERTICAL STEEL (FF) |
| A503 | 5 | 17 | 15'-3" | STR. | ABUTMENT 1 VERTICAL STEEL (NF) |
| A504 | 5 | 35 | 16'-2" | STR. | ABUTMENT 1 LONGITUDINAL STEEL (NF & FF) |
| A605 | 6 | 4 | 16'-2" | STR. | ABUTMENT 1 LONGITUDINAL BRIDGE SEAT STEEL |
| A606 | 6 | 21 | 6'-6" | STR. | ABUTMENT 1 VERTICAL STEEL @ WINGS (FF) |
| A607 | 6 | 12 | 14'-1" | STR. | ABUTMENT 1 VERTICAL STEEL @ WINGS (FF) |
| A608 | 6 | 10 | 16'-7" | STR. | ABUTMENT 1 VERTICAL STEEL @ WINGS (FF) |
| A510 | 5 | 12 | 14'-1" | STR. | ABUTMENT 1 VERTICAL STEEL @ WINGS (NF) |
| A511 | 5 | 10 | 16'-7" | STR. | ABUTMENT 1 VERTICAL STEEL @ WINGS (NF) |
| A512 | 5 | 6 | 18'-10" | STR. | ABUTMENT 1 VERTICAL STEEL @ WINGS (NF) |
| A514 | 5 | 20 | 16'-8" | STR. | ABUTMENT 1 LONGITUDINAL STEEL @ WINGS (NF & FF) |
| A516 | 5 | 2 | 13'-7" | STR. | ABUTMENT 1 LONGITUDINAL STEEL @ WINGS (NF & FF) |
| A517 | 5 | 2 | 8'-9" | STR. | ABUTMENT 1 LONGITUDINAL STEEL @ WINGS (NF & FF) |
| A518 | 5 | 2 | 3'-9" | STR. | ABUTMENT 1 LONGITUDINAL STEEL @ WINGS (NF) & FF) |
| | | | | | |
| A622 | 6 | 33 | 12'-0" | STR. | ABUTMENT 1 TRANSVERSE FOOTING STEEL (TOP) |
| A623 | 6 | 78 | 8'-0" | STR. | ABUTMENT 1 TRANSVERSE FOOTING STEEL @WING(TOP) |
| A524 | 5 | 13 | 16'-0" | STR. | ABUTMENT 1 LONGITUDINAL FOOTING STEEL (TOP) |
| A525 | 5 | 2 | 12'-10" | STR. | ABUTMENT 1 LONGITUDINAL FOOTING STEEL @WING(TOP) |
| A526 | 5 | 2 | 14'-4" | STR. | ABUTMENT 1 LONGITUDINAL FOOTING STEEL @WING(TOP) |
| A527 | 5 | 2 | 15'-9" | STR. | ABUTMENT 1 LONGITUDINAL FOOTING STEEL @WING(TOP) |
| A528 | 5 | 2 | 17'-3" | STR. | ABUTMENT 1 LONGITUDINAL FOOTING STEEL @WING(TOP) |
| A529 | 5 | 2 | 18'-8" | STR. | ABUTMENT 1 LONGITUDINAL FOOTING STEEL @WING(TOP) |
| A530 | 5 | 2 | 20'-6" | STR. | ABUTMENT 1 LONGITUDINAL FOOTING STEEL @WING(TOP) |
| A531 | 5 | 2 | 20'-6" | STR. | ABUTMENT 1 LONGITUDINAL FOOTING STEEL @WING(TOP) |
| MARK | SZ | QTY. | LENGTH | TYPE | LOCATION |

## STRAIGHT BARS

| MARK | SZ | QTY. | LENGTH | TYPE | LOCATION |
|---|---|---|---|---|---|
| B601 | 6 | 17 | 17'-8" | STR. | ABUTMENT 2 VERTICAL STEEL (FF) |
| B602 | 6 | 16 | 4'-9" | STR. | ABUTMENT 2 VERTICAL STEEL (FF) |
| B503 | 5 | 17 | 14'-1" | STR. | ABUTMENT 2 VERTICAL STEEL (NF) |
| B504 | 5 | 32 | 16'-2" | STR. | ABUTMENT 2 LONGITUDINAL STEEL (FF & NF) |
| B605 | 6 | 4 | 16'-2" | STR. | ABUTMENT 2 LONGITUDINAL BRIDGE SEAT STEEL |
| B606 | 6 | 21 | 6'-6" | STR. | ABUTMENT 2 VERTICAL STEEL @ WINGS (FF) |
| B607 | 6 | 11 | 13'-0" | STR. | ABUTMENT 2 VERTICAL STEEL @ WINGS (FF) |
| B608 | 6 | 9 | 15'-6" | STR. | ABUTMENT 2 VERTICAL STEEL @ WINGS (FF) |
| B510 | 5 | 11 | 13'-0" | STR. | ABUTMENT 2 VERTICAL STEEL @ WINGS (NF) |
| B511 | 5 | 9 | 15'-7" | STR. | ABUTMENT 2 VERTICAL STEEL @ WINGS (NF) |
| B512 | 5 | 5 | 17'-10" | STR. | ABUTMENT 2 VERTICAL STEEL @ WINGS (NF) |
| B514 | 5 | 18 | 16'-8" | STR. | ABUTMENT 2 LONGITUDINAL STEEL @ WINGS (NF & FF) |
| B516 | 5 | 2 | 14'-5" | STR. | ABUTMENT 2 LONGITUDINAL STEEL @ WINGS (NF & FF) |
| B517 | 5 | 2 | 9'-7" | STR. | ABUTMENT 2 LONGITUDINAL STEEL @ WINGS (NF & FF) |
| B518 | 5 | 2 | 4'-9" | STR. | ABUTMENT 2 LONGITUDINAL STEEL @ WINGS (NF & FF) |
| | | | | | |
| B622 | 6 | 33 | 11'-0" | STR. | ABUTMENT 2 TRANSVERSE FOOTING STEEL |
| B623 | 6 | 78 | 8'-0" | STR. | ABUTMENT 2 TRANSVERSE FOOTING STEEL @ WING |
| B524 | 5 | 13 | 16'-0" | STR. | ABUTMENT 2 LONGITUDINAL FOOTING STEEL |
| B525 | 5 | 2 | 14'-0" | STR. | ABUTMENT 2 LONGITUDINAL FOOTING STEEL @ WING |
| B526 | 5 | 2 | 15'-3" | STR. | ABUTMENT 2 LONGITUDINAL FOOTING STEEL @ WING |
| B527 | 5 | 2 | 16'-6" | STR. | ABUTMENT 2 LONGITUDINAL FOOTING STEEL @ WING |
| B528 | 5 | 2 | 17'-10" | STR. | ABUTMENT 2 LONGITUDINAL FOOTING STEEL @ WING |
| B529 | 5 | 2 | 19'-1" | STR. | ABUTMENT 2 LONGITUDINAL FOOTING STEEL @ WING |
| B530 | 5 | 2 | 20'-4" | STR. | ABUTMENT 2 LONGITUDINAL FOOTING STEEL @ WING |
| B531 | 5 | 2 | 20'-4" | STR. | ABUTMENT 2 LONGITUDINAL FOOTING STEEL @ WING |
| MARK | SZ | QTY. | LENGTH | TYPE | LOCATION |

## BENT BARS

| MARK | SZ | QTY. | LENGTH | TYPE | A | B | C | D | E | F | G | H | O | R | LOCATION |
|---|---|---|---|---|---|---|---|---|---|---|---|---|---|---|---|
| A551 | 5 | 17 | 8'-5" | S | --- | 2'-3" | 1'-2" | 5'-0" | | | --- | | | | ABUTMENT 1 BACKWALL STIRRUP |
| A552 | 5 | 17 | 3'-11" | L | 2'-3" | 1'-8" | | | | | | | | | ABUTMENT 1 BREASTWALL STIRRUP |
| A553 | 5 | 19 | 10'-2" | S | --- | 4'-6" | 1'-2" | 4'-6" | | | --- | | | | ABUTMENT 1 WINGWALL STIRRUP |
| A554 | 5 | 23 | 5'-4" | S | --- | 2'-2" | 1'-0" | 2'-2" | | | --- | | | | ABUTMENT 1 WINGWALL STIRRUP |
| A555 | 5 | 13 | 4'-5" | CB | --- | 2'-0" | 5½" | 1'-7" | 9" | --- | | | 1'-2" | 1⅝" | ABUTMENT 1 WINGWALL STIRRUP |
| | | | | | | | | | | | | | | | |
| | | | | | | | | | | | | | | | |
| B551 | 5 | 17 | 8'-5" | S | --- | 2'-3" | 1'-2" | 5'-0" | | | --- | | | | ABUTMENT 2 BACKWALL STIRRUP |
| B552 | 5 | 17 | 3'-11" | L | 2'-3" | 1'-8" | | | | | | | | | ABUTMENT 2 BREASTWALL STIRRUP |
| B553 | 5 | 20 | 10'-2" | S | --- | 4'-6" | 1'-2" | 4'-6" | | | --- | | | | ABUTMENT 2 WINGWALL STIRRUP |
| B554 | 5 | 21 | 5'-4" | S | --- | 2'-2" | 1'-0 | 2'-2" | | | --- | | | | ABUTMENT 2 WINGWALL STIRRUP |
| B555 | 5 | 15 | 4'-5" | CB | --- | 2'-0" | 5½" | 1'-7" | 9" | --- | | | 1'-2" | 1⅝" | ABUTMENT 2 WINGWALL STIRRUP |
| | | | | | | | | | | | | | | | |
| MARK | SZ | QTY. | LENGTH | TYPE | A | B | C | D | E | F | G | H | O | R | LOCATION |

TYPE - BENDING DIAGRAMS

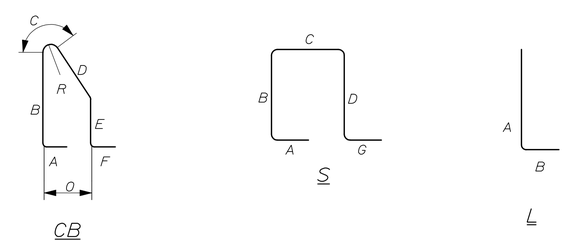



CALDERWOOD ENGINEERING, ETC.
STRUCTURAL ENGINEERING • DETAILING SERVICES
222 RIVER RD, RICHMOND, ME 04357 PH/FX (207)737-2007 / 737-2008


PREPARED FOR:

TOWN OF WILLIMANTIC

EARLEY BRIDGE
WILLIMANTIC, MAINE
PIN 017090.00

STATE OF MAINE
ERIC J. CALDERWOOD
No. 9099
LICENSED PROFESSIONAL ENGINEER

9099

P.E. NUMBER

DATE APR 2010

| | BY | DATE |
|---|---|---|
| DESIGN-DETAILED | OCK | MAR 2010 |
| CHECKED-REVIEWED | ETC | APR 2010 |
| REVISIONS 1 | | |
| REVISIONS 2 | | |
| REVISIONS 3 | | |
| REVISIONS 4 | | |
| FIELD CHANGES | | |

EARLEY BRIDGE
WILLIMANTIC MAINE

STEEL REINFORCING SCHEDULE

SHEET NUMBER

10

CALDERWOOD ENGINEERING
222 RIVER ROAD
RICHMOND, ME 04357
PH. (207) 737-2007 FAX (207) 737-2008

Filename: ...\010_rebar-sched.dgn Workgroup: Structures Division Username: Eric Calderwood Date:6/7/2010

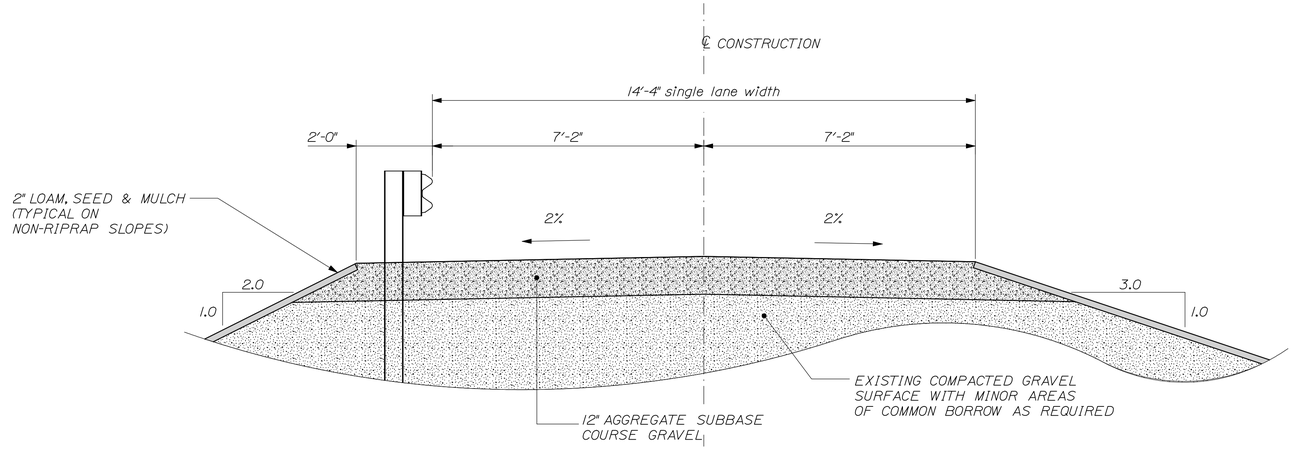


TYPICAL SECTION

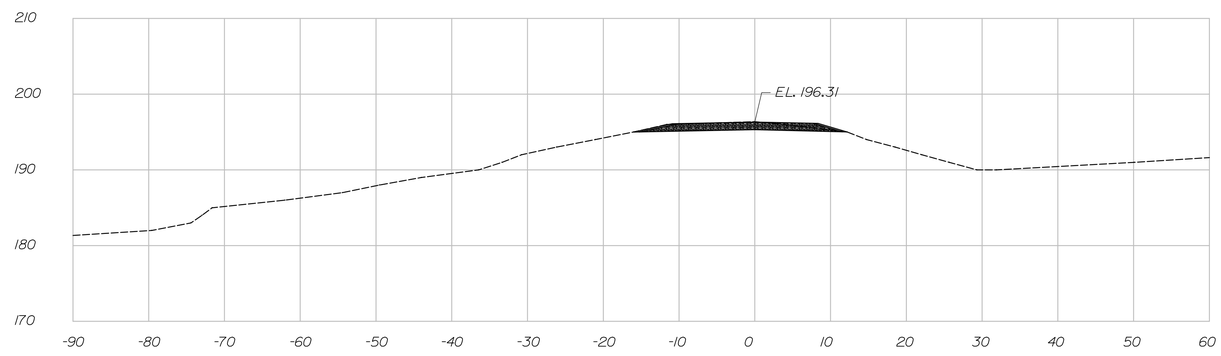


STATION 1+00

1" = 10'-0"

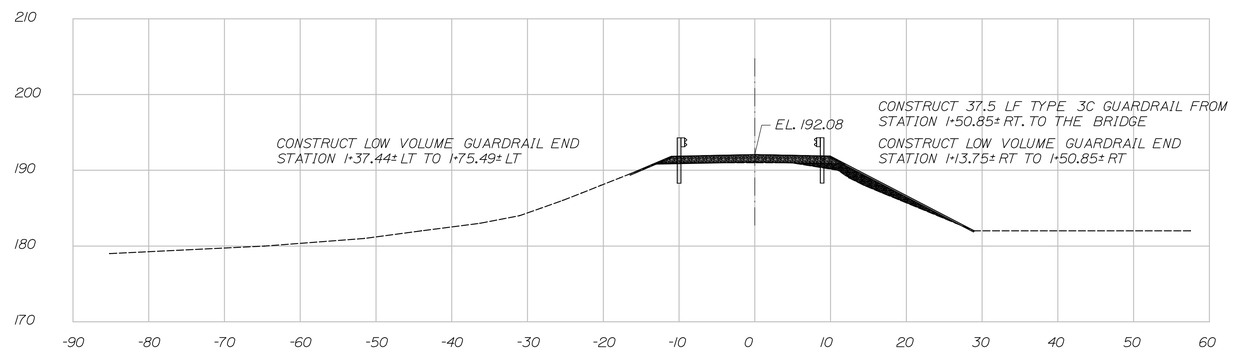


STATION 1+50

1" = 10'-0"


CALDERWOOD ENGINEERING, ETC.
STRUCTURAL ENGINEERING • DETAILING SERVICES
222 RIVER RD, RICHMOND, ME 04357 PH/FX (207)737-2007 / 737-2008


PREPARED FOR:

TOWN OF WILLIMANTIC

EARLEY BRIDGE
WILLIMANTIC, MAINE
PIN 017090.00

STATE OF MAINE
ERIC A. CALDERWOOD
No. 9099
LICENSED PROFESSIONAL ENGINEER

9099

P.E. NUMBER

DATE MAR 2010

| | BY | DATE |
|---|---|---|
| DESIGN-DETAILED | OCK | MAR 2010 |
| CHECKED-REVIEWED | ETC | APR 2010 |
| REVISIONS: 1 | | |
| REVISIONS: 2 | | |
| REVISIONS: 3 | | |
| REVISIONS: 4 | | |
| FIELD CHANGES | | |

# EARLEY BRIDGE
# WILLIMANTIC MAINE

## CROSS SECTIONS

SHEET NUMBER

11


CALDERWOOD ENGINEERING
222 RIVER ROAD
RICHMOND, ME 04357
PH. (207) 737-2007 FAX (207) 737-2008



Filename: ...\011_X-SECT.dgn Workgroup: Structures Division Username: Eric Calderwood Date:6/7/2010

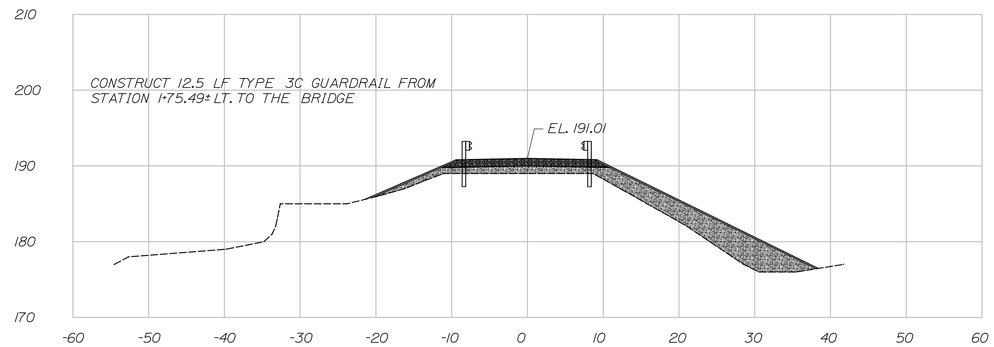


STATION 1+73.32

1" = 10'-0"

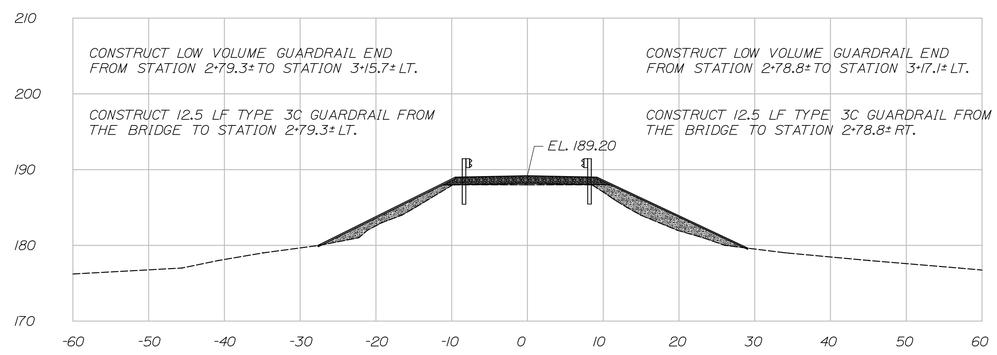


STATION 2+81.32

1" = 10'-0"

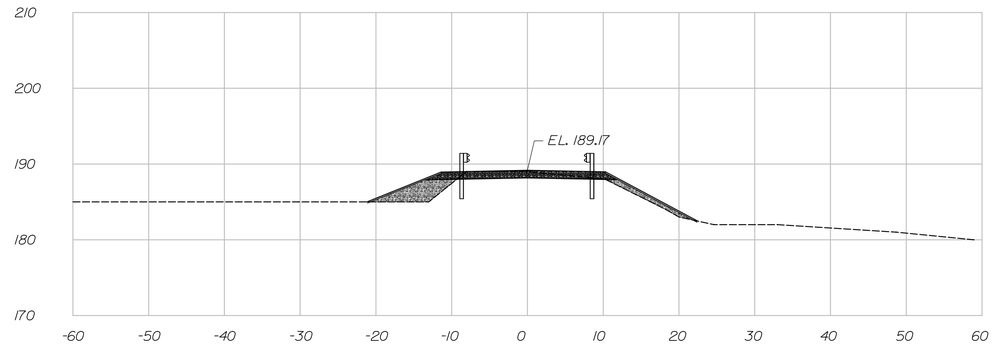


STATION 3+00

1" = 10'-0"

CALDERWOOD ENGINEERING, ETC.
STRUCTURAL ENGINEERING • DETAILING SERVICES
222 RIVER RD, RICHMOND, ME 04357 PH/FX (207)737-2007 / 737-2008

PREPARED FOR:

TOWN OF WILLIMANTIC

EARLEY BRIDGE
WILLIMANTIC, MAINE
PIN 017090.00

STATE OF MAINE
ERIC J. CALDERWOOD
No. 9099
LICENSED
PROFESSIONAL ENGINEER

9099

P.E. NUMBER

DATE MAR 2010

| | BY | DATE |
|---|---|---|
| DESIGN-DETAILED | OGK | MAR 2010 |
| CHECKED-REVIEWED | ETC | APR 2010 |
| REVISIONS 1 | | |
| REVISIONS 2 | | |
| REVISIONS 3 | | |
| REVISIONS 4 | | |
| FIELD CHANGES | | |

EARLEY BRIDGE
WILLIMANTIC MAINE

CROSS SECTIONS

SHEET NUMBER

12

CALDERWOOD ENGINEERING
222 RIVER ROAD
RICHMOND, ME 04357
PH. (207) 737-2007 FAX (207) 737-2008

Filename: ...\012_X-SECT.dgn Workgroup: Structures Division Username: Eric Calderwood Date:6/7/2010