STATE OF MAINE
DEPARTMENT OF TRANSPORTATION

SPECIFICATIONS

Design: Load and Resistance Factor Design per AASHTO LRFD Bridge Design Specifications, Fourth Edition 2007 and Interim Specifications through 2010.

TRAFFIC DATA

Current (2010) AADT	890
Future (2030) AADT	1070
DHV - % of AADT	14
Design Hour Volume	150
Heavy Trucks (% of AADT)	26
Heavy Trucks (% of DHV)	21
Directional Distribution (% of DHV)	58
18 kip Equivalent P 2.0	279
18 kip Equivalent P 2.5	266
Design Speed (mph)	55

HYDROLOGIC DATA

Drainage Area	2.0 sq mi
Design Discharge (Q50)	571.2 cfs
Check Discharge (Q100)	810.4 cfs
Headwater Elevation (Q50)	492.4 ft
Headwater Elevation (Q100)	493.2 ft
Discharge Velocity (Q50)	13.7 fps
Discharge Velocity (Q100)	14.1 fps
Headwater Elevation (Q1.1)	487.5 ft
Discharge Velocity (Q1.1)	7.0 fps

MATERIALS

Concrete: Class "A"

Reinforcing Steel ASTM A 615/A 615M, Grade 60

BASIC DESIGN STRESSES

Concrete f 'c = 4,350 psi

Reinforcing Steel f y = 60,000 psi

UTILITIES

Bangor Hydro-Electric Company
Northern New England Telephone Operations, LLC.

MAINTENANCE OF TRAFFIC

Maintain two lanes of traffic at all times except for limited periods of alternating one-way traffic specified in the Special Provisions.

T5 R9 NWP (EBEEMEE)
PISCATAQUIS COUNTY
STINKING BROOK BRIDGE
OVER
STINKING BROOK
ROUTE 11
STATE PROJECT NO. 17088.00
PROJECT LENGTH 0.000 mi.
BRIDGE CULVERT REHABILITATION
BRIDGE NO. 3868

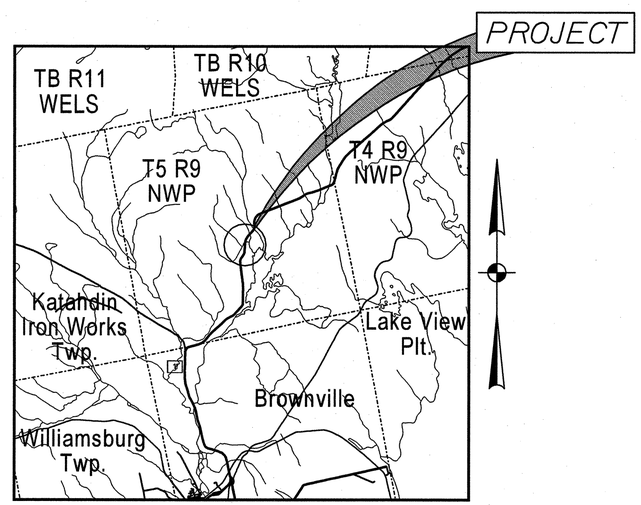

LOCATION MAP

2 0 2 4
Scale of Miles

LIST OF DRAWINGS

Title Sheet	1
Quantities & Notes	2
General Plan & Profile	3
Invert Lining Details	4
External Fish Weir & Pool Details	5
Fish Weir Details	6
Right of Way Map	7

SCOPE OF WORK

Rehabilitate existing steel structural plate pipe arch with concrete invert lining. Provide passage for fish with internal concrete fish weirs and external concrete weir and pool system. Construct plain riprap aprons upstream and downstream.

STATE OF MAINE
DEPARTMENT OF TRANSPORTATION
APPROVED
DATE
COMMISSIONER: 5/2/10
CHIEF ENGINEER: 5/3/10

STATE OF MAINE ★ Michael Harry Wight 8089 LICENSED PROFESSIONAL ENGINEER ★

SIGNATURE 8089
P.E. NUMBER 5/3/2010
DATE

PROJECT INFORMATION

PROGRAM	BRIDGE PROGRAM
PROJECT MANAGER	STEVE BODGE
DESIGNER	BRIAN NICHOLS
CONSULTANT	
PROJECT RESIDENT	
CONTRACTOR	
PROJECT COMPLETION DATE	

PIN 17088.00

17088.00

T5 R9 NWP (EBEEMEE)
STINKING BROOK BRIDGE

TITLE SHEET

SHEET NUMBER
1
OF 7

Filename:\00\BRIDGE\MSTA\001_Title.dgn Division: BRIDGE Username: brian.j.nichols Date:5/3/2010

ESTIMATED QUANTITIES			
ITEM NO.	DESCRIPTION	QUANTITY	UNIT
203.25	GRANULAR BORROW	10	CY
502.325	STRUCTURAL CONCRETE CULVERT INVERT LINING (17 CY)	1	LS
502.326	STRUCTURAL CONCRETE - FISH WEIRS (16 CY)	1	LS
503.12	REINFORCING STEEL, FABRICATED AND DELIVERED	4400	LB
503.13	REINFORCING STEEL, PLACING	4400	LB
511.07	COFFERDAM: UPSTREAM	1	LS
511.07	COFFERDAM: DOWNSTREAM	1	LS
610.08	PLAIN RIPRAP	45	CY
620.58	EROSION CONTROL GEOTEXTILE	130	SY
629.05	HAND LABOR, STRAIGHT TIME	40	HR
631.12	ALL PURPOSE EXCAVATOR (INCLUDING OPERATOR)	20	HR
631.172	TRUCK, LARGE (INCLUDING OPERATOR)	20	HR
639.19	FIELD OFFICE TYPE B	1	EA
652.31	TYPE I BARRICADE	10	EA
652.33	DRUM	10	EA
652.34	CONE	20	EA
652.35	CONSTRUCTION SIGNS	300	SF
652.361	MAINTENANCE OF TRAFFIC CONTROL DEVICES (75 CD)	1	LS
652.38	FLAGGER	40	HR
656.75	TEMPORARY SOIL EROSION AND WATER POLLUTION CONTROL	1	LS
659.10	MOBILIZATION	1	LS

GENERAL CONSTRUCTION NOTES

1. For easements, construction limits and right of way lines, refer to Right of Way Map.

2. The clearing limits as shown on the plans are approximate. The exact limits will be established in the field by the Resident. Payment for clearing will be considered incidental to Contract items.

3 Project information referred to below may be accessed at the following MaineDOT web address: http://www.maine.gov/mdot/comprehensive-list-projects/project-information.php.

4. The existing bridge plans may be accessed at the MaineDOT web address. The plans are reproductions of the original drawings as prepared for the construction of the bridge. It is very unlikely that the plans will show any construction field changes or any alterations which may have been made to the bridge during its life span.

5. The hydrologic report of the bridge site may be accessed at the MaineDOT web address. The hydrologic report is based on MaineDOT's interpretation of the information obtained for the subject site. No assurance is given that the information or the conclusions of the report will be representative of actual conditions at the time of construction.

6. Quantities included for pay items measured and paid for by Lump Sum are estimated quantities and are provided by MaineDOT for informational purposes only. Lump Sum pay items will be paid for at the Contract Bid amount, with no addition or reduction in payment to the Contractor if the actual final quantities are different from the MaineDOT provided estimated quantities, except as follows:

a. If a Lump Sum pay item is eliminated, the requirements of Standard Specifications Section 109.2, Elimination of Items, will take precedence.

b. If other Contract Documents specifically allow a change in payment for a Lump Sum pay item, those requirements will be followed.

c. If a design change results in changes to estimated quantities for Lump Sum pay items, price adjustments will be made in accordance with Standard Specifications Section 109.7, Equitable Adjustments to Compensation.

STATE OF MAINE
DEPARTMENT OF TRANSPORTATION

17088.00

PIN 17088.00

BRIDGE NO. 3868

BRIDGE PLANS

PROJ. MANAGER		BY	DATE
DESIGN-DETAILED	BJN	BJN	
CHECKED-REVIEWED			
DESIGN2-DETAILED2			
DESIGN3-DETAILED3			
REVISIONS 1			
REVISIONS 2			
REVISIONS 3			
REVISIONS 4			
FIELD CHANGES			

SIGNATURE

P.E. NUMBER

DATE

STINKING BROOK BRIDGE
STINKING BROOK
T5 R9 NWP (EBEEMEE) PISCATAQUIS COUNTY

ESTIMATED QUANTITIES

SHEET NUMBER
2
OF 7

Filename: ...\bridge\vmsto\002_Estimate.dgn Division: BRIDGE Username: brian.j.nichols Date:5/3/2010

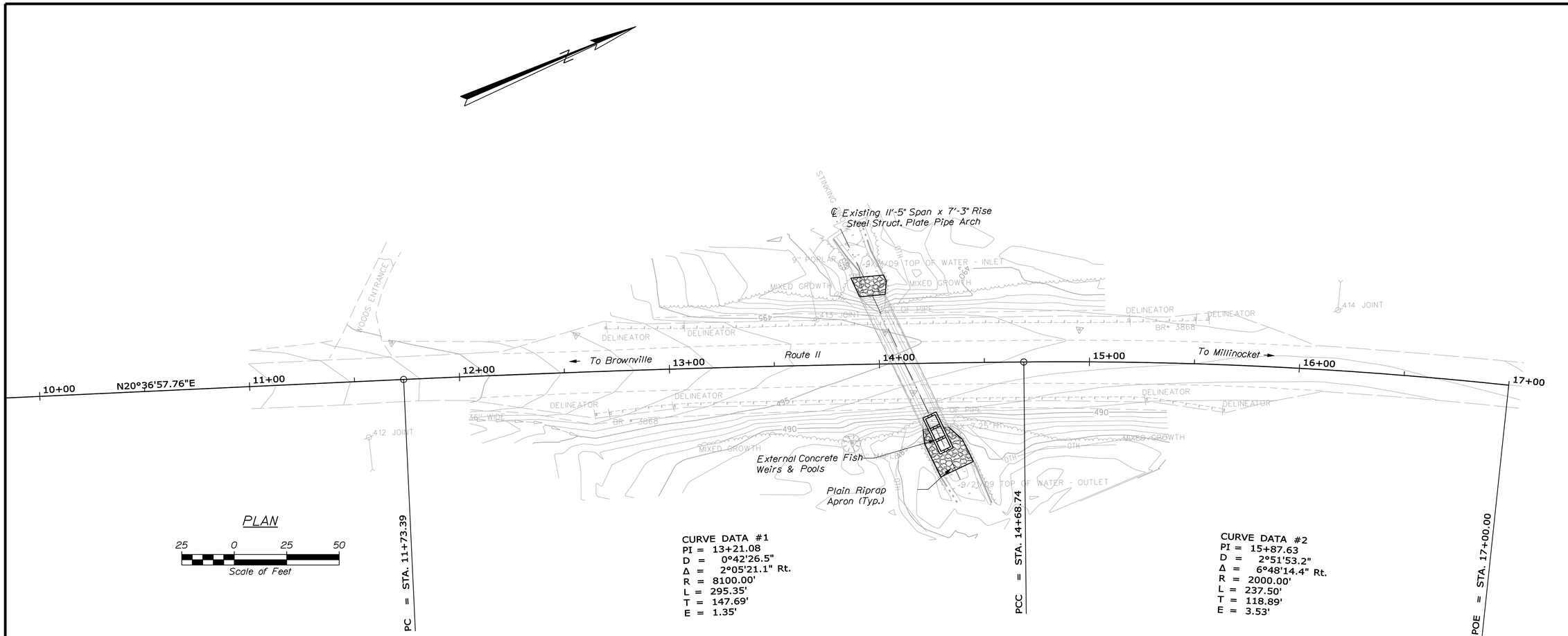

PLAN

25 0 25 50

Scale of Feet

CURVE DATA #1
PI = 13+21.08
D = 0°42'26.5"
Δ = 2°05'21.1" Rt.
R = 8100.00'
L = 295.35'
T = 147.69'
E = 1.35'

CURVE DATA #2
PI = 15+87.63
D = 2°51'53.2"
Δ = 6°48'14.4" Rt.
R = 2000.00'
L = 237.50'
T = 118.89'
E = 3.53'

PROFILE

Horiz. 25 0 25 50

Vert. 5 0 5 10

Scale of Feet

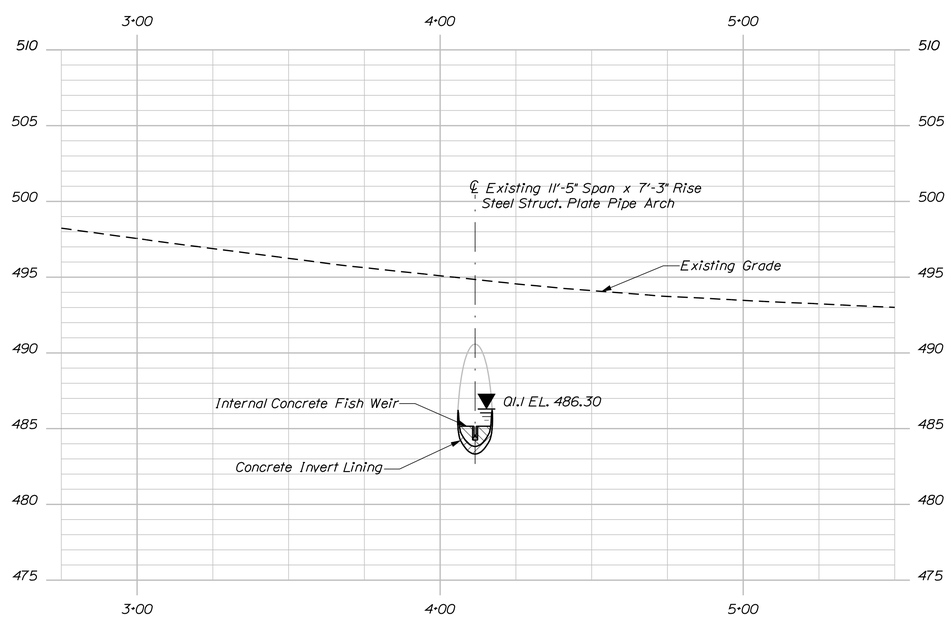

PROFILE

STATE OF MAINE
DEPARTMENT OF TRANSPORTATION

17088.00

PIN
17088.00

BRIDGE NO. 3868

BRIDGE PLANS

PROJ. MANAGER			
DESIGN-DETAILED	BJN	BJN	
CHECKED-REVIEWED			
DESIGN2-DETAILED2			
DESIGN3-DETAILED3			
REVISIONS 1			
REVISIONS 2			
REVISIONS 3			
REVISIONS 4			
FIELD CHANGES			

SIGNATURE

P.E. NUMBER

DATE

STINKING BROOK BRIDGE
STINKING BROOK
T5 R9 NWP (EBEEMEE) PISCATAQUIS COUNTY

GENERAL PLAN & PROFILE

SHEET NUMBER

3

OF 7

Filename: ...\00\bridge\msla\003_B0Plan1.dgn Division: BRIDGE Username: brian.j.nichols Date:5/3/2010

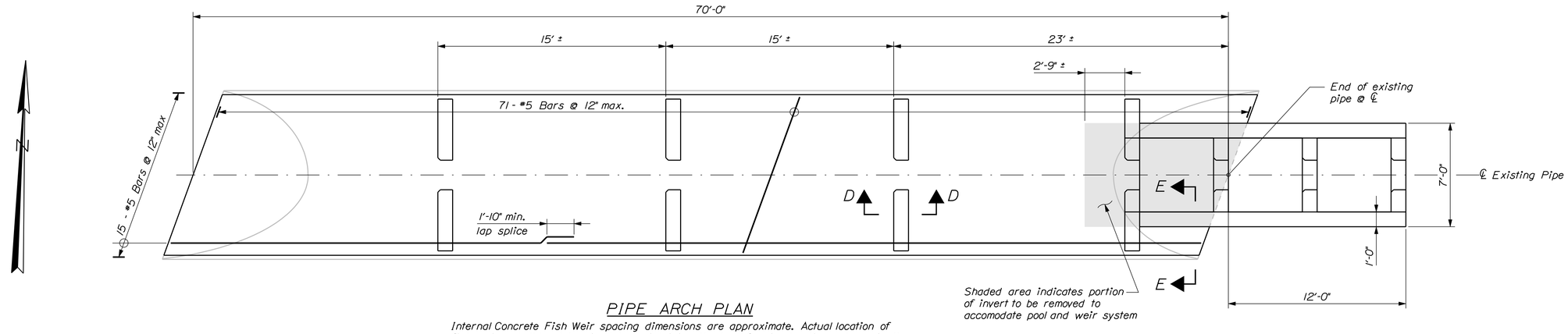

PIPE ARCH PLAN

Internal Concrete Fish Weir spacing dimensions are approximate. Actual location of fish weirs shall be determined by maintaining the top of weir elevations shown in the Longitudinal Pipe Arch Section and the fish wier height shown in Section "D-D"

Flow →

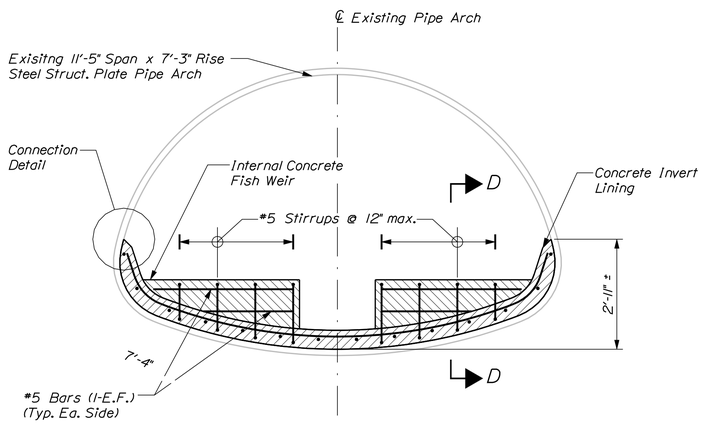

PIPE ARCH SECTION

See Pipe Arch Plan for invert reinforcement

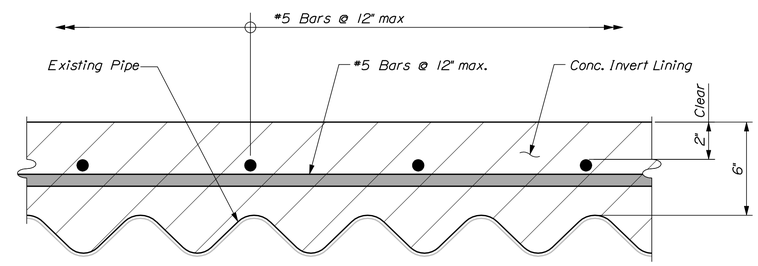

INVERT LINING SECTION

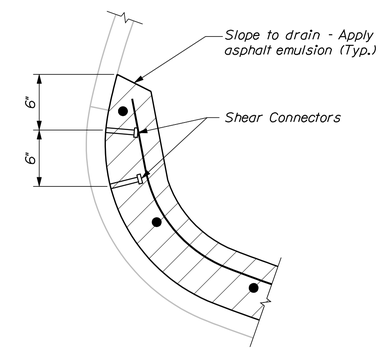

CONNECTION DETAIL

Note: Two rows of shear connectors shall be staggered longitudinally at 12" spacing along each side of the culvert. Shear connectors shall be ½" diameter x 3" studs or machine bolts welded to the crests of the corrugations. Approximately 142 shear connectors are required. Shear connections shall not be paid for directly. Payment will be considered incidental to item 502.325 Structural Concrete Culvert Invert Lining.

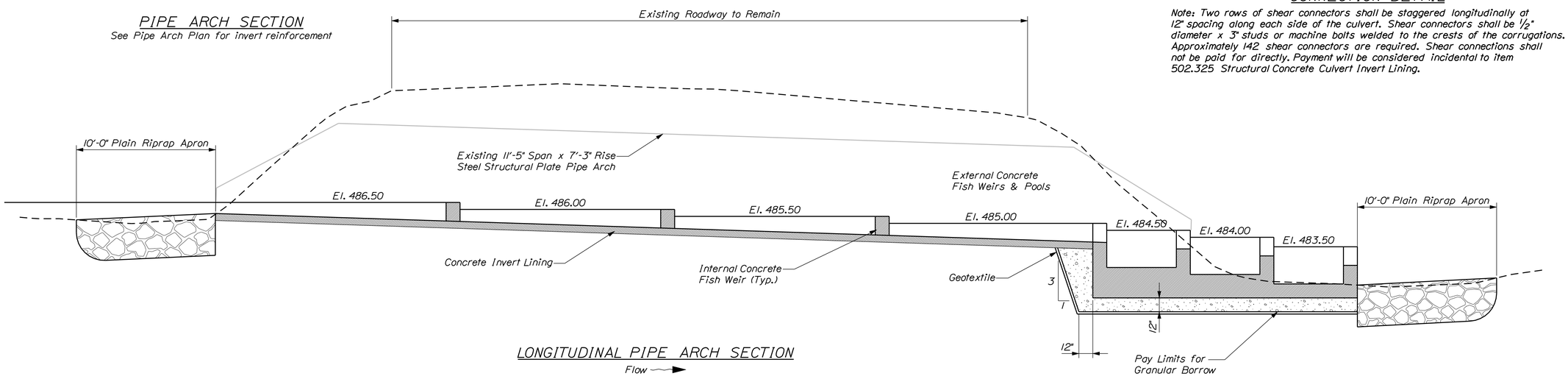

LONGITUDINAL PIPE ARCH SECTION

Flow →

STATE OF MAINE
DEPARTMENT OF TRANSPORTATION

17088.00

PIN 17088.00

BRIDGE NO. 3868

BRIDGE PLANS

PROJ. MANAGER			
	DRA.	BY	DATE
DESIGN-DETAILED	BJN	BJN	
CHECKED-REVIEWED			
DESIGN2-DETAILED2			
DESIGN3-DETAILED3			
REVISIONS 1			
REVISIONS 2			
REVISIONS 3			
REVISIONS 4			
FIELD CHANGES			

SIGNATURE

P.E. NUMBER

DATE

STINKING BROOK BRIDGE
STINKING BROOK
T5 R9 NWP (EBEEMEE) PISCATAQUIS COUNTY

INVERT LINING DETAILS

SHEET NUMBER

4

OF 7

Filename: ...\00\bridge\msta\004_Pipe_1.dgn Division: BRIDGE Username: brian.j.nichols Date:5/3/2010

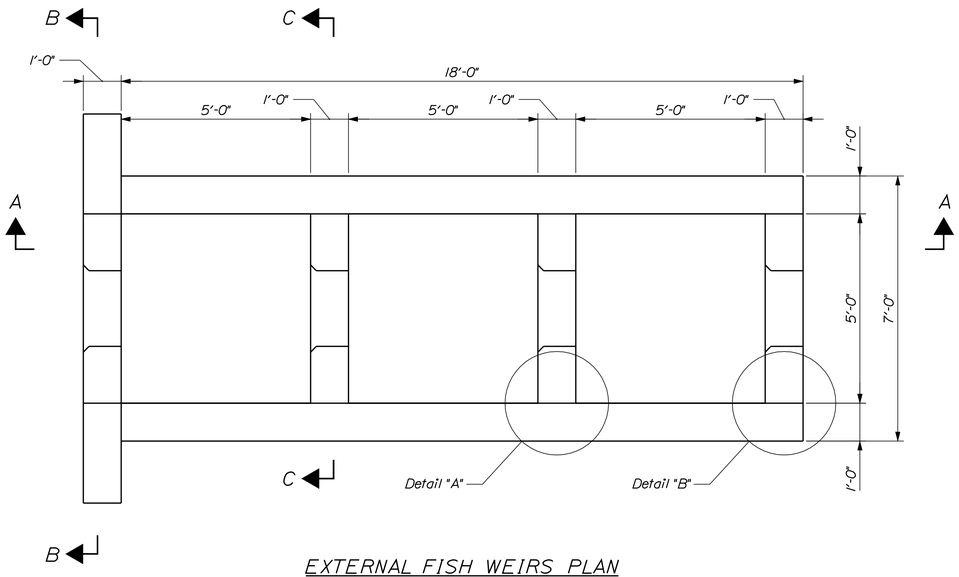

EXTERNAL FISH WEIRS PLAN

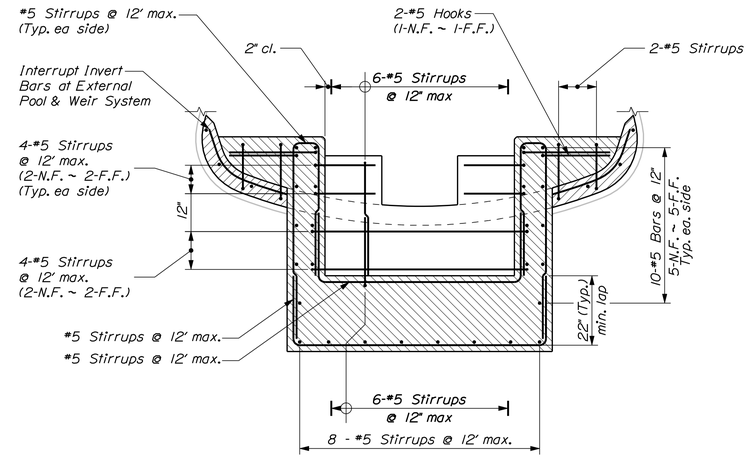

SECTION "B-B"

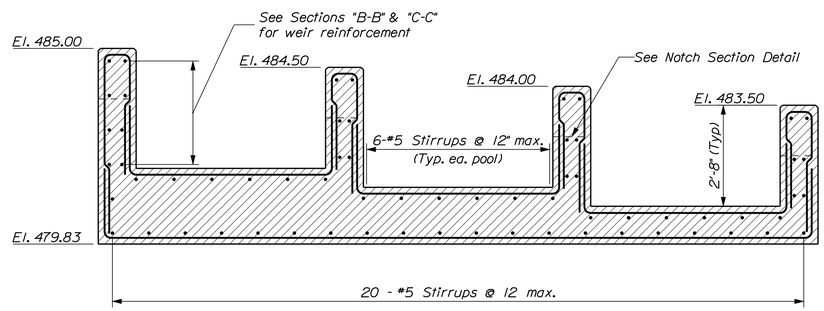

SECTION A-A

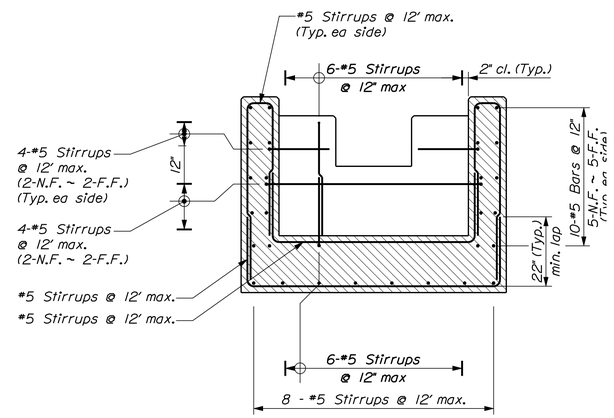

SECTION "C-C"

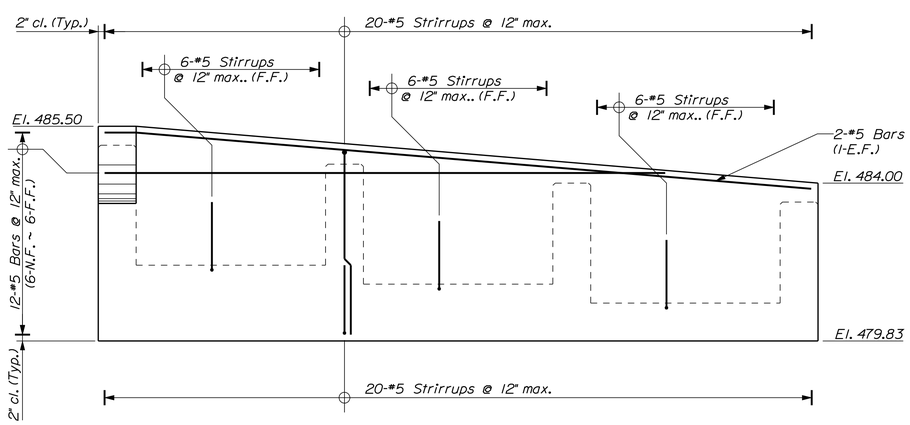

EXTERNAL FISH WEIR ELEVATION

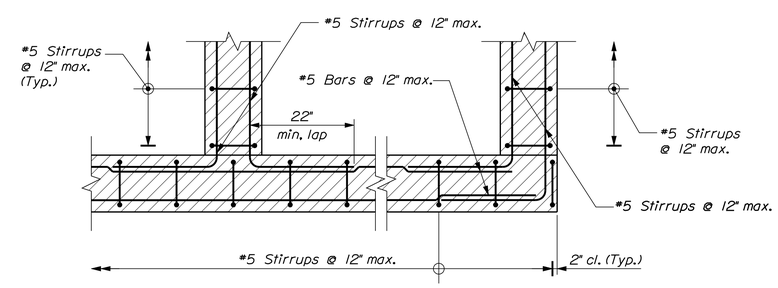

DETAIL "A" DETAIL "B"

STATE OF MAINE
DEPARTMENT OF TRANSPORTATION

17088.00

PIN 17088.00

BRIDGE NO. 3868

BRIDGE PLANS

	DRA	BY	DATE
PROJ. MANAGER			
DESIGN-DETAILED	BJN	BJN	
CHECKED-REVIEWED			
DESIGN2-DETAILED2			
DESIGN3-DETAILED3			
REVISIONS 1			
REVISIONS 2			
REVISIONS 3			
REVISIONS 4			
FIELD CHANGES			

SIGNATURE

P.E. NUMBER

DATE

STINKING BROOK BRIDGE
STINKING BROOK
T5 R9 NWP (EBEEMEE) PISCATAQUIS COUNTY

EXTERNAL FISH WEIR
AND POOL DETAILS

SHEET NUMBER

5

OF 7

Filename: ...\00\bridge\msta\005_Pipe_2.dgn Division: BRIDGE Username: brian.j.nichols Date:5/3/2010

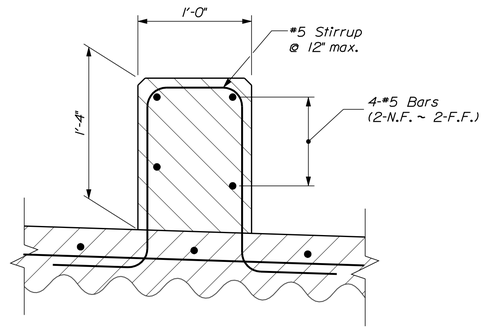

SECTION "D-D" @ ℄ PIPE

See Pipe Arch Plan for invert reinforcment

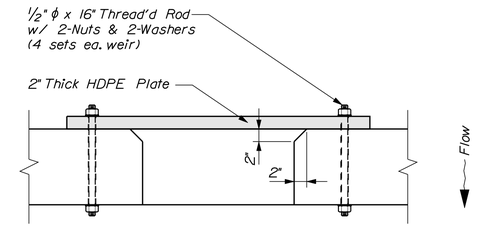

WEIR NOTCH PLAN

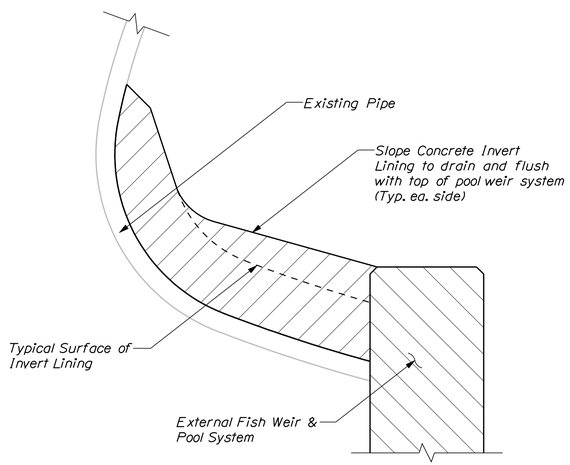

SECTION "E-E"

Reinforcing Steel omitted for clarity

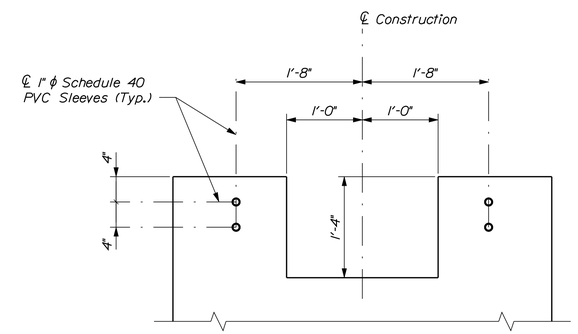

WEIR NOTCH ELEVATION

Only the notches of the three downstream weirs will have a level bottom. The bottom of the notches for the four upstream wiers shall conform to shape of the invert lining

HDPE WEIR PLATE NOTES

1. High Density Polyethylene (HDPE) shall be any commercially available, black, high- density polyethylene stock meeting the size requirements specified herein.

2. Each of the weir plates shall be clearly marked to identify their specific location. With the most downstream weir plate being #1, each plate shall be numbered sequentially in an upstream manner. Plates shall also be clearly marked to indicate direction of flow.

3. The four upstream HPDE plates shall be scribed and cut to fit snug against the circular concrete invert lining, for all internal weirs.

4. Each Plate shall be temporarily secured in its final position and holes drilled using the PVC sleeves as templates.

5. Each HDPE plate shall be furnished with (4) 5/8" ϕ x 16" threaded rod, (8) washers and (8) nuts. All hardware shall be galvanized in accordance with ASTM A153.

6. Payment for furnishing and machining of HDPE plates, as well as PVC sleeves and connection hardware, shall not be made directly, but shall be considered incidental to Item No. 502.326 - Concrete Fish Weirs

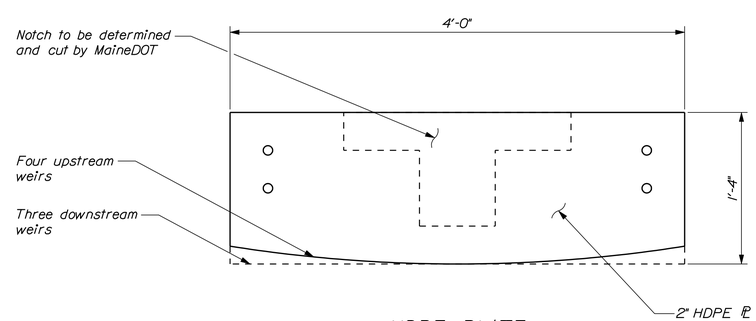

HDPE PLATE

STATE OF MAINE
DEPARTMENT OF TRANSPORTATION

17088.00

PIN 17088.00

BRIDGE NO. 3868

BRIDGE PLANS

PROJ. MANAGER		DRA	BY	DATE
DESIGN-DETAILED	BJN	BJN		
CHECKED-REVIEWED				
DESIGN2-DETAILED2				
DESIGN3-DETAILED3				
REVISIONS 1				
REVISIONS 2				
REVISIONS 3				
REVISIONS 4				
FIELD CHANGES				

SIGNATURE

P.E. NUMBER

DATE

STINKING BROOK BRIDGE
STINKING BROOK
T5 R9 NWP (EBEEMEE) PISCATAQUIS COUNTY

FISH WEIR DETAILS

SHEET NUMBER

6

OF 7

Filename: ...\00\bridge\msta\006_Pipe_3.dgn Division: BRIDGE Username: brian.j.nichols Date:5/3/2010

PRENTISS & CARLISLE MANAGEMENT CO., INC.
(ACTING AS AGENT FOR THE RECORD TITLE HOLDERS)
ITEM NO. (1)
DRAINAGE EASE. = 788± S.F. (1)
TOTAL AREA = VAST ACREAGE

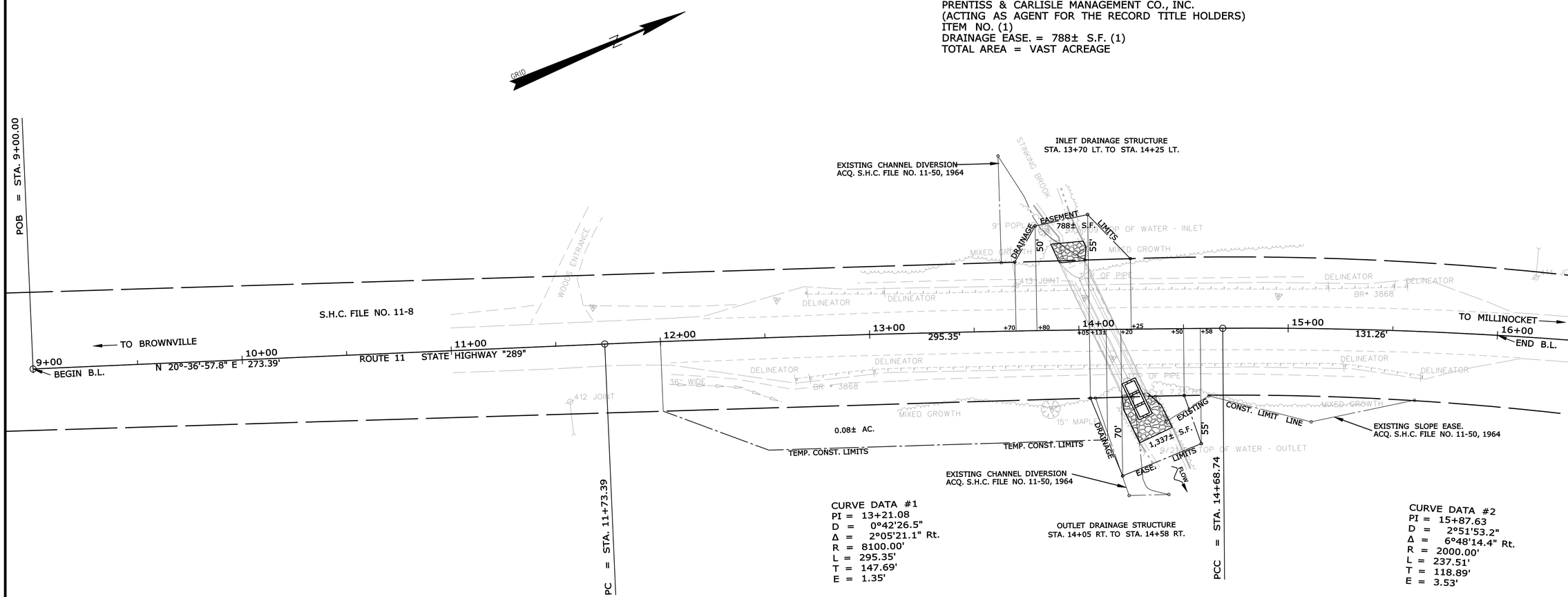

CURVE DATA #1
PI = 13+21.08
D = 0°42'26.5"
Δ = 2°05'21.1" Rt.
R = 8100.00'
L = 295.35'
T = 147.69'
E = 1.35'

CURVE DATA #2
PI = 15+87.63
D = 2°51'53.2"
Δ = 6°48'14.4" Rt.
R = 2000.00'
L = 237.51'
T = 118.89'
E = 3.53'

PRENTISS & CARLISLE MANAGEMENT CO., INC.
(ACTING AS AGENT FOR THE RECORD TITLE HOLDERS)
ITEM NO. (2)
DRAINAGE EASE. = 1,337± S.F. (1)
TEMP. CONST. RIGHTS = 0.08± AC. (1)
TOTAL AREA = VAST ACREAGE

EXISTING RIGHT-OF-WAY REFERENCES:

S.H.C. FILE NO. 11-8
S.H.C. FILE NO. 11-50

BRIDGE NO. 3868 — STINKING BROOK BRIDGE OVER STINKING BROOK — PIN 17088.00

SYMBOLS
- IP or IPF (IRON PIPE or PIN FOUND)
- S.T. (SEPTIC TANK)
- (ROW MONUMENT)
- BM (TRAVERSE POINT)
- WATER LINE
- GAS LINE
- ELECTRIC LINE
- TELEPHONE LINE
- SEWER LINE
- WELL (WELL)
- GRADING LIMIT LINE
- CONSTRUCTION LIMIT LINE
- PROPERTY LINE
- LIMITS OF WROUGHT PORTION (L.O.W.P.)
- EXISTING RIGHT OF WAY
- NEW RIGHT OF WAY
- NEW ROW WITHIN EXIST. ROW
- CONTROL OF ACCESS

ITEM	TECH	CHECKED
BASE MAP		
EXIST. R/W	PNS	
PROP. LINES		
AREAS	PNS	DSG

STATE OF MAINE
DEPARTMENT OF TRANSPORTATION
16 STATE HOUSE STATION - AUGUSTA, ME 04333-0016
T5 R9 NWP (EBEEMEE)
RIGHT OF WAY MAP

REVISIONS			
NO.	DATE	DESCRIPTION	BY

PLAN FILED IN PLAN BOOK PAGE COUNTY RECORD

NO.	GRANTOR	INSTRUMENT	DATE	BOOK	PAGE

DAVID A. COLE
COMMISSIONER
KENNETH L. SWEENEY
ACTING CHIEF ENGINEER
DATE

STATE HIGHWAY "289"
ROUTE 11
EBEEMEE TOWNSHIP PISCATAQUIS COUNTY
STATE PROJECT NO. 17088.00

JANUARY 2010 | RIGHT-OF-WAY MAP | D.O.T. FILE NO. 11-128
SCALE 1" = 25' | SHEET 1 OF 1

SHEET NUMBER
7
OF 7

Filename: ...\00\ROW\MSTA\001_RWPLAN1.dgn Division: BRIDGE Username: brian.j.nichols Date:5/3/2010