# STATE OF MAINE
# DEPARTMENT OF TRANSPORTATION

## SPECIFICATIONS

Design: Load and Resistance Factor Design per AASHTO LRFD Bridge Design Specifications, Fourth Edition 2007 and Interim Specifications through 2009.

## DESIGN LOADING

Live Load ..... HL - 93 Modified for STR I (Truck only increased 25%)

## MATERIALS

Concrete:
Precast ..... Class "P"
Reinforcing Steel ..... ASTM A 615/A 615M, Grade 60
Welded Wire Fabric ..... ASTM A 185 (WWF), Grade 60

## BASIC DESIGN STRESSES

Precast Concrete ..... f 'c = 5,000 psi min.
Reinforcing Steel ..... f y = 60,000 psi
Welded Wire Fabric ..... f y = 60,000 psi

## TRAFFIC DATA

Current (2010) AADT ..... 1870
Future (2030) AADT ..... 2240
DHV - % of AADT ..... 11%
Design Hour Volume ..... 246
Heavy Trucks (% of AADT) ..... 26%
Heavy Trucks (% of DHV) ..... 23%
Directional Distribution (% of DHV) ..... 56%
18 kip Equivalent P 2.0 ..... 828
18 kip Equivalent P 2.5 ..... 779
Design Speed (mph) ..... 60

## HYDROLOGIC DATA

Drainage Area ..... 4.06 sq mi
Design Discharge (Q50) ..... 522.9 cfs
Check Discharge (Q100) ..... 613.6 cfs
Headwater Elevation (Q50) ..... 289.99 ft
Headwater Elevation (Q100) ..... 290.77 ft
Discharge Velocity (Q50) ..... 11.55 fps
Discharge Velocity (Q100) ..... 12.18 fps
Headwater Elevation (Q1.1) ..... 285.08 ft
Discharge Velocity (Q1.1) ..... 4.05 fps

## UTILITIES

Central Maine Power Company
Somerset Telephone Company
Time Warner Cable

## MAINTENANCE OF TRAFFIC

Close bridge to traffic for maximum of 5 weeks and detour traffic on to state routes.

# EMBDEN
# SOMERSET COUNTY
# MOORE BRIDGE
## OVER
# JACKIN BROOK

## PROJECT NUMBER 16699.10
## PROJECT LENGTH 0.095 mi.
## BOX CULVERT FABRICATION & DELIVERY
## BRIDGE NO. 2579

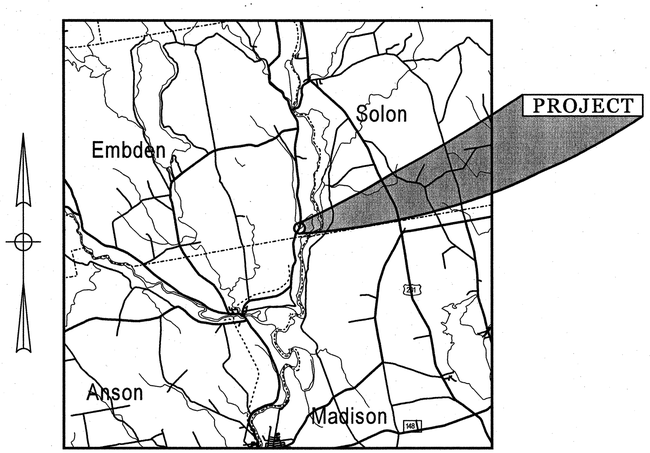


LOCATION MAP

2 0 2 4
Scale of Miles

## LIST OF DRAWINGS


Title Sheet ..... 1
Precast Concrete Box Plan ..... 2
Precast Concrete Box Details ..... 3


## SCOPE OF WORK

Fabrication and delivery of Precast Concrete Box Culvert.

STATE OF MAINE
DEPARTMENT OF TRANSPORTATION
APPROVED
COMMISSIONER: DATE 2/1/10
CHIEF ENGINEER: DATE 2/1/10

STATE OF MAINE Michael Harry Wight 8089 LICENSED PROFESSIONAL ENGINEER
Michael Wight
SIGNATURE 8089
P.E. NUMBER
2/4/2010
DATE

PROJECT INFORMATION

| | |
|---|---|
| PROGRAM | BRIDGE |
| PROJECT MANAGER | S. BRIDGE |
| DESIGNER | M. WIGHT |
| CONSULTANT | |
| PROJECT RESIDENT | |
| CONTRACTOR | |
| PROJECT COMPLETION DATE | |

PIN 16699.10

EMBDEN
MOORE BRIDGE
TITLE SHEET

SHEET NUMBER
1
OF 3

Filename:\00\BRIDGE\MSTA\001_Title.dgn Division: BRIDGE Username: richard.nimon Date:2/4/2010

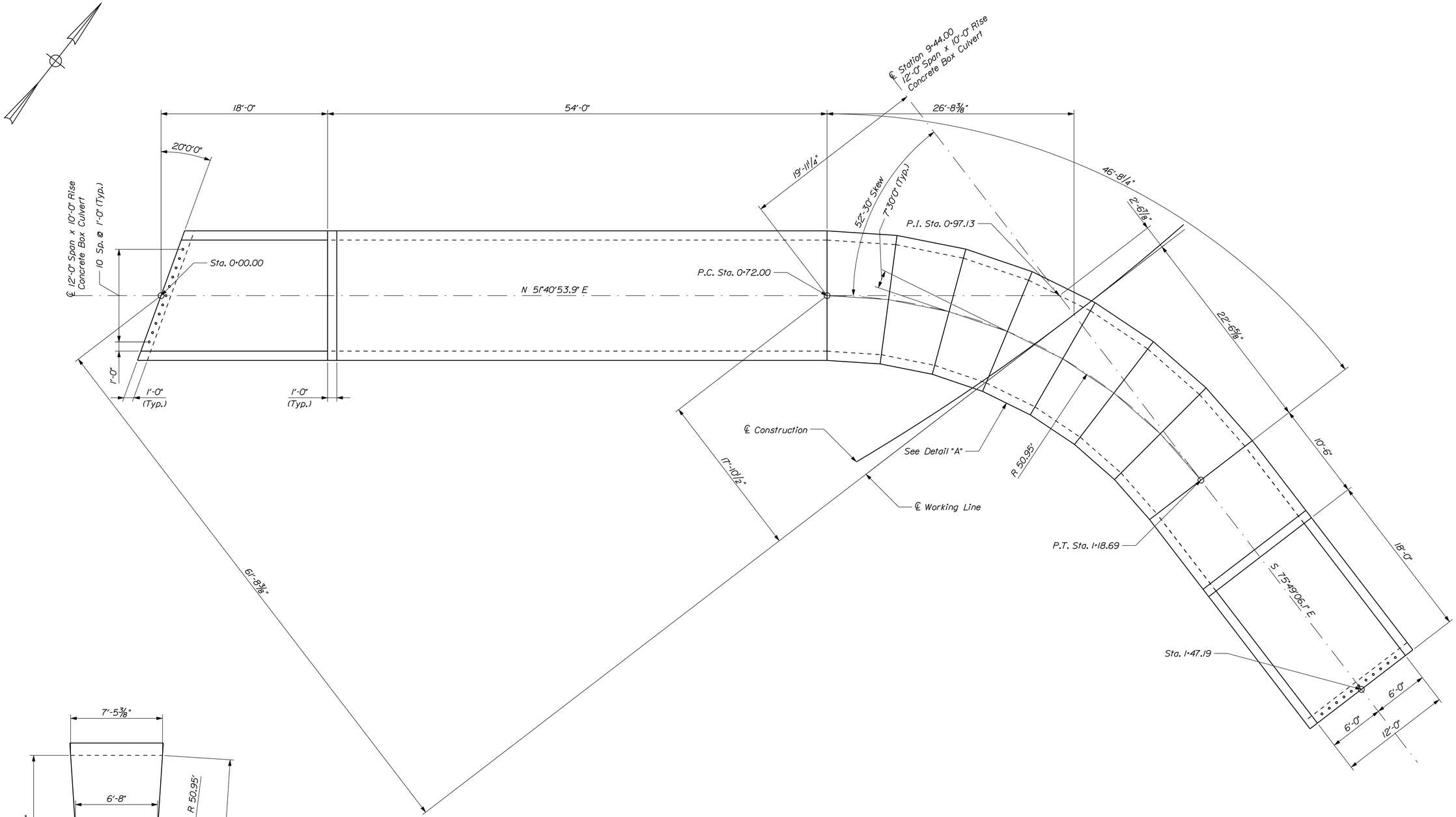


PRECAST CONCRETE BOX CULVERT PLAN

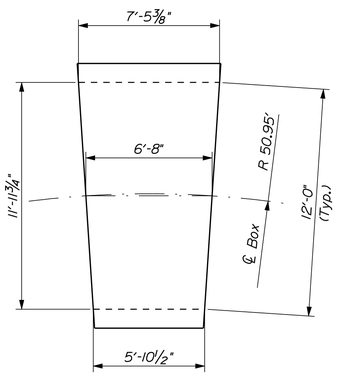


DETAIL "A"
(7 Wedge Shapes Needed)

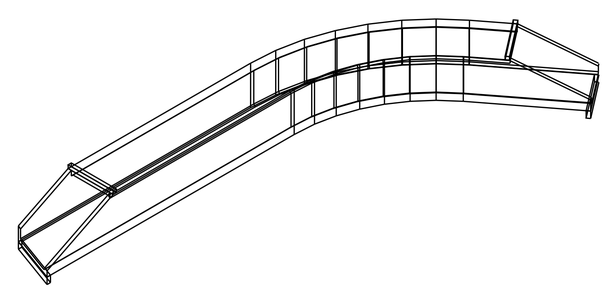

STATE OF MAINE
DEPARTMENT OF TRANSPORTATION

16699.10

PIN 16699.10

BRIDGE NO. 2579

BRIDGE PLANS

| | | | |
|---|---|---|---|
| PROJ. MANAGER | S. BOOGE | BY | DATE |
| DESIGN-DETAILED | M. WIGHT | R. NIMON | DEC 2009 |
| CHECKED-REVIEWED | | | |
| DESIGN2-DETAILED2 | | | |
| DESIGN3-DETAILED3 | | | |
| REVISIONS 1 | | | |
| REVISIONS 2 | | | |
| REVISIONS 3 | | | |
| REVISIONS 4 | | | |
| FIELD CHANGES | | | |

SIGNATURE

P.E. NUMBER

DATE

MOORE BRIDGE
JACKIN BROOK
EMBDEN SOMERSET COUNTY

PRECST CONCRETE BOX PLAN

SHEET NUMBER
2
OF 2

Filename: ...\msta\020_Precast_Box.dgn Division: BRIDGE Username: richard.nimon Date:2/4/2010

## PRECAST CONCRETE ARCHES OR BOXES NOTES

1. The precast units shall be designed to carry construction loadings with a minimum fill cover of 18 inches over the top of the units.

2. The construction, handling, and assembly of the precast units shall be in accordance with Special Provisions Section 534, Precast Structural Concrete, and with the manufacturer's specifications as applicable.

3. Install standard membrane waterproofing over the top and to 12 inches down the exterior sides of the precast units.

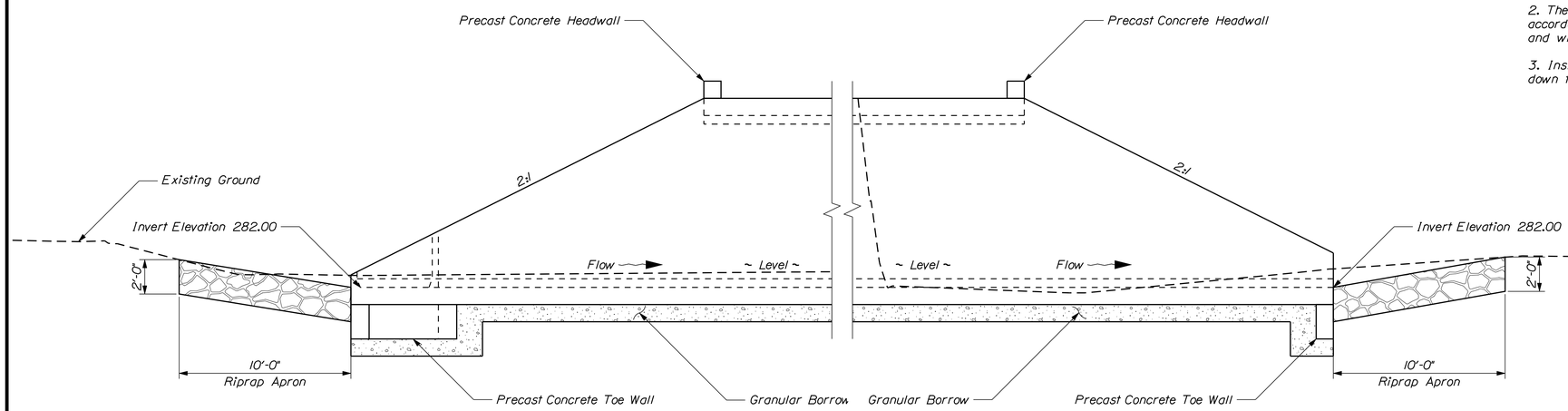


UPSTREAM ELEVATION

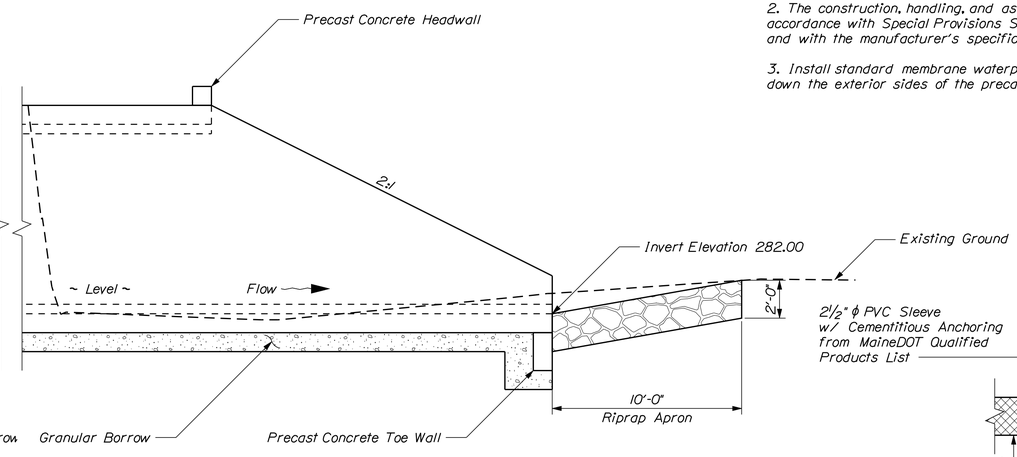


DOWNSTREAM ELEVATION

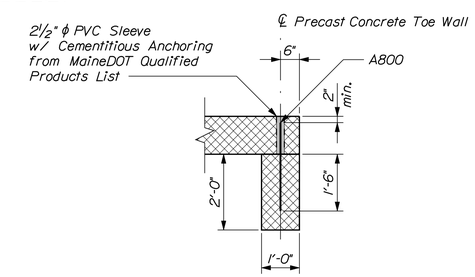


PRECAST CONCRETE TOE WALL DETAIL

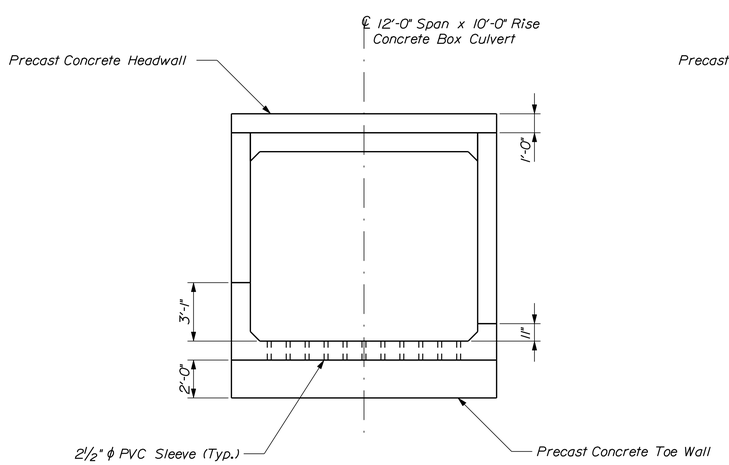


UPSTREAM END VIEW

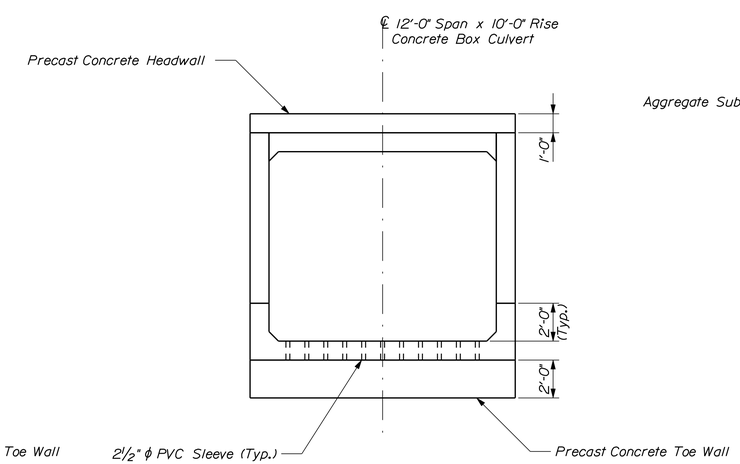


DOWNSTREAM END VIEW

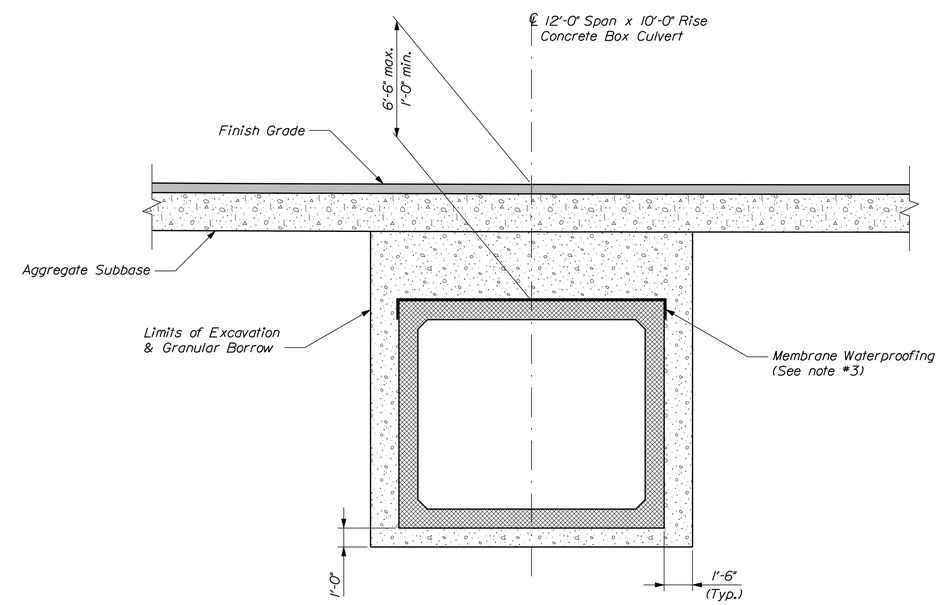


TYPICAL SECTION

STATE OF MAINE
DEPARTMENT OF TRANSPORTATION

16699.10

PIN 16699.10

BRIDGE NO. 2579

BRIDGE PLANS

| | | | |
|---|---|---|---|
| PROJ. MANAGER | S. BOOGE | BY | DATE |
| DESIGN-DETAILED | M. WIGHT | R. NIMON | DEC 2009 |
| CHECKED-REVIEWED | | | |
| DESIGN2-DETAILED2 | | | |
| DESIGN3-DETAILED3 | | | |
| REVISIONS 1 | | | |
| REVISIONS 2 | | | |
| REVISIONS 3 | | | |
| REVISIONS 4 | | | |
| FIELD CHANGES | | | |

SIGNATURE

P.E. NUMBER

DATE

MOORE BRIDGE
JACKIN BROOK
EMBDEN SOMERSET COUNTY

PRECAST CONCRETE BOX DETAILS

SHEET NUMBER

3

OF 3

Filename: ...\021_Precast_Box_Details.dgn Division: BRIDGE Username: richard.nimon Date:2/4/2010

# STATE OF MAINE
# DEPARTMENT OF TRANSPORTATION

## SPECIFICATIONS

Design: Load and Resistance Factor Design per AASHTO LRFD Bridge Design Specifications, Fourth Edition 2007 and Interim Specifications through 2009.

## DESIGN LOADING

Live Load ..... HL - 93 Modified

## TRAFFIC DATA

| | |
|---|---|
| Current (2010) AADT | 8450 |
| Future (2030) AADT | 10140 |
| DHV - % of AADT | 10 |
| Design Hour Volume | 1014 |
| Heavy Trucks (% of AADT) | 7 |
| Heavy Trucks (% of DHV) | 6 |
| Directional Distribution (% of DHV) | 55 |
| 18 kip Equivalent P 2.0 | 458 |
| 18 kip Equivalent P 2.5 | 436 |
| Design Speed (mph) | 55 |

## HYDROLOGIC DATA

| | |
|---|---|
| Drainage Area | 20.56 sq mi |
| Design Discharge (Q50) | 1381.5 cfs |
| Check Discharge (Q100) | 1589.1 cfs |
| Headwater Elevation (Q50) | 205.6 ft |
| Headwater Elevation (Q100) | 206.8 ft |
| Discharge Velocity (Q50) | 14.71 fps |
| Discharge Velocity (Q100) | 15.41 fps |
| Discharge (Q1.1) | 252.8 cfs |
| Headwater Elevation (Q1.1) | 200.2 ft |
| Discharge Velocity (Q1.1) | 2.85 fps |

## MATERIALS

Concrete:
Precast ..... Class "P"

Reinforcing Steel ..... ASTM A 615/A 615M, Grade 60
Welded Wire Fabric ..... ASTM A185 (WWF) Grade 60

## BASIC DESIGN STRESSES

Concrete ..... f 'c = 4,350 psi
Precast Concrete ..... f 'c = 5,000 psi

Reinforcing Steel ..... f y = 60,000 psi
Welded Wire Fabric ..... f y = 60,000 psi

## UTILITIES

N/A

## MAINTENANCE OF TRAFFIC

Maintain two 11'-0" wide lanes of two-way traffic using lane shifts.

## LIST OF DRAWINGS


Title Sheet ..... 1
Box Culvert Details ..... 2


# NEWPORT
# PENOBSCOT COUNTY
# MULLIGAN STREAM BRIDGE
## OVER
# MULLIGAN STREAM
## ROUTES 7 & 11
## PROJECT NO. BH-1672(210)X
## PROJECT LENGTH 0.000 mi.
## BOX CULVERT FABRICATION & DELIVERY
## BRIDGE NO. 6103

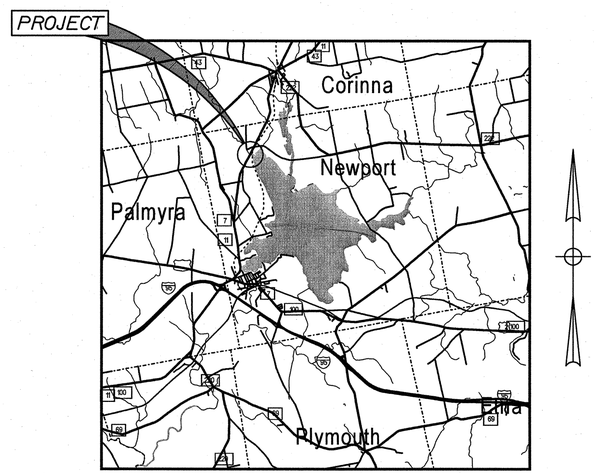


LOCATION MAP

2 0 2 4
Scale of Miles

## SCOPE OF WORK

Fabrication and delivery of Precast Concrete Box Culvert.

STATE OF MAINE
DEPARTMENT OF TRANSPORTATION

| APPROVED | DATE |
|---|---|
| COMMISSIONER: | 2/11/10 |
| CHIEF ENGINEER: | 2/11/10 |

STATE OF MAINE · Michael Henry Wight · 8089 · LICENSED · PROFESSIONAL ENGINEER

| | |
|---|---|
| SIGNATURE | 8089 |
| P.E. NUMBER | 27472 010 |
| DATE | |

PROJECT INFORMATION

| | |
|---|---|
| PROGRAM | BRIDGE |
| PROJECT MANAGER | DEVIN ANDERSON |
| DESIGNER | MICHAEL WIGHT |
| CONSULTANT | |
| PROJECT RESIDENT | |
| CONTRACTOR | |
| PROJECT COMPLETION DATE | |

PIN 16722.10

BH-1672(210)X

NEWPORT
MULLIGAN STREAM BRIDGE

TITLE SHEET

SHEET NUMBER
1
OF 2

Filename: \bridge\msta\001_PrebuyBox1.dgn Division: BRIDGE Username: brian.j.nichols Date: 2/4/2010

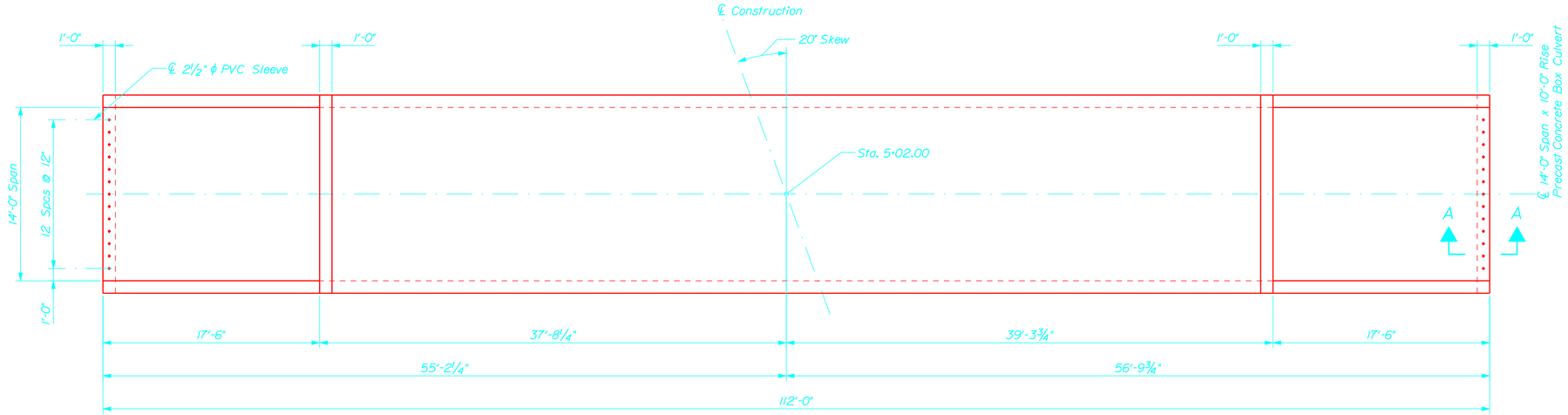


BOX CULVERT PLAN

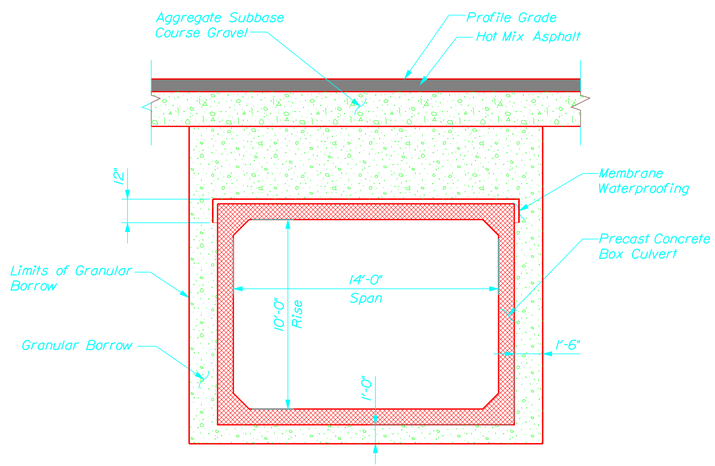


BOX CULVERT SECTION

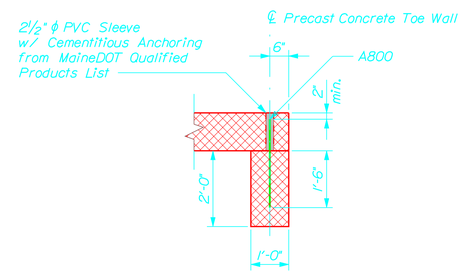


PRECAST CONCRETE TOE WALL DETAIL

Section "A-A"

## PRECAST CONCRETE ARCHES OR BOXES NOTES

1. The precast units shall be designed to carry construction loadings with a minimum fill cover of 6 inches over the top of the units.

2. The construction, handling, and assembly of the precast units shall be in accordance with Special Provisions Section 534, Precast Structural Concrete, and with the manufacturer's specifications as applicable.

3. Install standard membrane waterproofing over the top and to 12 inches down the exterior sides of the precast units.

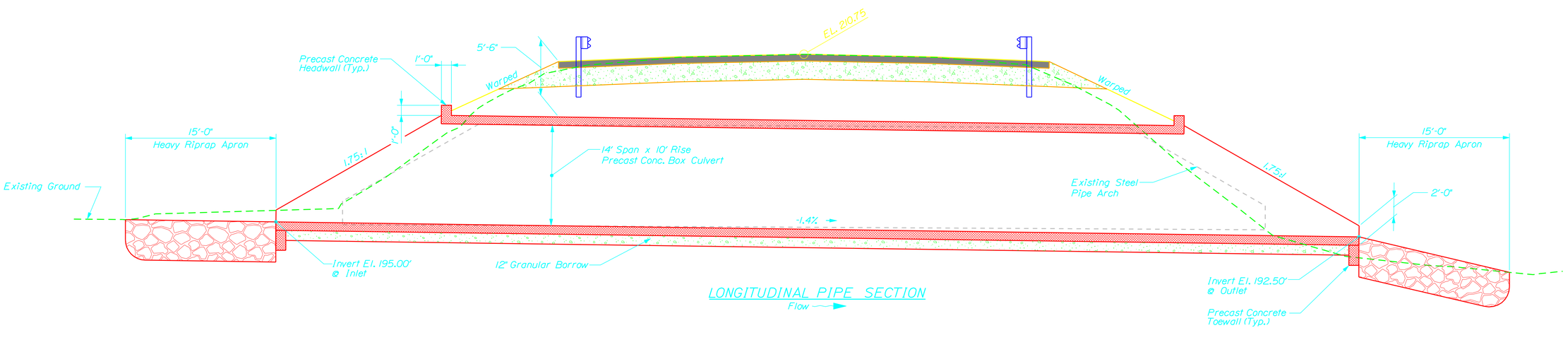


LONGITUDINAL PIPE SECTION

Flow

STATE OF MAINE
DEPARTMENT OF TRANSPORTATION

BH-1672(210)X

PIN 16722.10

BRIDGE PLANS

BRIDGE NO. 6103

| | BY | DATE |
|---|---|---|
| PROJ. MANAGER | | |
| DESIGN-DETAILED | MHM | DEC 2009 |
| CHECKED-REVIEWED | BJM | |
| DESIGN-DETAILED2 | | |
| DESIGN-DETAILED3 | | |
| REVISIONS 1 | | |
| REVISIONS 2 | | |
| REVISIONS 3 | | |
| REVISIONS 4 | | |
| F.E.D. CHANGE'S | | |

SIGNATURE

P.E. NUMBER

DATE

MULLIGAN STREAM BRIDGE
MULLIGAN STREAM
NEWPORT PENOBSCOT COUNTY

# BOX CULVERT DETAILS

SHEET NUMBER

2

OF 2

Filename: ...\BRIDGE\MSTA\002_PrebuyBox2.dgn Division: BRIDGE Username: michael.wight Date:2/11/2010

# STATE OF MAINE
# DEPARTMENT OF TRANSPORTATION

## SPECIFICATIONS

Design: Load and Resistance Factor Design per AASHTO LRFD Bridge Design Specifications, Fourth Edition 2007 and Interim Specifications through 2009.

## DESIGN LOADING

Live Load ..... HL93 Modified

## TRAFFIC DATA

| | |
|---|---|
| Current (2010) AADT | 160 |
| Future (2030) AADT | 210 |
| DHV - % of AADT | 14 |
| Design Hour Volume | 29 |
| Heavy Trucks (% of AADT) | 12 |
| Heavy Trucks (% of DHV) | 9 |
| Directional Distribution (% of DHV) | 53 |
| 18 kip Equivalent P 2.0 | 21 |
| 18 kip Equivalent P 2.5 | 20 |
| Design Speed (mph) | 45 |

## HYDROLOGIC DATA

| | |
|---|---|
| Drainage Area | 4.11 sq mi |
| Design Discharge (Q50) | 689.0 cfs |
| Check Discharge (Q100) | 812.6 cfs |
| Headwater Elevation (Q50) | 345.04 ft |
| Headwater Elevation (Q100) | 345.67 ft |
| Discharge Velocity (Q50) | 8.99 fps |
| Discharge Velocity (Q100) | 10.24 fps |
| Headwater Elevation (Q1.1) | 341.64 ft |
| Discharge Velocity (Q1.1) | 1.84 fps |
| Headwater Elevation (Q25) | 344.39 ft |

## MATERIALS

| | |
|---|---|
| Concrete: | |
| Precast | Class "P" |
| All Other | Class "A" |
| Reinforcing Steel | ASTM A 615/A 615M, Grade 60 |

## BASIC DESIGN STRESSES

| | |
|---|---|
| Concrete | f 'c = 4,350 psi |
| Precast Concrete | f 'c = 5,000 psi |
| Reinforcing Steel | f y = 60,000 psi |

## UTILITIES

Eastern Maine Electric Co-Op Inc.

## MAINTENANCE OF TRAFFIC

Close bridge to traffic for 21 days during August and detour traffic onto Route 2A and State Route 170. Total length of detour is 47.3 miles.

# PRENTISS TWP
# PENOBSCOT COUNTY
# LITTLE MUD BROOK BRIDGE
## OVER
# LITTLE MUD BROOK
## ROUTE 171
## PROJECT No. 16742.10
## PROJECT LENGTH 0.038 mi.
## BOX CULVERT FABRICATION & DELIVERY
## BRIDGE NO. 5707

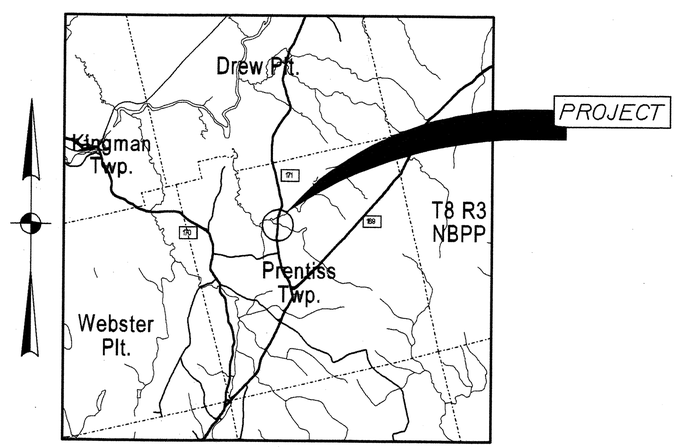


LOCATION MAP

2 0 2 4
Scale of Miles

## LIST OF DRAWINGS


Title Sheet ..... 1
Precast Concrete Box Details ..... 2


## SCOPE OF WORK

Fabrication and delivery of Precast Concrete Box Culvert

STATE OF MAINE
DEPARTMENT OF TRANSPORTATION

| | DATE |
|---|---|
| APPROVED | |
| COMMISSIONER: | 2/4/10 |
| CHIEF ENGINEER: | 2/4/10 |

STATE OF MAINE Robert B. Ellena 11421 Licensed PROFESSIONAL ENGINEER

| PROJECT INFORMATION | |
|---|---|
| PROGRAM | BRIDGE |
| PROJECT MANAGER | STEVE BODGE |
| DESIGNER | ROBERT ELLENA |
| CONSULTANT | |
| PROJECT RESIDENT | |
| CONTRACTOR | |
| PROJECT COMPLETION DATE | |

| | |
|---|---|
| SIGNATURE | |
| P.E. NUMBER | 11421 |
| DATE | 2/04/10 |

PIN 16742.10

PRENTISS TWP
LITTLE MUD BROOK BRIDGE

TITLE SHEET

16742.10

SHEET NUMBER
1
OF 2

Filename: \MSTA\001_Title_Precast_Box.dgn Division: BRIDGE Username: david.sullivan Date: 2/4/2010

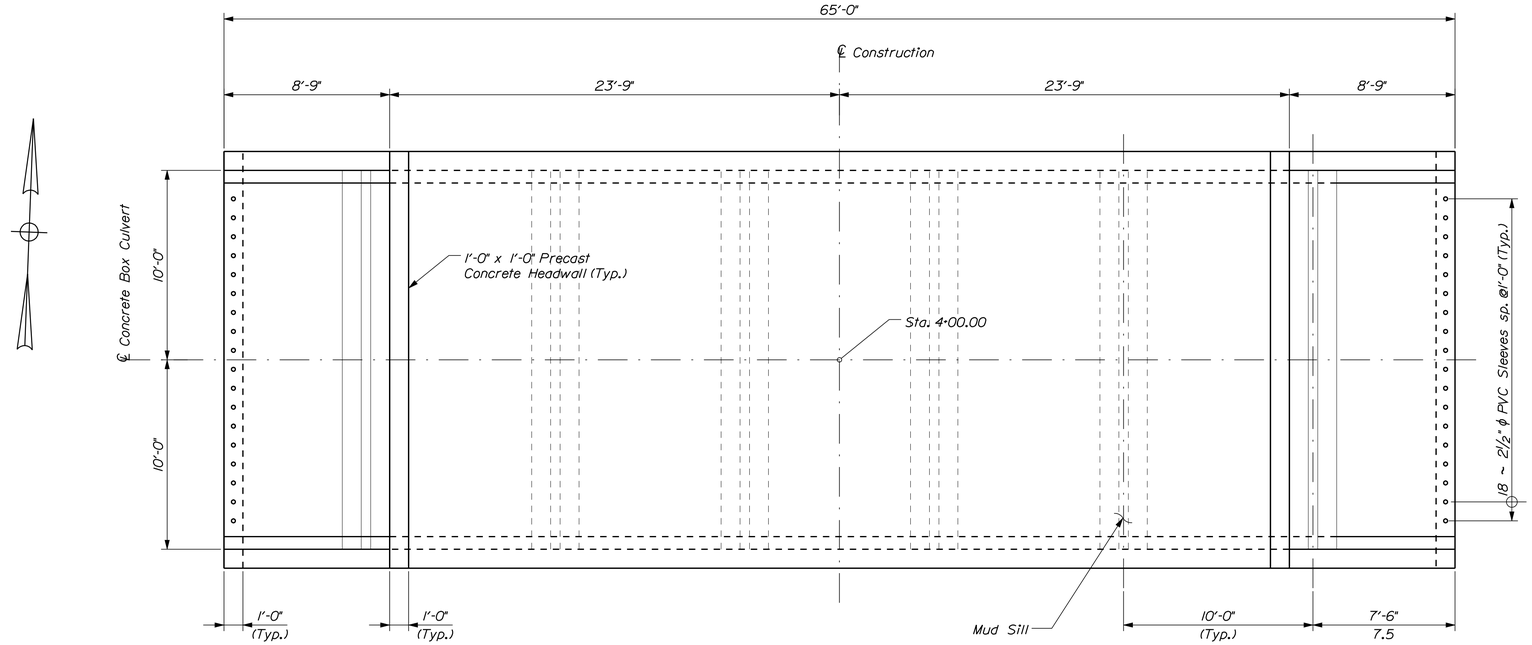


CONCRETE BOX PLAN

## PRECAST CONCRETE BOXES NOTES:

1. The precast units shall be designed to carry construction loadings with a minimum fill cover of 18 inches over the top of the units.

2. The construction, handling, and assembly of the precast units shall be in accordance with Special Provisions Section 534, Precast Structural Concrete, and with the manufacturer's specifications as applicable.

3. Install standard membrane waterproofing over the top and to 12 inches down the exterior sides of the precast units.

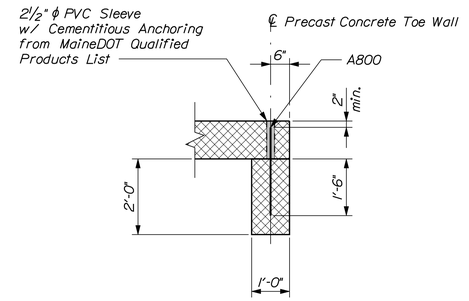


PRECAST CONCRETE TOE WALL DETAIL

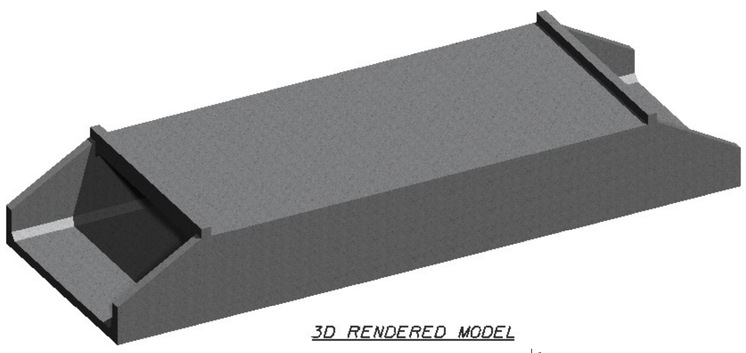

3D RENDERED MODEL

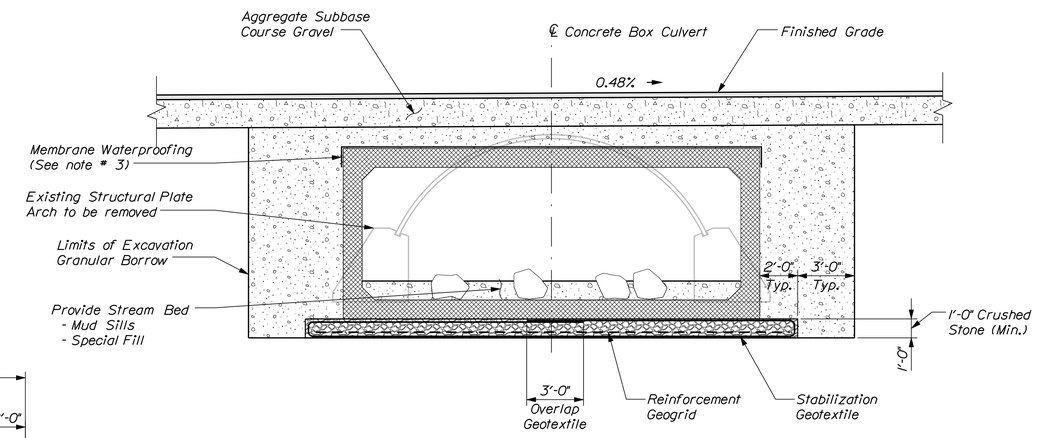


TYPICAL CONCRETE BOX SECTION

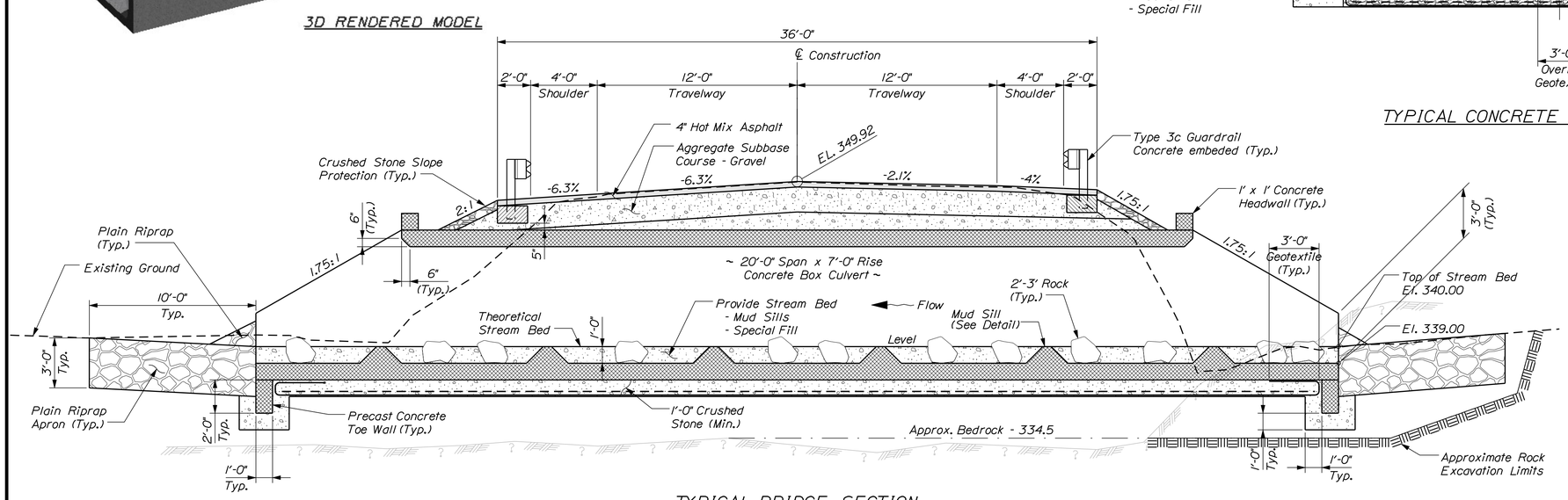


TYPICAL BRIDGE SECTION

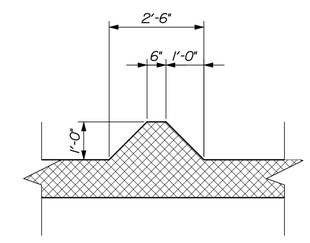


MUD SILL DETAIL

STATE OF MAINE
DEPARTMENT OF TRANSPORTATION

16742.10

PIN 16742.10

BRIDGE PLANS

BRIDGE NO. 5707

| PROJ. MANAGER | S. Bridge | BY | DATE |
|---|---|---|---|
| DESIGN-DETAILED | R. Ellena | DMS | 2/9/2010 |
| CHECKED-REVIEWED | ------ | ------ | ------ |
| DESIGN2-DETAILED2 | ------ | ------ | ------ |
| DESIGN3-DETAILED3 | ------ | ------ | ------ |
| REVISIONS 1 | ------ | ------ | ------ |
| REVISIONS 2 | ------ | ------ | ------ |
| REVISIONS 3 | ------ | ------ | ------ |
| REVISIONS 4 | ------ | ------ | ------ |
| FIELD CHANGES | ------ | ------ | ------ |

SIGNATURE

P.E. NUMBER

DATE

LITTLE MUD BROOK BRIDGE
LITTLE MUD BROOK
PRENTISS TWP PENOBSCOT COUNTY

PRECAST CONCRETE BOX DETAILS

SHEET NUMBER

2

OF 2

Filename: ...\msta\002_Box_Precast.dgn Division: BRIDGE Username: david.sullivan Date:2/3/2010

# STATE OF MAINE
# DEPARTMENT OF TRANSPORTATION

## SPECIFICATIONS

Design: Load and Resistance Factor Design per AASHTO LRFD Bridge Design Specifications, Fourth Edition 2007 and Interim Specifications through 2009.

## DESIGN LOADING

Live Load ..... HL - 93 Modified for STR I
(Truck only increased 25%)

## MATERIALS

Concrete:
Precast ..... Class "P"
Reinforcing Steel ..... ASTM A 615/A 615M, Grade 60
Welded Wire Fabric ..... ASTM A 185 (WWF), Grade 60

## BASIC DESIGN STRESSES

Precast Concrete ..... f 'c = 5,000 psi min.
Reinforcing Steel ..... f y = 60,000 psi
Welded Wire Fabric ..... f y = 60,000 psi

## TRAFFIC DATA

Current (2010) AADT ..... 1220
Future (2030) AADT ..... 1460
DHV - % of AADT ..... 11%
Design Hour Volume ..... 161
Heavy Trucks (% of AADT) ..... 25%
Heavy Trucks (% of DHV) ..... 20%
Directional Distribution (% of DHV) ..... 55%
18 kip Equivalent P 2.0 ..... 263
18 kip Equivalent P 2.5 ..... 251
Design Speed (mph) ..... 60

## HYDROLOGIC DATA

Drainage Area ..... 4.875 sq mi
Design Discharge (Q50) ..... 229.4 cfs
Check Discharge (Q100) ..... 264 cfs
Headwater Elevation (Q50) ..... 490.63 ft
Headwater Elevation (Q100) ..... 490.81 ft
Discharge Velocity (Q50) ..... 4.31 fps
Discharge Velocity (Q100) ..... 4.97 fps
Headwater Elevation (Q1.1) ..... 490.10 ft
Discharge Velocity (Q1.1) ..... 0.81 fps

## UTILITIES

Bangor Hydro Power Company
Northern New England Telephone Operations, LLC

## MAINTENANCE OF TRAFFIC

Close bridge to traffic for maximum of 5 ½ days and detour traffic on to state routes.

## LIST OF DRAWINGS


Title Sheet ..... 1
Precast Concrete Box Details ..... 2


# TWP18 ED BPP
# WASHINGTON COUNTY
# SOUTHERN INLET BRIDGE
## OVER
# SOUTHERN INLET

## PROJECT NO. 16758.10
## PROJECT LENGTH 0.095 mi.
## BOX CULVERT FABRICATION & DELIVERY
## BRIDGE NO. 5375

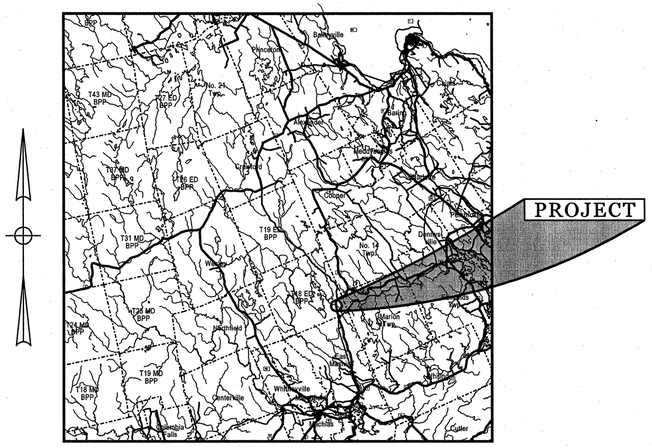


LOCATION MAP

2 0 2 4
Scale of Miles

## SCOPE OF WORK

Fabrication and delivery of Precast Concrete Box Culvert.

PIN 16758.10

STATE OF MAINE
DEPARTMENT OF TRANSPORTATION

| APPROVED | DATE |
|---|---|
| COMMISSIONER: | 2/11/10 |
| CHIEF ENGINEER: | 2/11/10 |

STATE OF MAINE ★ Michael Harry Wight 8089 ★ PROFESSIONAL ENGINEER

| | |
|---|---|
| SIGNATURE 8089 | |
| P.E. NUMBER 2/4/2010 | |
| DATE | |

PROJECT INFORMATION

| | |
|---|---|
| PROGRAM | BRIDGE |
| PROJECT MANAGER | S. BUDGE |
| DESIGNER | M. WIGHT |
| CONSULTANT | |
| PROJECT RESIDENT | |
| CONTRACTOR | |
| PROJECT COMPLETION DATE | |

TWP18 ED EPP
SOUTHERN INLET BRIDGE

TITLE SHEET

SHEET NUMBER
1
OF 2

Filename:\00\BRIDGE\MST\A\001_Title.dgn Division: BRIDGE Username: richard.nimon Date:2/4/2010

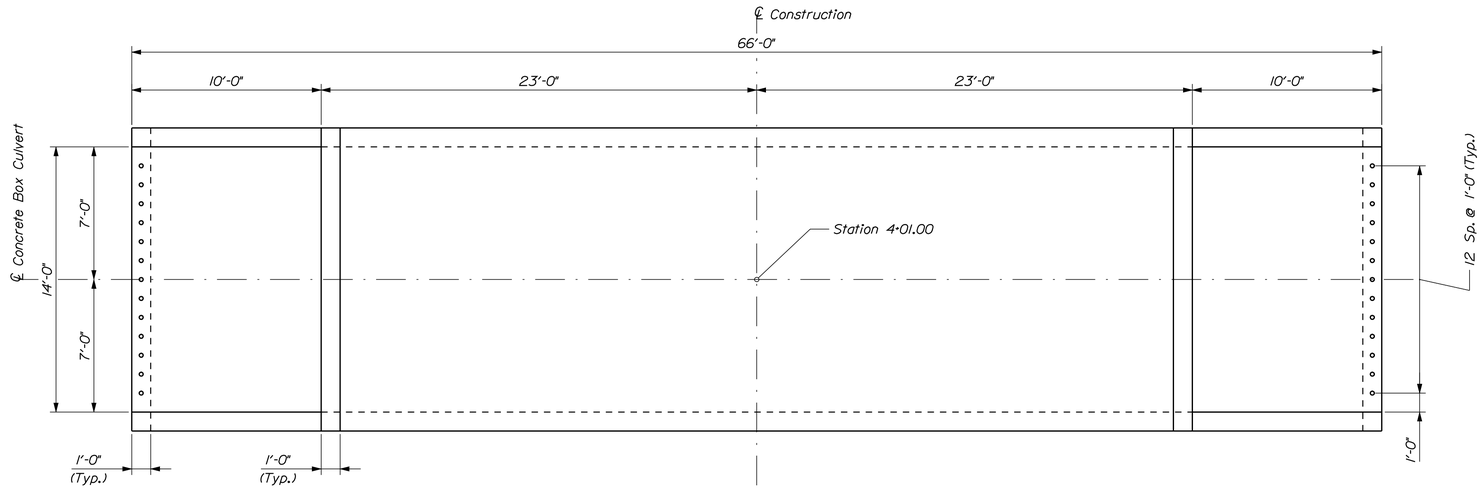


CONCRETE BOX PLAN

## PRECAST CONCRETE ARCHES OR BOXES NOTES

1. The precast units shall be designed to carry construction loadings with a minimum fill cover of 18 inches over the top of the units.

2. The construction, handling, and assembly of the precast units shall be in accordance with Special Provisions Section 534, Precast Structural Concrete, and with the manufacturer's specifications as applicable.

3. Install standard membrane waterproofing over the top and to 12 inches down the exterior sides of the precast units.

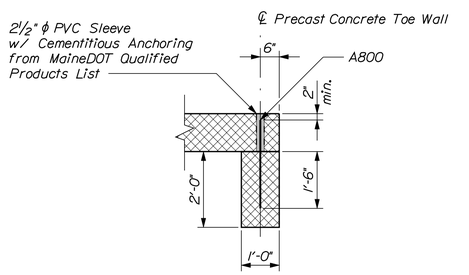


PRECAST CONCRETE TOE WALL DETAIL

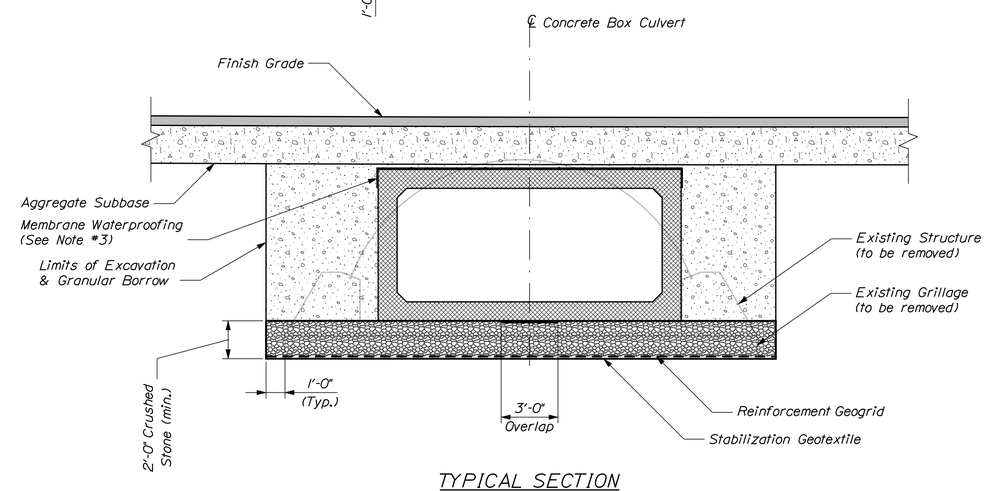


TYPICAL SECTION

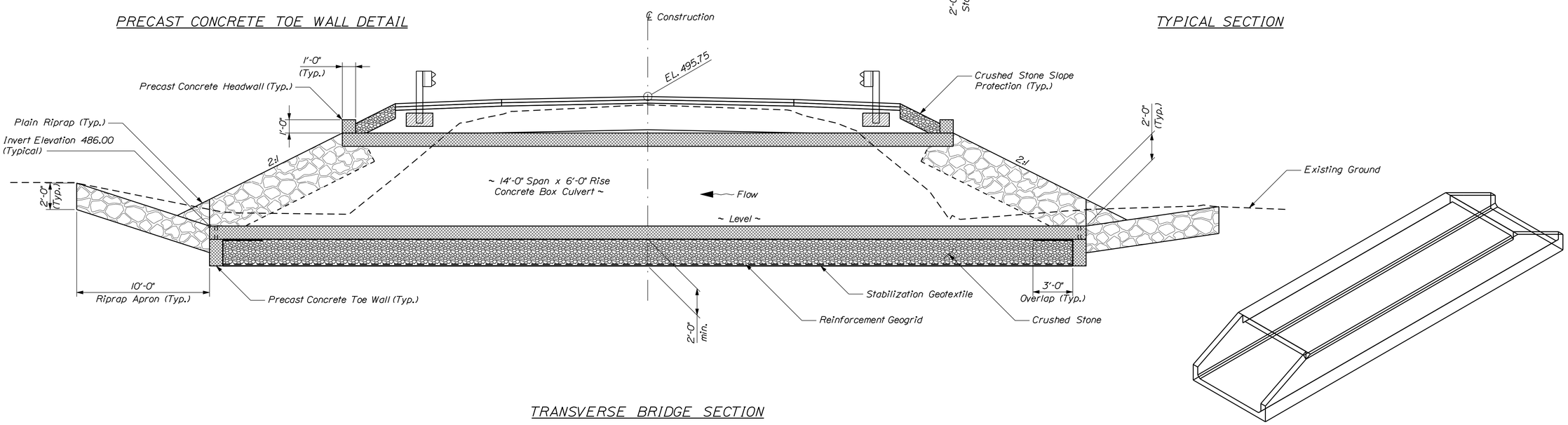


TRANSVERSE BRIDGE SECTION

STATE OF MAINE
DEPARTMENT OF TRANSPORTATION

16758.10

PIN 16758.10

BRIDGE NO. 5375

BRIDGE PLANS

| | | | |
|---|---|---|---|
| PROJ. MANAGER | S. BODGE | BY | DATE |
| DESIGN-DETAILED | M. WIGHT | R.NIMON | 1/2010 |
| CHECKED-REVIEWED | | | |
| DESIGN2-DETAILED2 | | | |
| DESIGN3-DETAILED3 | | | |
| REVISIONS 1 | | | |
| REVISIONS 2 | | | |
| REVISIONS 3 | | | |
| REVISIONS 4 | | | |
| FIELD CHANGES | | | |

SIGNATURE

P.E. NUMBER

DATE

SOUTHERN INLET BRIDGE
SOUTHERN INLET
TWP18 ED EPP WASHINGTON COUNTY

PRECAST CONCRETE BOX DETAILS

SHEET NUMBER

2

OF 2

Filename: ...\msla\012_Precast_Box.dgn Division: BRIDGE Username: richard.nimon Date:2/4/2010