STATE OF MAINE
DEPARTMENT OF TRANSPORTATION

TRAFFIC DATA

Current (2010) AADT	950
Future (2030) AADT	1330
DHV - % of AADT	10
Design Hour Volume	133
Heavy Trucks (% of AADT)	31
Heavy Trucks (% of DHV)	24
Directional Distribution (% of DHV)	57
18 kip Equivalent P 2.0	545
18 kip Equivalent P 2.5	519
Design Speed (mph)	45

HYDROLOGIC DATA

Drainage Area	4.415 sq mi
Design Discharge (Q50)	676.6 cfs
Check Discharge (Q100)	796.3 cfs
Headwater Elevation (Q50)	497.89 ft
Headwater Elevation (Q100)	499.24 ft
Discharge Velocity (Q50)	11.046 fps
Discharge Velocity (Q100)	11.452 fps
Headwater Elevation (Q1.1)	490.73 ft
Discharge Velocity (Q1.1)	6.292 fps

UTILITIES

Bangor Hydro-Electric Compay
Northern New England Telephone Operations, LLC

MAINTENANCE OF TRAFFIC

See Special Provision

CHARLESTON
PENOBSCOT
RICHARDS BRIDGE
OVER
RICHARDS BROOK
BRADFORD RD.
STATE PROJECT 16693.00

CULVERT REHABILITATION (SLIPLINING)
BRIDGE NO. 3972

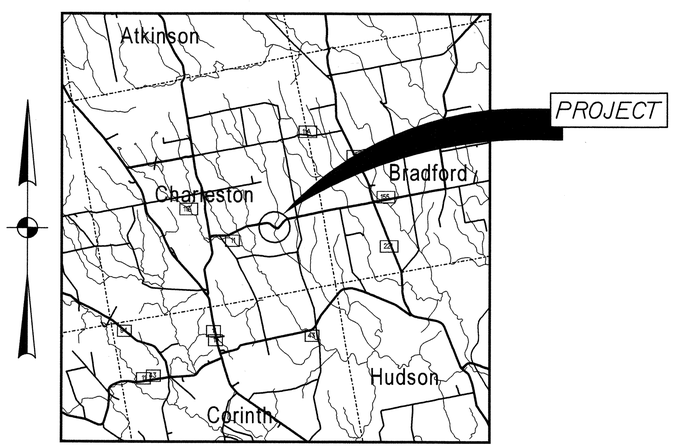

LOCATION MAP

2 0 2 4
Scale of Miles

LIST OF DRAWINGS

Title Sheet	1
Estimated Quantities, Notes & General Plan	2
Cross Sections	3-6
Pipe Details	7
Right Of Way Map	8

SCOPE OF WORK

1. Sliplining of existing structure with new 9'-0" dia. Aluminum Pipe
2. Place annular space grouting
3. Remove existing pavement as shown on plans, replace with new
4. Rebuild shoulder and install new guardrail along inside of curve as shown on plans
5. Install riprap protection at ends and along upstream side slopes
6. Replace end treatments and rebuild gravel shoulders

STATE OF MAINE
DEPARTMENT OF TRANSPORTATION
APPROVED
COMMISSIONER: DATE 7/27/10
CHIEF ENGINEER: DATE 3/23/10

STATE OF MAINE PROFESSIONAL ENGINEER Michael Henry Wight 8089 LICENSED

SIGNATURE 8089
P.E. NUMBER
DATE 3/22/2010

PROJECT INFORMATION

PROGRAM	BRIDGE
PROJECT MANAGER	STEVE BODGE
DESIGNER	DAVID SULLIVAN
CONSULTANT	
PROJECT RESIDENT	
CONTRACTOR	
PROJECT COMPLETION DATE	

PIN 16693.00

CHARLESTON
RICHARDS BRIDGE

TITLE SHEET

16693.00

SHEET NUMBER
1
OF 8

Filename:\00\BRIDGE\MSTA\001_Title.dgn Division: BRIDGE Username: david.sullivan Date:3/22/2010

GENERAL CONSTRUCTION NOTES

1. Riprap adjacent to the pipe shall be carefully placed so as not to damage the pipe and so that the finished slope will match the ends of the pipe. Any extra labor, material, or equipment used will be considered incidental to Item 610.08, Plain Riprap.

2. The Contractor is responsible for assuring that the pipe does not "Float" during the grouting operation. The cost to restrain the pipe will be incidental to Item 509.202, Culvert Sliplining.

3. The Contractor shall make field measurements before fabrication to insure that the pipe will fit. Tree removal shall be Incidental to Pay Item 509.202 Culvert Sliplinning.

4. For easements, construction limits and right of way lines, refer to Right of Way Map.

5. The clearing limits as shown on the plans are approximate. The exact limits will be established in the field by the Resident. Payment for clearing will be considered incidental to Contract items.

6. Do not excavate for Aggregate Subbase Course where existing material is suitable as determined by the Resident.

7. In areas where the Resident directs the Contractor not to excavate to the subgrade line shown on the plans, payment for removing existing pavement, grubbing, shaping, ditching, and compacting the existing subbase and layers of new subbase 6 inches or less thick will be made under appropriate equipment rental items.

8. All embankment material, except as otherwise shown, placed below EL. 490.00 shall be Granular Borrow meeting the requirements of Subsection 703.19, Material for Underwater Backfill.

9. Place riprap on upstream sideslopes up to EL. 495.00 and downstream sideslopes up to EL. 499.00.

10. Stones which cannot be rolled or compacted into the surface of the shoulder shall be removed by hand raking. Payment for hand raking will be considered incidental to Item No. 304.10, Aggregate Subbase Course - Gravel.

11. Erosion Control Mix shall be used in those areas normally receiving loam and seed as directed by the Resident. Placement shall be in accordance with Standard Specifications Section 619, Mulch. Payment will be made under Item No. 619.1401, Erosion Control Mix.

12. An NCHRP350 compliant guardrail end treatment shall be installed concurrently with the placement of each section of beam guardrail.

13. Extended-use Erosion Control Blanket, seeded gutters, riprap downspouts, and other gutters lined with Stone Ditch Protection shall be constructed after paving and shoulder work is completed, where it is apparent that runoff will cause continual erosion. Payment will be made under the appropriate Contract items.

14 Project information referred to below may be accessed at the following MaineDOT web address: http://www.maine.gov/mdot/comprehensive-list-projects/project-information.php.

15 The existing bridge plans may be accessed at the MaineDOT web address. The plans are reproductions of the original drawings as prepared for the construction of the bridge. It is very unlikely that the plans will show any construction field changes or any alterations which may have been made to the bridge during its life span.

16 Quantities included for pay items measured and paid for by Lump Sum are estimated quantities and are provided by MaineDOT for informational purposes only. Lump Sum pay items will be paid for at the Contract Bid amount, with no addition or reduction in payment to the Contractor if the actual final quantities are different from the MaineDOT provided estimated quantities, except as follows:

a. If a Lump Sum pay item is eliminated, the requirements of Standard Specifications Section 109.2, Elimination of Items, will take precedence.

b. If other Contract Documents specifically allow a change in payment for a Lump Sum pay item, those requirements will be followed.

c. If a design change results in changes to estimated quantities for Lump Sum pay items, price adjustments will be made in accordance with Standard Specifications Section 109.7, Equitable Adjustments to Compensation.

17 All materials and labor needed to reconstruct the gravel shoulder shall be paid for under Item No. 205.51, Widening of Existing Shoulder. Existing material in shoulders shall be inspected and approved by the Resident before additional material is added.

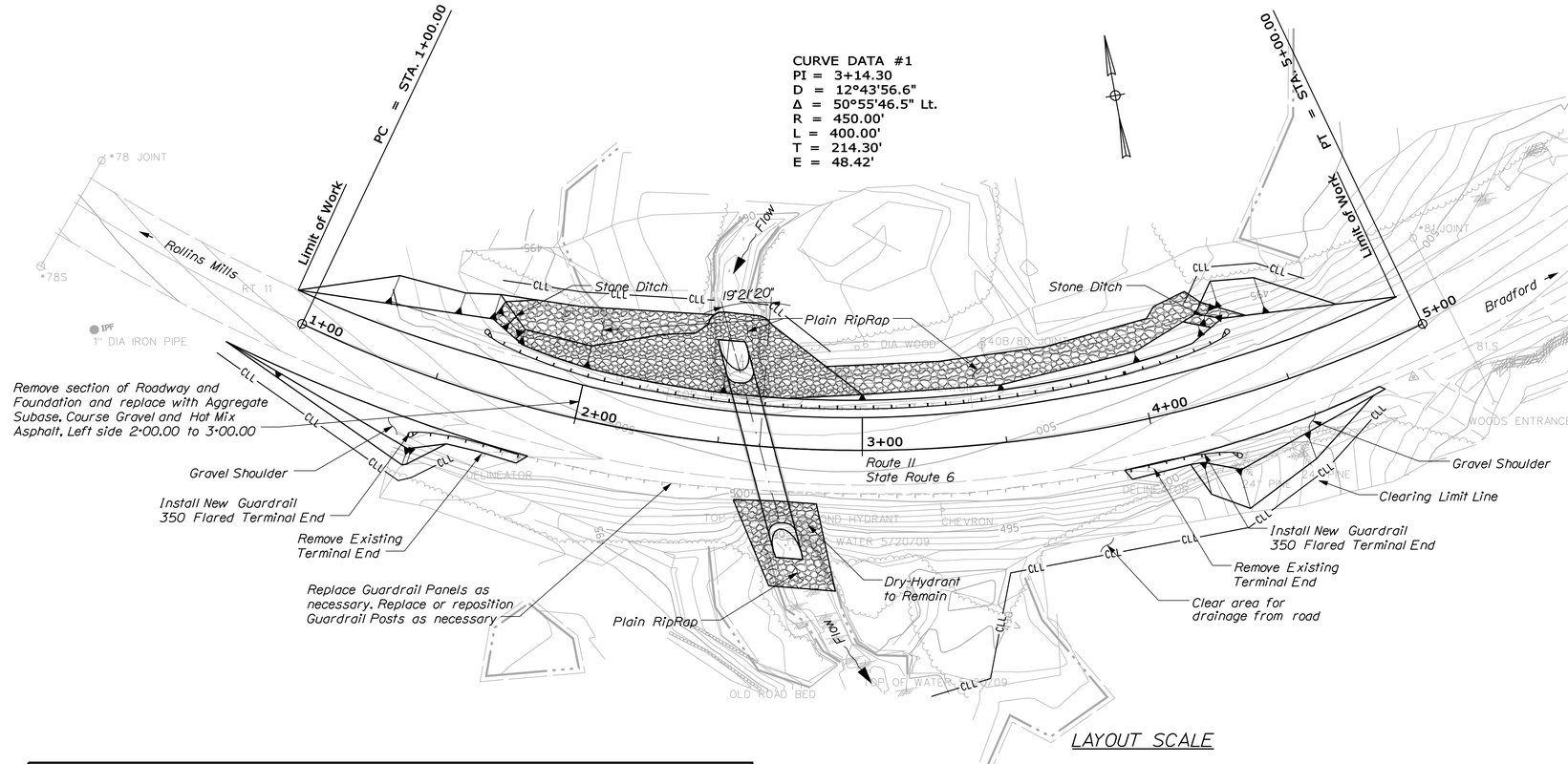

PLAN

LAYOUT SCALE

25 0 25 50

Scale of Feet

ESTIMATED QUANTITIES			
ITEM NO.	DESCRIPTION	QUANTITY	UNIT
202.127	REMOVE EXISTING BITUMINOUS PAVEMENT (126 SY)	1	LS
203.20	COMMON EXCAVATION	240	CY
203.24	COMMON BORROW	59	CY
205.51	WIDENING OF EXISTING SHOULDER - PLAN QUANTITY	129	SY
304.10	AGGREGATE SUBBASE COURSE - GRAVEL	210	CY
403.207	HOT MIX ASPHALT, 19.0 mm, NOMINAL MAXIMUM SIZE	20	T
403.208	HOT MIX ASPHALT, 12.5 mm, NOMINAL MAXIMUM SIZE, SURFACE	13	T
409.15	BITUMINOUS TACK COATING	18	G
502.57	ANNULAR SPACE GROUTING	56	CY
509.202	CULVERT SLIPLINING	1	LS
511.07	COFFERDAM: UPSTREAM	1	LS
511.07	COFFERDAM: DOWNSTREAM	1	LS
526.30	TEMPORARY CONCRETE BARRIER - TYPE 1	50	LF
606.178	GUARDRAIL BEAM	175	LF
606.23	GUARDRAIL TYPE 3C - SINGLE RAIL	187.5	LF
606.353	REFLECTORIZED FLEXIBLE GUARDRAIL MARKER	8	EA
606.367	REPLACE UNUSABLE EXISTING GUARDRAIL POSTS	17	EA
606.754	WIDEN SHOULDER FOR GUARDRAIL 350 FLARED TERMINAL	4	EA
606.79	GUARDRAIL 350 FLARED TERMINAL	4	EA
610.08	PLAIN RIPRAP	537	CY
610.18	STONE DITCH PROTECTION	11	CY
619.1401	EROSION CONTROL MIX	29	CY
620.58	EROSION CONTROL GEOTEXTILE	861	SY
627.733	4 INCH WHITE OR YELLOW PAINTED PAVE MRK LINE	676	LF
629.05	HAND LABOR, STRAIGHT TIME	10	HR
631.12	ALL PURPOSE EXCAVATOR (INCLUDING OPERATOR)	10	HR
631.13	BULLDOZER (INCLUDING OPERATOR)	10	HR
631.172	TRUCK - LARGE (INCLUDING OPERATOR)	20	HR
631.18	CHAIN SAW RENTAL (INCLUDING OPERATOR)	10	HR
639.19	FIELD OFFICE TYPE B	1	EA
652.312	TYPE III BARRICADE	4	EA
652.33	DRUM	20	EA
652.34	CONE	40	EA
652.35	CONSTRUCTION SIGNS	66	SF
652.36	MAINTENANCE OF TRAFFIC CONTROL DEVICES	60	CD
652.38	FLAGGER	320	HR
656.75	TEMPORARY SOIL EROSION AND WATER POLLUTION CONTROL	1	LS
659.10	MOBILIZATION	1	LS

STATE OF MAINE
DEPARTMENT OF TRANSPORTATION

16693.00

PIN 16693.00

BRIDGE PLANS

BRIDGE NO. 3972

PROJ. MANAGER	Steve Bodge	BY	DATE
DESIGN-DETAILED	DMS	DMS	3-11-10
CHECKED-REVIEWED	GFH	MHW	
DESIGN2-DETAILED2			
DESIGN3-DETAILED3			
REVISIONS 1			
REVISIONS 2			
REVISIONS 3			
REVISIONS 4			
FIELD CHANGES			

SIGNATURE

P.E. NUMBER

DATE

RICHARDS BRIDGE
RICHARDS BROOK
CHARLESTON PENOBSCOT

ESTIMATED QUANTITIES, NOTES AND GENERAL PLAN

SHEET NUMBER

2

OF 8

Filename: ...\00\BRIDGE\MSTA\002_BDPlan1.dgn Division: BRIDGE Username: david.sullivan Date:4/5/2010

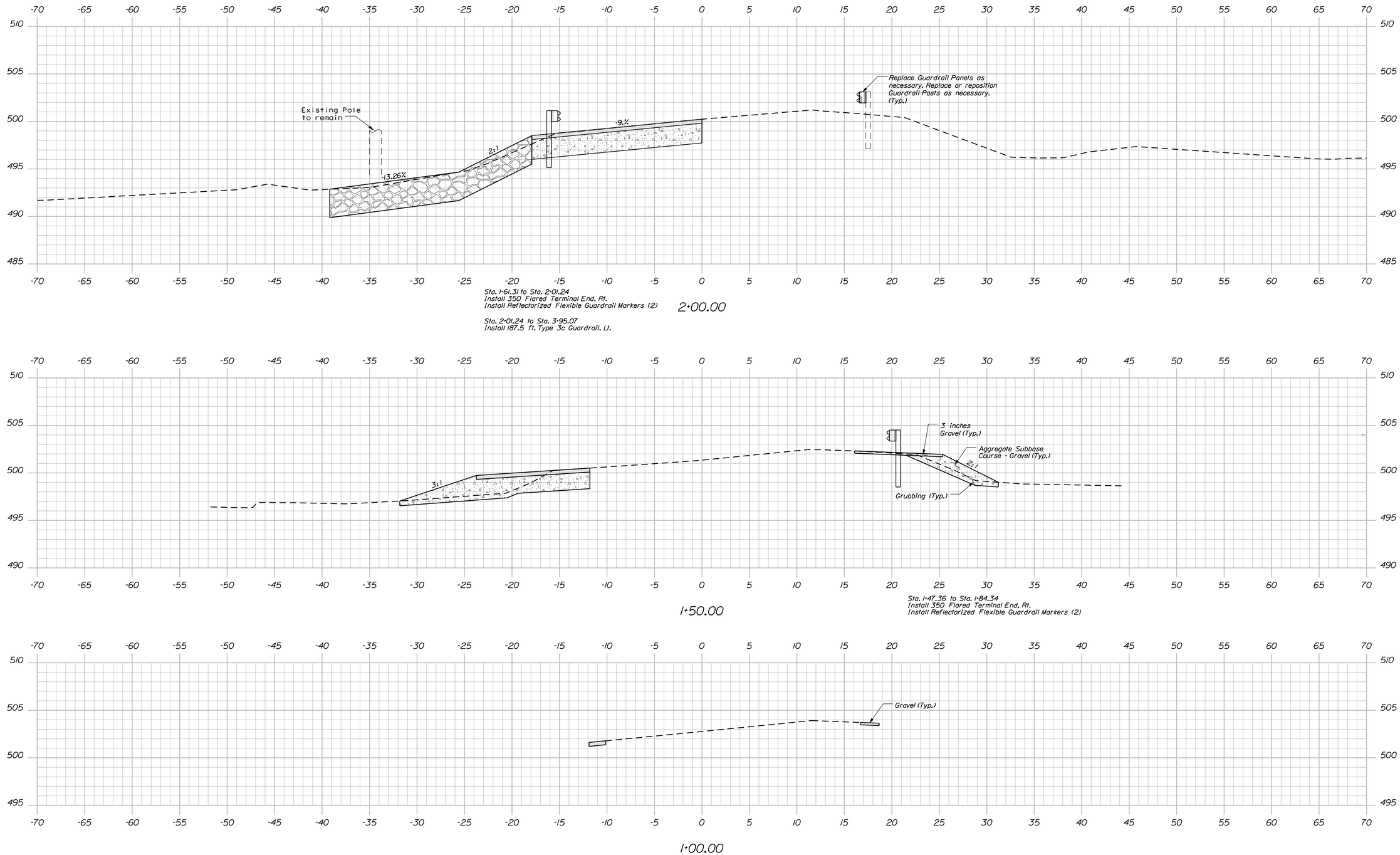

STATE OF MAINE
DEPARTMENT OF TRANSPORTATION

16693.00

PIN 16693.00

BRIDGE NO. 3972

BRIDGE PLANS

PROJ. MANAGER	Steve Bodge		
DESIGN-DETAILED	DMS	DMS	3-11-10
CHECKED-REVIEWED	GFH	MHW	
DESIGN2-DETAILED2			
DESIGN3-DETAILED3			
REVISIONS 1			
REVISIONS 2			
REVISIONS 3			
REVISIONS 4			
FIELD CHANGES			

SIGNATURE

P.E. NUMBER

DATE

RICHARDS BRIDGE
RICHARDS BROOK
CHARLESTON PENOBSCOT

CROSS SECTIONS

SHEET NUMBER
3
OF 8

Sta. 1+00.00 to Sta. 2+00.00

Filename: ...\msta\003_XSECT_1+00_001.dgn Division: BRIDGE Username: david.sullivan Date:3/22/2010

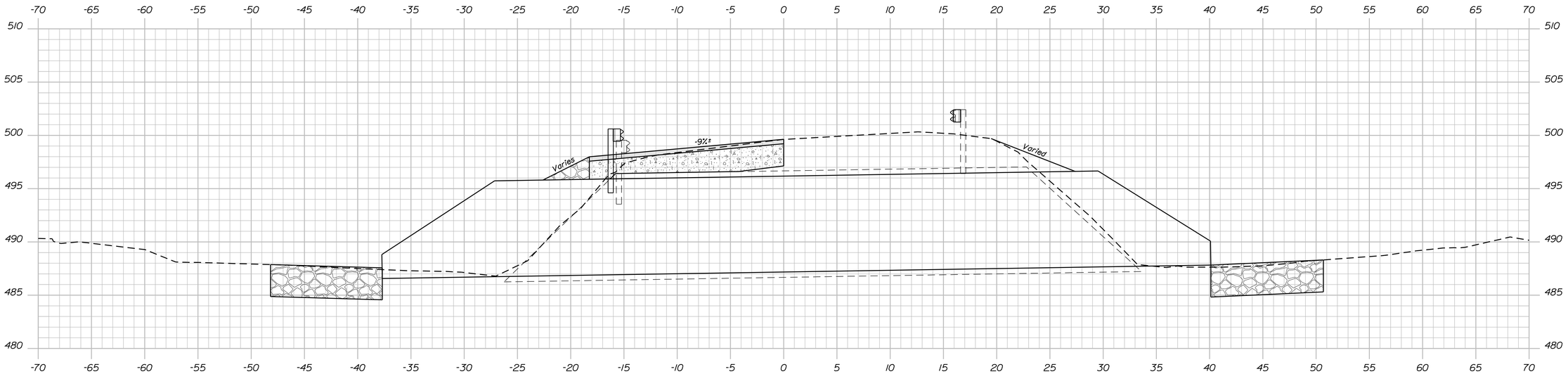

2+64.50 Skew 19° Behind on Left

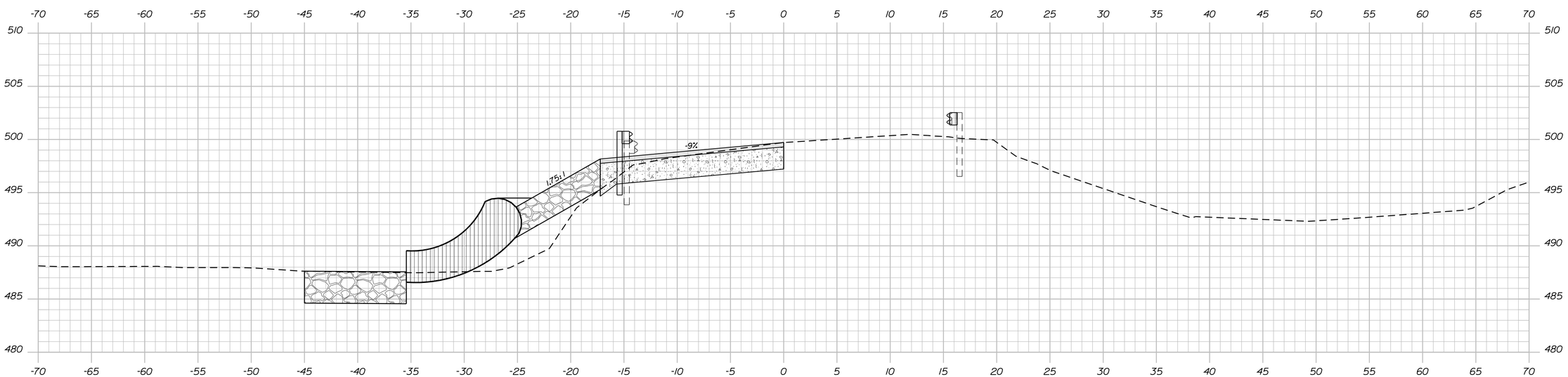

2+50.00

STATE OF MAINE
DEPARTMENT OF TRANSPORTATION

16693.00

PIN 16693.00

BRIDGE NO. 3972

BRIDGE PLANS

		BY	DATE
PROJ. MANAGER	Steve Bodge		
DESIGN-DETAILED	DMS	DMS	3-11-10
CHECKED-REVIEWED	GFH	MHW	
DESIGN2-DETAILED2			
DESIGN3-DETAILED3			
REVISIONS 1			
REVISIONS 2			
REVISIONS 3			
REVISIONS 4			
FIELD CHANGES			

SIGNATURE

P.E. NUMBER

DATE

RICHARDS BRIDGE
RICHARDS BROOK
CHARLESTON PENOBSCOT

CROSS SECTIONS

SHEET NUMBER

4

OF 8

Sta. 2+50.00 to Sta. 2+64.50

Filename: ...\msta\004_XSECT_2+50_002.dgn Division: BRIDGE Username: david.sullivan Date:3/22/2010

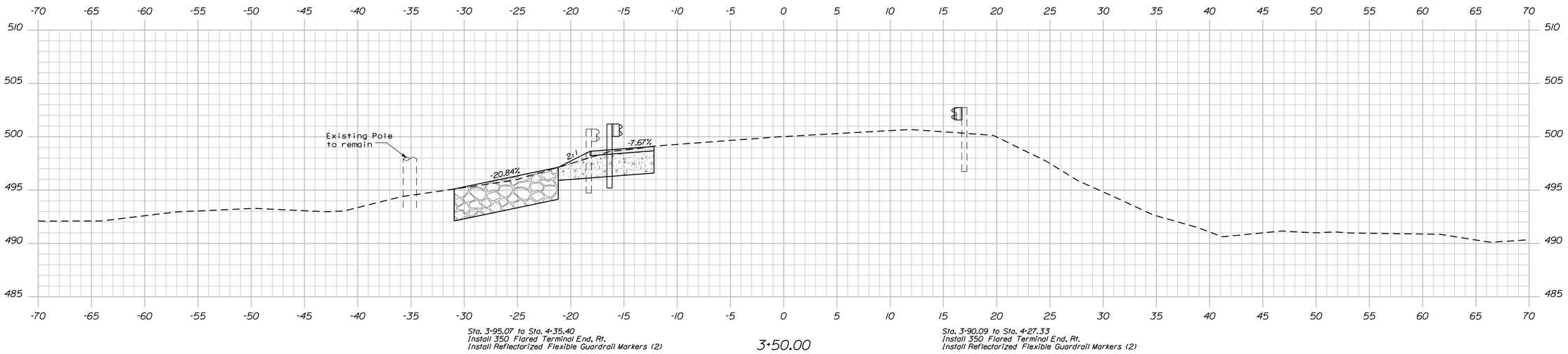

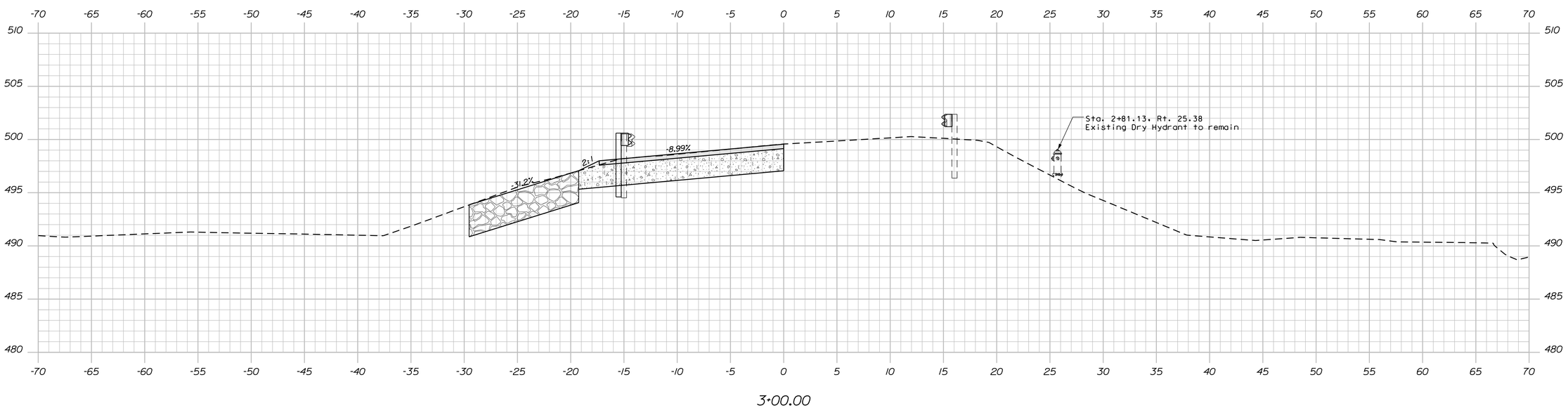

Sta. 3+00.00 to Sta. 3+50.00

STATE OF MAINE
DEPARTMENT OF TRANSPORTATION

16693.00

PIN
16693.00

BRIDGE NO. 3972

BRIDGE PLANS

		BY	DATE
PROJ. MANAGER	Steve Bodge		
DESIGN-DETAILED	DMS	DMS	3-11-10
CHECKED-REVIEWED	GFH	MHW	
DESIGN2-DETAILED2			
DESIGN3-DETAILED3			
REVISIONS 1			
REVISIONS 2			
REVISIONS 3			
REVISIONS 4			
FIELD CHANGES			

SIGNATURE

P.E. NUMBER

DATE

RICHARDS BRIDGE
RICHARDS BROOK
CHARLESTON PENOBSCOT

CROSS SECTIONS

SHEET NUMBER
5
OF 8

Filename: ...\msta\005_XSECT_3+00_003.dgn Division: BRIDGE Username: david.sullivan Date:3/22/2010

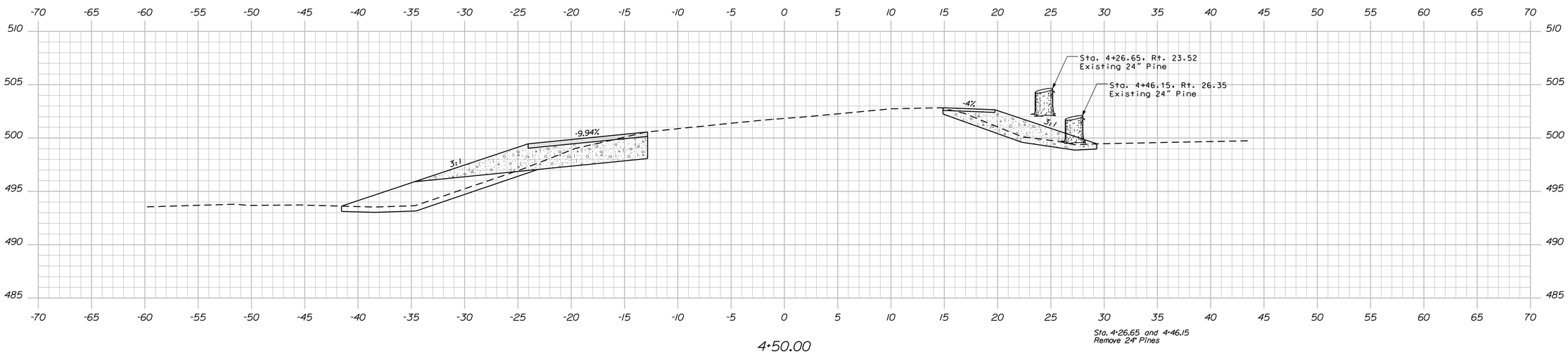

4+50.00

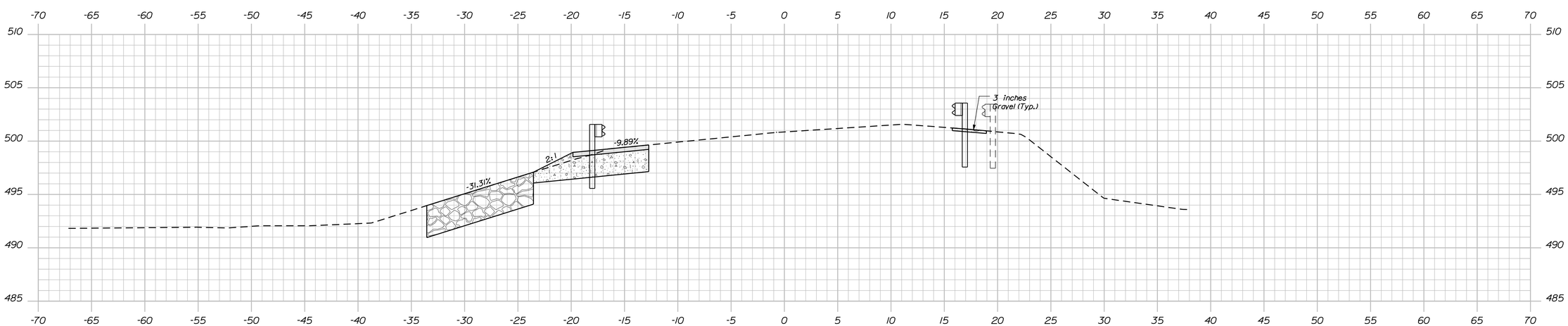

4+00.00

Filename: ...\msta\006_XSECT_4+00_004.dgn Division: BRIDGE Username: david.sullivan Date:3/22/2010

STATE OF MAINE
DEPARTMENT OF TRANSPORTATION

16693.00

PIN
16693.00

BRIDGE NO. 3972 BRIDGE PLANS

		BY	DATE
PROJ. MANAGER	Steve Bodge		
DESIGN-DETAILED	DMS	DMS	3-11-10
CHECKED-REVIEWED	GFH	MHW	
DESIGN2-DETAILED2			
DESIGN3-DETAILED3			
REVISIONS 1			
REVISIONS 2			
REVISIONS 3			
REVISIONS 4			
FIELD CHANGES			

SIGNATURE

P.E. NUMBER

DATE

RICHARDS BRIDGE
RICHARDS BROOK
CHARLESTON PENOBSCOT

CROSS SECTIONS

SHEET NUMBER

6

OF 8

Sta. 4+00.00 to Sta. 4+50.00

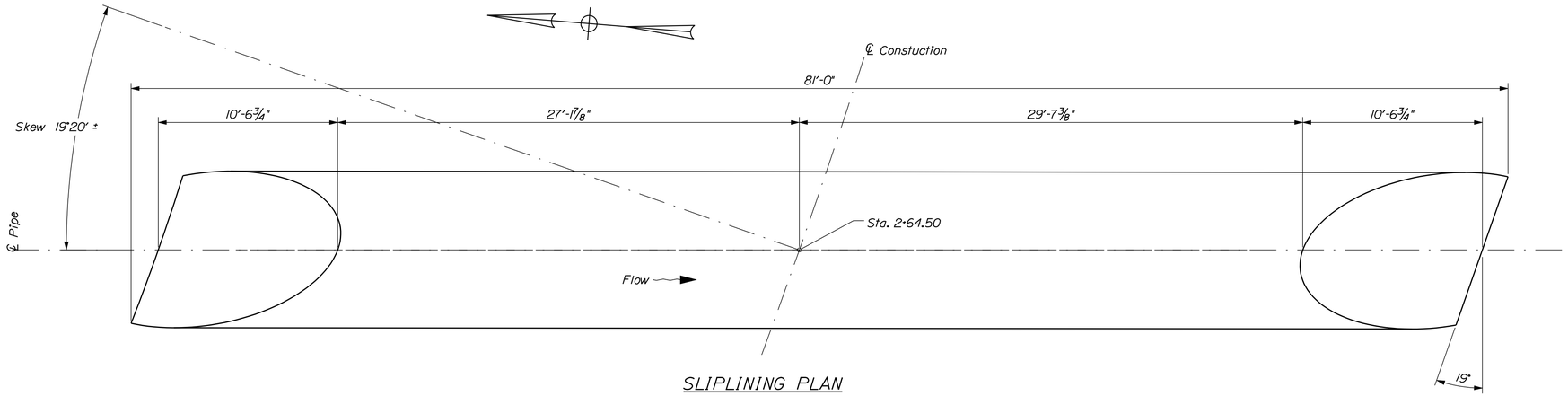

SLIPLINING PLAN

Structural Plate Pipe Notes

1. One 9'-0" ϕ Aluminum Structural Plate Pipe required. The plates shall be 0.200" thick.
2. The estimated weight of the pipe is 9.963 lbs.
3. The aluminum nuts are to be fillet welded to the pipe such that the hole through the pipe is smaller than the outside diameter of the nut.
4. Guide rails shall be a metal with similar composition to the aluminum pipe to prevent galvanic action.
5. End Reinforcement devices shall be of aluminum and shall be of sufficient strength to provide a minimum section modulus, about an axis perpendicular to the center of the pipe of 1.10 in.³ per foot of pipe circumference. Maximum spacing of the devices shall be 5'-6". Attachment to the pipe shall be with ¾" ϕ aluminum bolts. Section properties and details of the device and the method of attachment shall be submitted to the Resident for approval.

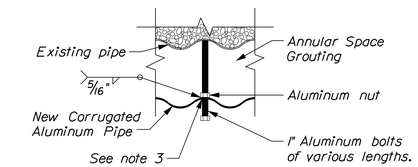

BRACING BOLT DETAIL

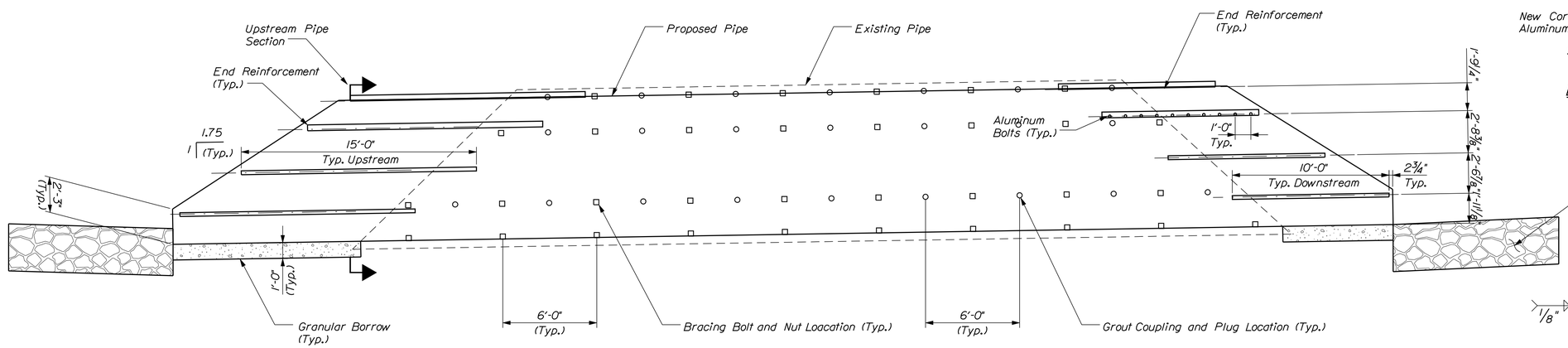

GROUT NIPPLE AND BRACING BOLT LAYOUT

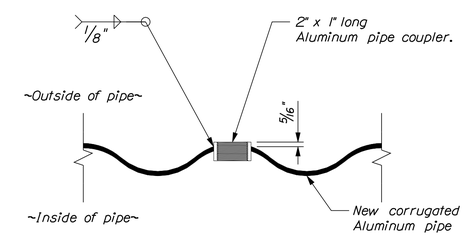

GROUT NIPPLE DETAIL

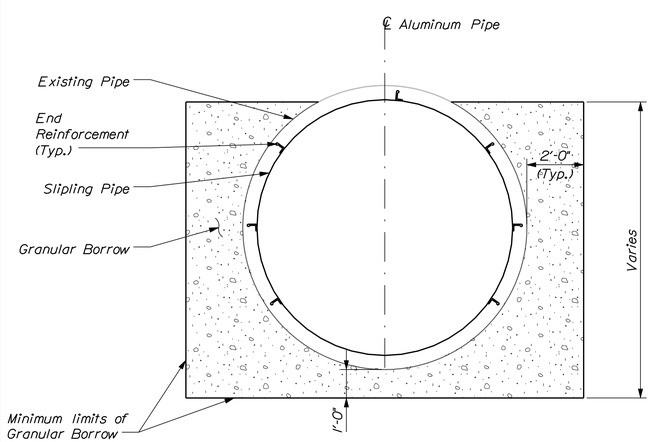

UPSTREAM PIPE SECTION

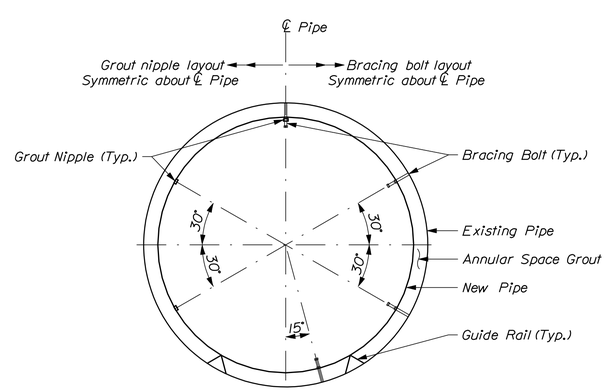

PIPE CROSS SECTION

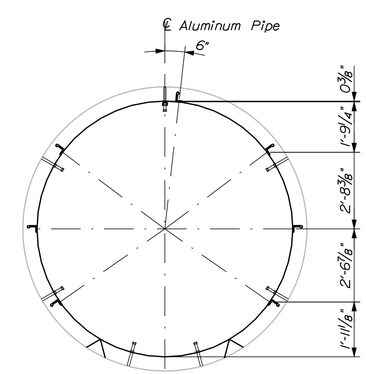

END REINFORCEMENT OF ALUMINUM PIPE SECTION

STATE OF MAINE
DEPARTMENT OF TRANSPORTATION

16693.00

PIN 16693.00

BRIDGE NO. 3972

BRIDGE PLANS

	BY	DATE
PROJ. MANAGER	Steve Bodge	
DESIGN-DETAILED	DMS	3-11-10
CHECKED-REVIEWED	GFH	MHW
DESIGN2-DETAILED2		
DESIGN3-DETAILED3		
REVISIONS 1		
REVISIONS 2		
REVISIONS 3		
REVISIONS 4		
FIELD CHANGES		

SIGNATURE

P.E. NUMBER

DATE

RICHARDS BRIDGE
RICHARDS BROOK
CHARLESTON PENOBSCOT

PIPE DETAILS

SHEET NUMBER

7

OF 8

Filename: ...\msta\007_Pipe_Details.dgn Division: BRIDGE Username: david.sullivan Date:3/22/2010

BETTYLYNN TRUSZ
RICHARD D. TRUSZ
PARCEL NO. (1)
LAND TAKEN = 0.08± AC. (1) (PRESC. EASE.)
LAND TAKEN = 0.13± AC. (1) (OTHER)
TOTAL LAND TAKEN = 0.21± AC. (2)
TEMP. CONST. RIGHTS = 0.16± AC. (1)
TOTAL AREA = 55± AC. (PER TOWN)
REM. AREA = 54.79± AC.

CURVE DATA #1
PI = 3+14.30
D = 12°43'56.6"
Δ = 50°55'46.5" Lt.
R = 450.00'
L = 400.00'
T = 214.30'
E = 48.42'

LINDA CORO
PARCEL NO. (3)
LAND TAKEN = 0.09± AC. (1) (PRESC. EASE.)
LAND TAKEN = 0.13± AC. (1) (OTHER)
TOTAL LAND TAKEN = 0.22± AC. (2)
TEMP. CONST. RIGHTS = 0.05± AC. (1)
TOTAL AREA = 4.81± AC. (PER SURVEY PLAN)
REM. AREA = 4.59± AC.

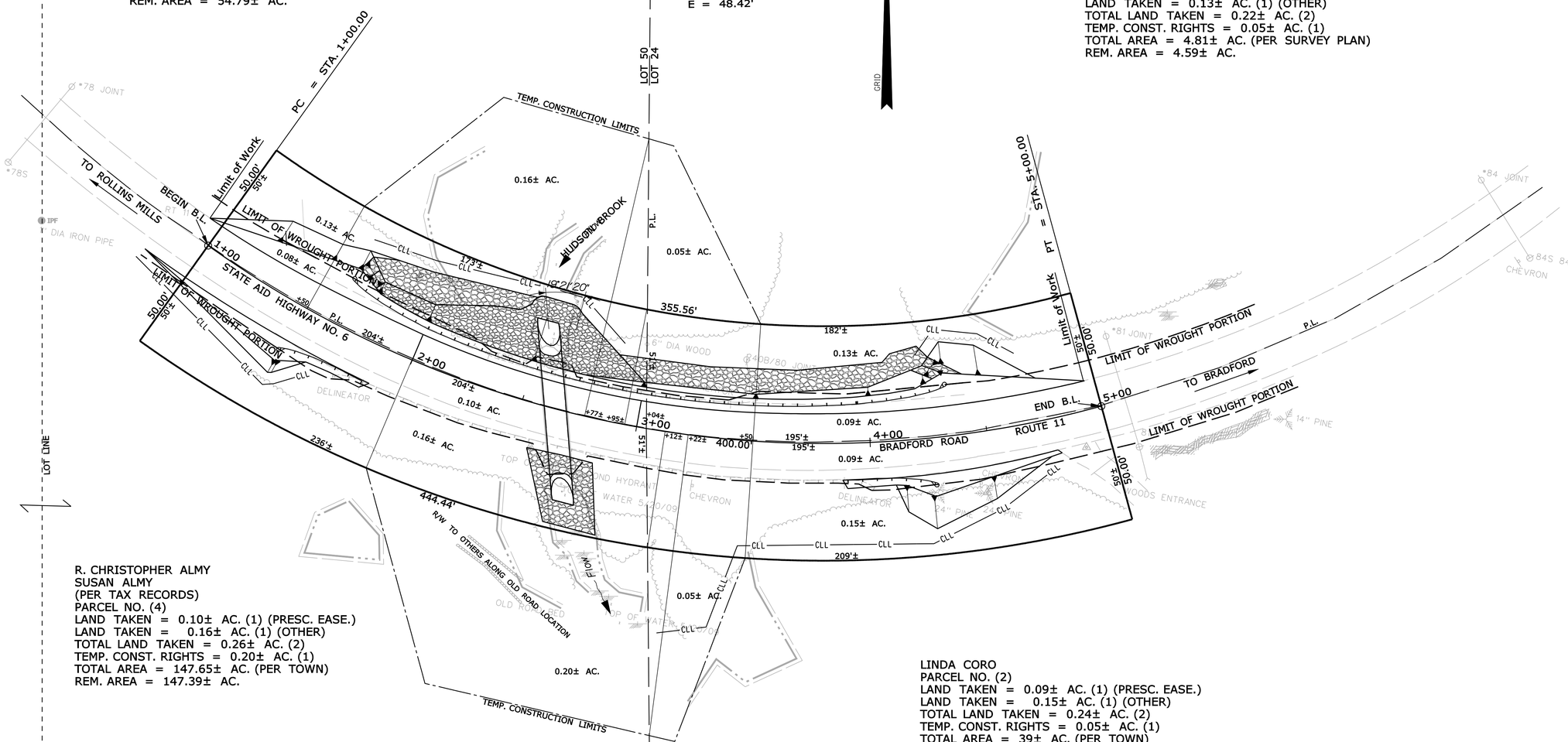

R. CHRISTOPHER ALMY
SUSAN ALMY
(PER TAX RECORDS)
PARCEL NO. (4)
LAND TAKEN = 0.10± AC. (1) (PRESC. EASE.)
LAND TAKEN = 0.16± AC. (1) (OTHER)
TOTAL LAND TAKEN = 0.26± AC. (2)
TEMP. CONST. RIGHTS = 0.20± AC. (1)
TOTAL AREA = 147.65± AC. (PER TOWN)
REM. AREA = 147.39± AC.

LINDA CORO
PARCEL NO. (2)
LAND TAKEN = 0.09± AC. (1) (PRESC. EASE.)
LAND TAKEN = 0.15± AC. (1) (OTHER)
TOTAL LAND TAKEN = 0.24± AC. (2)
TEMP. CONST. RIGHTS = 0.05± AC. (1)
TOTAL AREA = 39± AC. (PER TOWN)
REM. AREA = 38.76± AC.

THIS PARCEL HAS OVERLAPPING CLAIMS BY DEED AND RECORDED SURVEY PLANS. THIS PLAN DOES NOT PURPORT TO RESOLVE ANY PRIVATE BOUNDARY ISSUES.

RIGHT OF WAY REFERENCE:

PENOBSCOT COUNTY R.O.D.
BOOK 1232 PAGE 280
RIGHT OF WAY FROM FLOYD LOVEJOY
TO THE TOWN OF CHARLESTON
FOR THE RELOCATION OF RICHARDS BRIDGE

NOTE: PRESCRIPTIVE EASEMENT FOR HIGHWAY PURPOSES WITHIN LIMITS OF WROUGHT PORTION (L.O.W.P.)

SEE PLAN OF PROPERTY OF PETER HARITOS
PREPARED BY WILLIAM E. WEBBER
PENOBSCOT COUNTY R.O.D. B62-80

SEE SURVEY PLAN OF PART OF HARRY C. WHELDEN, JR. LAND
PREPARED BY SHERWOOD TUELL PENOBSCOT R.O.D. B59-85

PROPERTY LINE AS SHOWN ON
PROPERTY MAP NO. 6
TOWN OF CHARLESTON

SEE TOWN OF CHARLESTON LOT PLAN
BY NORCROSS, DATED APRIL 1907

SEE PLAN OF PROPERTY OF BARBARA LORD
PREPARED BY WILLIAM WEBBER
PENOBSCOT COUNTY R.O.D. D66-91

BRIDGE NO. 3972 — RICHARDS BRIDGE OVER HUDSON BROOK — PIN 16693.00

SYMBOLS
- IP or IPF (IRON PIPE or PIN FOUND)
- ST. (SEPTIC TANK)
- (ROW MONUMENT)
- &BM (TRAVERSE POINT)
- WELL
- GROUNDING UNIT LINE
- CONSTRUCTION LIMIT LINE
- PROPERTY LINE
- LIMITS OF WROUGHT PORTION (L.O.W.P.)
- NEW RIGHT OF WAY
- NEW ROW WITHIN EXIST. ROW
- CONTROL OF ACCESS
- WATER LINE
- GAS LINE
- ELECTRIC LINE
- TELEPHONE LINE
- SEWER LINE

ITEM	TECH	CHECKED
BASE MAP		
EXIST. R/W	PNS	
PROP. LINES	PNS	
AREAS	PNS	

STATE OF MAINE
DEPARTMENT OF TRANSPORTATION
16 STATE HOUSE STATION - AUGUSTA, ME 04333-0016
CHARLESTON
RIGHT OF WAY MAP

REVISIONS

NO.	DATE	DESCRIPTION	BY

PLAN FILED IN PLAN BOOK		PAGE	COUNTY RECORD			
NO.	GRANTOR	INSTRUMENT	DATE	BOOK	PAGE
		COND.	3/16/10	12075	240

DAVID A. COLE
COMMISSIONER
KENNETH L. SWEENEY
CHIEF ENGINEER
DATE

STATE AID HIGHWAY NO. 6
ROUTE 11 BRADFORD ROAD
CHARLESTON PENOBSCOT COUNTY
STATE PROJECT 16693.00

DECEMBER 2009 | RIGHT-OF-WAY MAP | D.O.T. FILE NO. 10-453
SCALE 1" = 25' | SHEET 1 OF 1

SHEET NUMBER
8
OF 8

Filename: ...\00\ROW\MSTA\001_RWPLAN1.dgn Division: BRIDGE Username: david.sullivan Date:3/22/2010