STATE OF MAINE
DEPARTMENT OF TRANSPORTATION

SPECIFICATIONS

Superstructure Design: Load and Resistance Factor Design per AASHTO LRFD Bridge Design Specifications, Fourth Edition 2007, supplemented by research from University of Maine.

Substructure Design: Load and Resistance Factor Design per AASHTO LRFD Bridge Design Specifications, Fourth Edition 2007 and Interim Specifications through 2009.

DESIGN LOADING

Live Load ..... HL - 93 Modified

TRAFFIC DATA

Current (2010) AADT	700
Future (2030) AADT	910
DHV - % of AADT	15
Design Hour Volume	137
Heavy Trucks (% of AADT)	3
Heavy Trucks (% of DHV)	3
Directional Distribution (% of DHV)	61
18 kip Equivalent P 2.0	9
18 kip Equivalent P 2.5	8
Design Speed (mph)	30

HYDROLOGIC DATA

Drainage Area	41.3 sq mi
Design Discharge (Q50)	957 cfs
Check Discharge (Q100)	1076 cfs
Headwater Elevation (Q50)	91.6 ft
Headwater Elevation (Q100)	92.0 ft
Discharge Velocity (Q50)	10.4 fps
Discharge Velocity (Q100)	10.8 fps
Headwater Elevation (Q1.1)	89.3 ft
Discharge Velocity (Q1.1)	3.6 fps
Headwater Elevation (Q25)	91.3 ft

MATERIALS

Concrete:

Seals	Class "S"
Arch Tube Concrete	See Special Provision
All Other	Class "A"
Reinforcing Steel	ASTM A 615/A 615M, Grade 60

Structural Steel:

Headwall	ASTM A709, Grade 50
H-Pile	ASTM A572, Grade 50
High Strength Bolts	ASTM A325, Type 1

BASIC DESIGN STRESSES

Concrete Class "A"	f 'c = 4,350 psi
Concrete Class "S"	f 'c = 2,900 psi
Arch Tube Concrete	f 'c = 6,000 psi
Reinforcing Steel	f y = 60,000 psi

Structural Steel:

ASTM A 709, Grade 50	F y = 50,000 psi
ASTM A 709, Grade 36	F y = 36,000 psi
ASTM A 325	F μ = 120,000 psi

UTILITIES

Bangor Hydro-Electric Company
Fairpoint Communications
Time Warner Cable
Old Town Water District

BRADLEY
PENOBSCOT COUNTY
JENKINS BRIDGE
OVER
GREAT WORKS STREAM
CRAM STREET
PROJECT NO. BH-1668(700)X
PROJECT LENGTH 0.047 mi.
BRIDGE CULVERT REPLACEMENT
BRIDGE NO. 3365

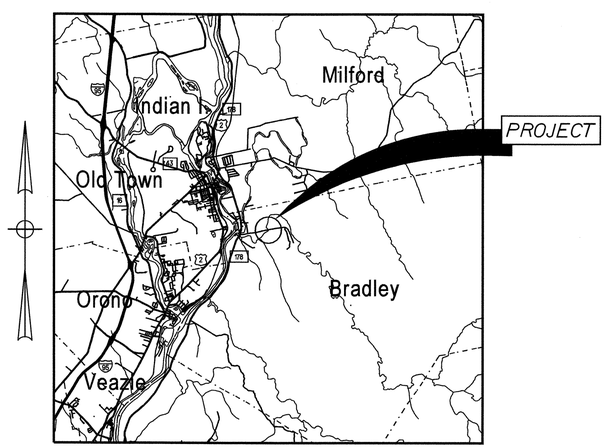

LOCATION MAP

2 0 2 4
Scale of Miles

LIST OF DRAWINGS

Title Sheet 1
Estimated Quantities & Notes 2
Plan & Profile 3
Boring Location Plan & Interpretive Subsurface Profile 4
Boring Logs 5
Cross Sections 6-8
Composite Arch Plan and Sections 9
Abutment No. 1 Seal and Pile Layout 10
Abutment No. 1 Details 11
Abutment No. 2 Seal and Pile Layout 12
Abutment No. 2 Details 13
Wingwall Details 14
Composite Arch Details 15
Headwall Details 16-17
R/W Plan 18

Engineering Seal applies to details within these plans related to the headwall and composite concrete arch superstructure

STATE OF MAINE
ZEYN BURHAN UZMAN
10095
LICENSED
PROFESSIONAL ENGINEER

S E A
SEA CONSULTANTS INC.
Scientists/Engineers/Architects

STATE OF MAINE
DEPARTMENT OF TRANSPORTATION

		DATE
APPROVED		
COMMISSIONER:		4/15/10
CHIEF ENGINEER:		4/15/10

STATE OF MAINE
ZEYN BURHAN UZMAN
10095
LICENSED
PROFESSIONAL ENGINEER

SIGNATURE		
P.E. NUMBER		
DATE		

PROJECT INFORMATION

PROGRAM	BRIDGE
PROJECT MANAGER	N. BENOIT
DESIGNER	K. WOOD
CONSULTANT	S E A CONSULTANTS, INC.
PROJECT RESIDENT	
CONTRACTOR	
PROJECT COMPLETION DATE	

PIN 16687.00

BH-1668(700)X

BRADLEY
JENKINS BRIDGE

TITLE SHEET

SHEET NUMBER
1
OF 18

Filename: \00\BRIDGE\MSTA\001_Title.dgn Division: BRIDGE Username: kris.constanzer Date:4/12/2010

ESTIMATED QUANTITIES			
ITEM NO.	DESCRIPTION	QUANTITY	UNIT
201.23	REMOVING SINGLE TREE TOP ONLY	3	EA
201.24	REMOVING STUMP	2	EA
202.19	REMOVING EXISTING BRIDGE	1	LS
203.20	COMMON EXCAVATION	650	CY
203.24	COMMON BORROW	10	CY
203.25	GRANULAR BORROW	165	CY
206.061	STRUCTURAL EXCAVATION - DRAINAGE AND MINOR STRUCTURES BELOW GRADE	10	CY
206.082	STRUCTURAL EARTH EXCAVATION - MAJOR STRUCTURES, PLAN QUANTITY	150	CY
304.10	AGGREGATE SUBBASE COURSE GRAVEL	740	CY
403.210	HOT MIX ASPHALT, 9.5 MM NOMINAL MAXIMUM SIZE	94	T
403.213	HOT MIX ASPHALT, 12.5 MM NOMINAL MAXIMUM SIZE, BASE	96	T
409.15	BITUMINOUS TACK COAT APPLIED	30	GAL
501.231	DYNAMIC LOADING TEST	2	EA
501.50	STEEL H-BEAM PILES (89 LB/FT), DELIVERED	570	LF
501.501	STEEL H-BEAM PILES (89 LB/FT), IN PLACE	525	LF
501.90	PILE TIPS	18	EA
501.92	PILE DRIVING EQUIPMENT MOBILIZATION	1	LS
502.21	STRUCTURAL CONCRETE, ABUTMENTS AND RETAINING WALLS	73	CY
502.22	STRUCTURAL CONCRETE, ABUTMENTS AND RET WALLS (PLACED UNDERWATER)	141	CY
502.41	STRUCTURAL CONCRETE SUPERSTRUCTURE SLAB	25	CY
503.12	REINFORCING STEEL, FABRICATED AND DELIVERED	4500	LB
503.13	REINFORCING STEEL, PLACING	4500	LB
503.16	WELDED STEEL WIRE FABRIC, COMPLETE IN PLACE	1200	LB
508.13	MEMBRANE WATERPROOFING (160 SY)	1	LS
509.60	FIBERGLASS REINFORCED PLASTIC SHEATHING (126 SY)	1	LS
509.74	COMPOSITE ARCH SUPERSTRUCTURE ERECTION, INSTALLATION ONLY	1	LS
509.75	COMPOSITE HEADWALL (440 SF)	1	LS
510.10	SPECIAL DETOUR, 10 FOOT RW WIDTH VEH AND PED TRAFFIC NOT SEPARATED	1	LS
511.07	COFFERDAM - ABUTMENT NO. 1	1	LS
511.07	COFFERDAM - ABUTMENT NO. 2	1	LS
512.081	FRENCH DRAINS (72 LF)	1	LS
514.06	CURING BOX FOR CONCRETE CYLINDERS	1	EA
526.301	TEMPORARY CONCRETE BARRIER, TYPE 1	1	LS
527.303	ENERGY ABSORBING SYSTEM (ET PLUS) TYPE 3	1	EA
603.16	15 IN CULVERT PIPE OPTION 1	28	LF
606.17	GUARDRAIL TYPE 3b - SINGLE RAIL	363	LF
606.21	GUARDRAIL TYPE 3b - 15 FT RADIUS AND LESS	25	LF
606.265	TERMINAL END - SINGLE RAIL - GALVANIZED STEEL	1	EA
606.353	REFLECTORIZED FLEXIBLE GUARDRAIL MARKER	8	EA
606.753	WIDEN SHOULDER FOR LOW VOLUME GUARDRAIL END - TYPE 3	2	EA
606.78	LOW VOLUME GUARDRAIL END - TYPE 3	2	EA
609.31	CURB TYPE 3	86	LF
610.08	PLAIN RIPRAP	30	CY
610.16	HEAVY RIPRAP	385	CY
610.18	STONE DITCH PROTECTION	10	CY
613.319	EROSION CONTROL BLANKET	35	SY
615.07	LOAM	51	CY
618.1401	SEEDING METHOD NUMBER 2, PLAN QUANTITY	11	UN
619.1201	MULCH, PLAN QUANTITY	11	UN
619.1401	EROSION CONTROL MIX	102	CY
620.58	EROSION CONTROL GEOTEXTILE	370	SY
627.733	4" WHITE OR YELLOW PAVEMENT MARKING LINE	1470	LF
629.05	HAND LABOR STRAIGHT TIME	80	HR
631.12	ALL PURPOSE EXCAVATOR (INCLUDING OPERATOR)	20	HR
631.14	GRADER (INCLUDING OPERATOR)	20	HR
631.15	ROLLER, EARTH AND BASE (INCLUDING OPERATOR)	20	HR
631.172	TRUCK-LARGE (INCLUDING OPERATOR)	20	HR
635.14	PREFABRICATED CONCRETE MODULAR GRAVITY WALL	1090	SF
639.18	FIELD OFFICE, TYPE A	1	EA
643.72	TEMPORARY TRAFFIC SIGNAL: TEMPORARY BRIDGE	1	LS
652.31	TYPE I BARRICADES	20	EA
652.312	TYPE III BARRICADES	7	EA
652.33	DRUM	24	EA
652.34	CONE	35	EA
652.35	CONSTRUCTION SIGNS	300	SF
652.361	MAINTENANCE OF TRAFFIC CONTROL DEVICES	1	LS
652.38	FLAGGERS	240	HR
656.75	TEMPORARY SOIL EROSION AND WATER POLLUTION	1	LS
659.10	MOBILIZATION	1	LS

GENERAL CONSTRUCTION NOTES

1. For easements, construction limits and right of way lines, refer to Right of Way Map.

2. The clearing limits as shown on the plans are approximate. The exact limits will be established in the field by the Resident. Payment for clearing will be considered incidental to Contract items.

3. All utility facilities shall be adjusted by the respective utilities unless otherwise noted.

4. Do not excavate for Aggregate Subbase Course where existing material is suitable as determined by the Resident.

5. In areas where the Resident directs the Contractor not to excavate to the subgrade line shown on the plans, payment for removing existing pavement, grubbing, shaping, ditching, and compacting the existing subbase and layers of new subbase 6 inches or less thick will be made under appropriate equipment rental items.

6. All embankment material, except as otherwise shown, placed below EL. 92.0 shall be Granular Borrow meeting the requirements of Subsection 703.19, Material for Underwater Backfill.

7. Place 4'-0" deep riprap on sideslopes between streambed and EL. 92.0. Place 1'-0" deep riprap on streambed and sideslopes above EL. 92.0 to the top of slope as shown.

8. Stones which cannot be rolled or compacted into the surface of the shoulder shall be removed by hand raking. Payment for hand raking will be considered incidental to Item No. 304.10, Aggregate Subbase Course - Gravel.

9. Place loam 2 inches deep on all new or reconstructed sideslopes or as directed by the Resident.

10. Erosion Control Mix may be substituted in those areas normally receiving loam and seed as directed by the Resident. Placement shall be in accordance with Standard Specifications Section 619, Mulch. Payment will be made under Item No. 619.1401, Erosion Control Mix.

11. Place a 24-in. wide strip of Erosion Control Blanket on the sideslopes along the top of the riprap and behind the wingwalls.

12. Guardrail posts as shown in the Standard Details shall be modified from the indicated length of 6 feet to a length of 7 feet with an embedment of 4.5 feet. Payment will be considered incidental to the guardrail pay items.

13. The ET Plus end treatment or Low Volume Guardrail End shall be installed concurrently with the placement of each section of beam guardrail.

14. During construction one-way traffic wil be maintained at all times as detailed in the Special Provisions.

15. Extended-use Erosion Control Blanket, seeded gutters, riprap downspouts, and other gutters lined with Stone Ditch Protection shall be constructed after paving and shoulder work is completed, where it is apparent that runoff will cause continual erosion. Payment will be made under the appropriate Contract items.

16. Project information referred to below may be accessed at the following MaineDOT web address: http://www.maine.gov/mdot/comprehensive-list-projects/project-information.php.

17. The hydrologic report of the bridge site may be accessed at the MaineDOT web address. The hydrologic report is based on MaineDOT's interpretation of the information obtained for the subject site. No assurance is given that the information or the conclusions of the report will be representative of actual conditions at the time of construction.

18. The project geotechnical report titled: "Geotechnical Design Report for the Replacement of Jenkins Bridge, December 23, 2009 and Addendum #1 and #2, March 24, 2010 and March 31, 2010" may be accessed at the MaineDOT web address.

19. Geotechnical information furnished or referred to in this plan set is for the use of the Bidders and the Contractor. No assurance is given that the information or interpretations will be representative of actual subsurface conditions at the construction site. MaineDOT will not be responsible for the Bidders' or Contractor's interpretations of, or conclusions drawn from, the geotechnical information. The boring logs contained in the plan set present factual and interpretive subsurface information collected at discrete locations. Data provided may not be representative of the subsurface conditions between the boring locations.

20. Quantities included for pay items measured and paid for by Lump Sum are estimated quantities and are provided by MaineDOT for informational purposes only. Lump Sum pay items will be paid for at the Contract Bid amount, with no addition or reduction in payment to the Contractor if the actual final quantities are different from the MaineDOT provided estimated quantities, except as follows:

a. If a Lump Sum pay item is eliminated, the requirements of Standard Specifications Section 109.2, Elimination of Items, will take precedence.

b. If other Contract Documents specifically allow a change in payment for a Lump Sum pay item, those requirements will be followed.

c. If a design change results in changes to estimated quantities for Lump Sum pay items, price adjustments will be made in accordance with Standard Specifications Section 109.7, Equitable Adjustments to Compensation.

21. Two reflectorized flexible G.R. markers (Item 606.353) will be installed at each guardrail end.

22. Heavy rip rap placed in the channel as streambed material below the normal high water line of Great Works Stream shall be placed as approved by the Resident, and such that the invert or top elevation of the heavy rip rap is six inches below the immediate upstream and downstream natural bed elevation.

23. Temporary detour shall be surfaced with 2" Untreated Aggregate Surface Course conforming to Section 411. Payment will be incidental to 510.10 Special Detour.

SEA
SEA CONSULTANTS INC.
Scientists/Engineers/Architects

STATE OF MAINE
DEPARTMENT OF TRANSPORTATION

BH-1668(700)X

PIN 16687.00

BRIDGE NO. 3365

BRIDGE PLANS

PROJ. MANAGER	N. BENOIT	BY	DATE
DESIGN-DETAILED	K. WOOD	K. CONSTANZER	4\12\10
CHECKED-REVIEWED	K. WOOD	P. METHERLY	
DESIGN2-DETAILED2			
DESIGN3-DETAILED3			
REVISIONS 1			
REVISIONS 2			
REVISIONS 3			
REVISIONS 4			
FIELD CHANGES			

SIGNATURE

P.E. NUMBER

DATE

JENKINS BRIDGE
GREAT WORKS STREAM
BRADLEY PENOBSCOT COUNTY

ESTIMATED QUANTITIES AND NOTES

SHEET NUMBER
2
OF 18

Filename: ...\BRIDGE\MSTA\002_Estimate.dgn Division: BRIDGE Username: kris.constanzer Date:4/22/2010

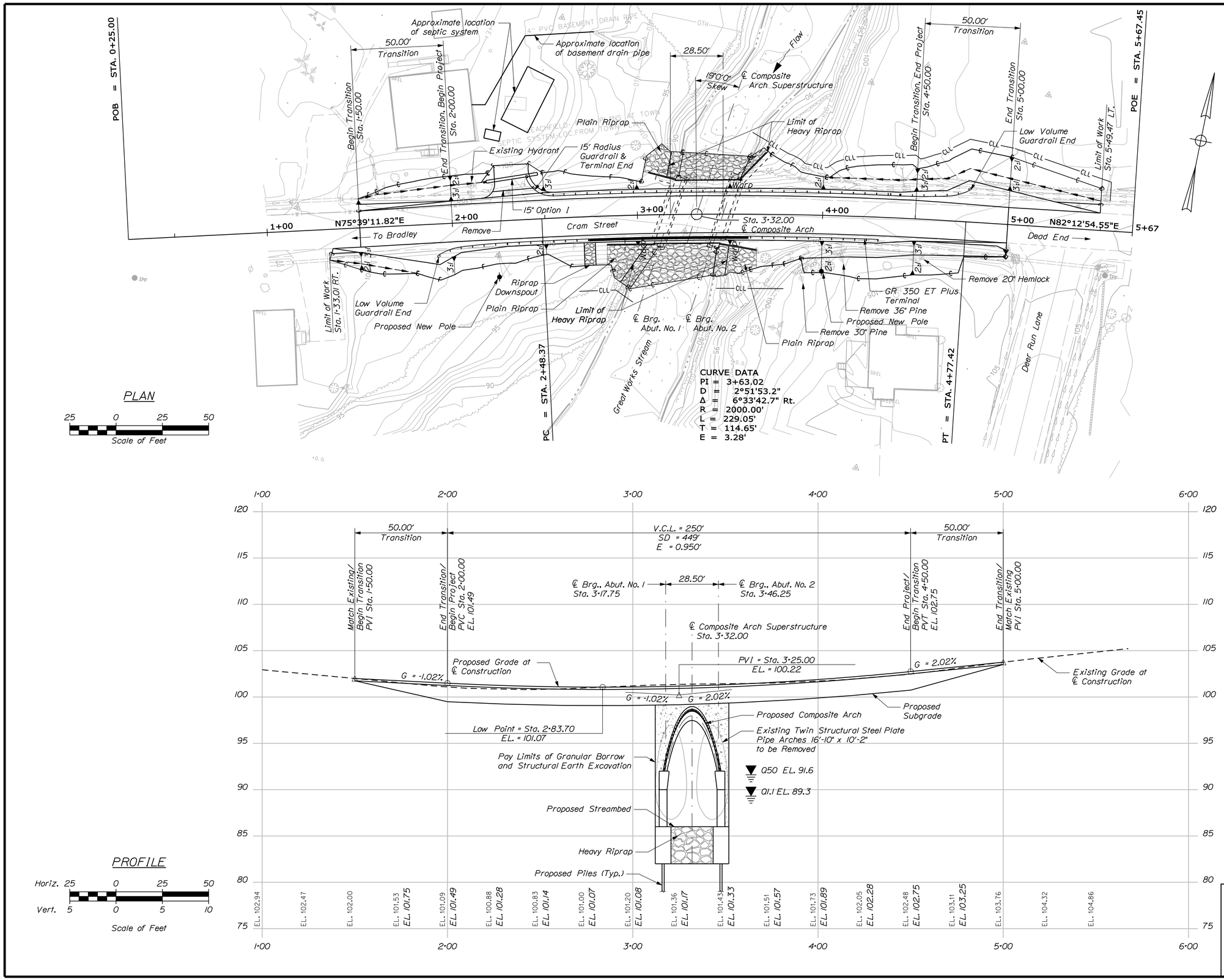

Filename: ...\00\BRIDGE\MSTA\003_Plan.dgn Division: BRIDGE Username: kris.constanzer Date:4/22/2010

STATE OF MAINE
DEPARTMENT OF TRANSPORTATION

BH-1668(700)X

PIN 16687.00

BRIDGE NO. 3365

BRIDGE PLANS

PROJ. MANAGER	N. BENOIT	BY	DATE
DESIGN-DETAILED	K. WOOD	K. CONSTANZER	
CHECKED-REVIEWED	K. WOOD	P. HETHERLY	4\12\10
DESIGN2-DETAILED2			
DESIGN3-DETAILED3			
REVISIONS 1			
REVISIONS 2			
REVISIONS 3			
REVISIONS 4			
FIELD CHANGES			

SIGNATURE

P.E. NUMBER

DATE

JENKINS BRIDGE
GREAT WORKS STREAM
BRADLEY PENOBSCOT COUNTY

PLAN & PROFILE

SEA
SEA CONSULTANTS INC.
Scientists/Engineers/Architects

SHEET NUMBER
3
OF 18

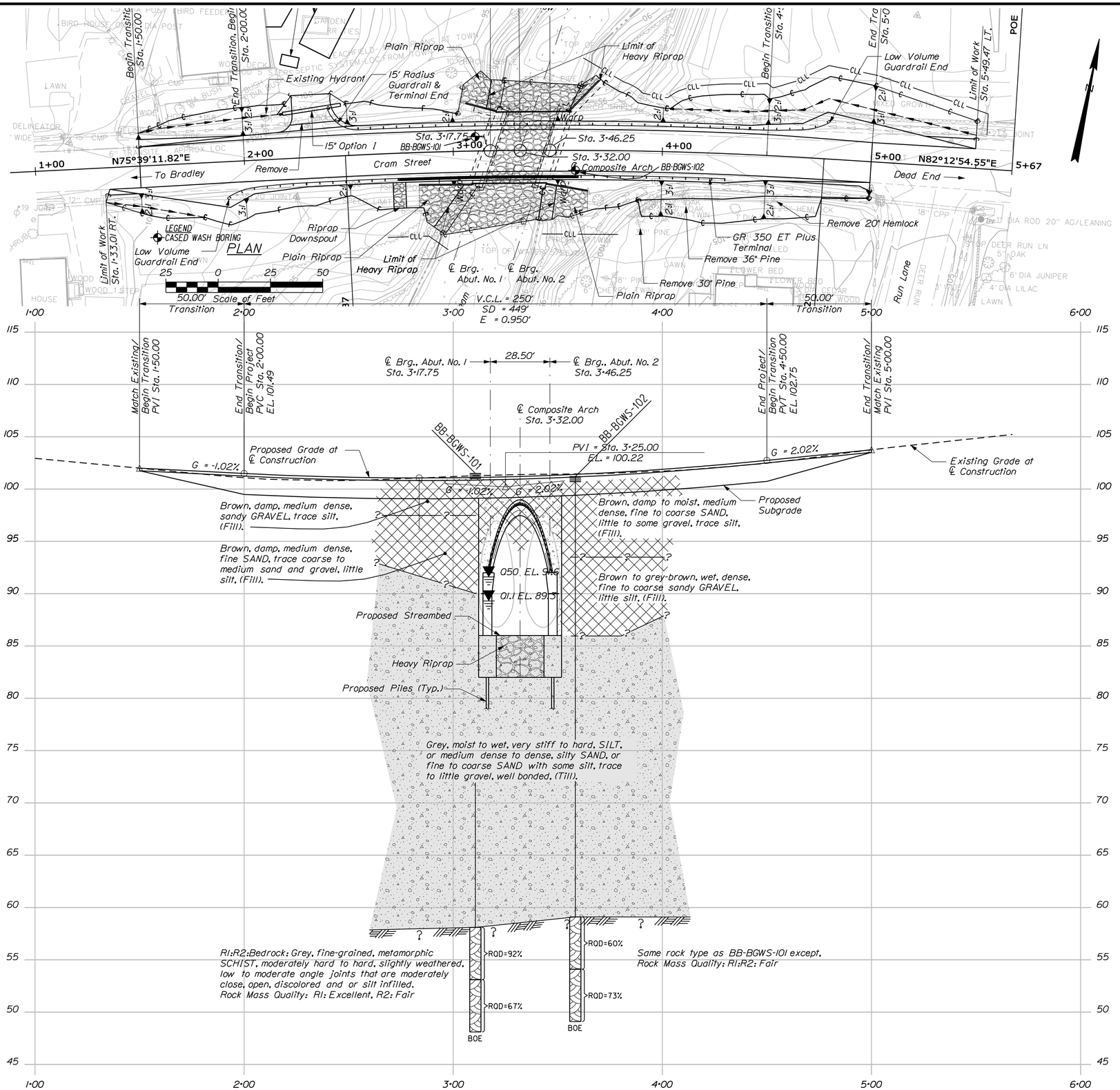

Note: This generalized interpretive soil profile is intended to convey trends in subsurface conditions. The boundaries between strata are approximate and idealized, and have been developed by interpretations of widely spaced explorations and samples. Actual soil transitions may vary and are probably more erratic. For more specific information refer to the exploration logs.

STATE OF MAINE
DEPARTMENT OF TRANSPORTATION

BH-1668(700)X

PIN 16687.00

BRIDGE NO. 3365

BRIDGE PLANS

		BY	DATE
PROJ. MANAGER	Steve Bodge		
DESIGN-DETAILED	M.MOREAU	T.WHITE	NOV 2009
CHECKED-REVIEWED	-----	-----	-----
DESIGN2-DETAILED2	-----	-----	-----
DESIGN3-DETAILED3	-----	-----	-----
REVISIONS 1	-----	-----	-----
REVISIONS 2	-----	-----	-----
REVISIONS 3	-----	-----	-----
REVISIONS 4	-----	-----	-----
FIELD CHANGES	-----	-----	-----

SIGNATURE

P.E. NUMBER

DATE

JENKINS BRIDGE
GREAT WORKS STREAM
BRADLEY PENOBSCOT COUNTY

BORING LOCATION PLAN & INTERPRETIVE SUBSURFACE PROFILE

SHEET NUMBER

4

OF 18

Filename: ...\GEOTECH\MSTA\004_BLP&ISP1.dgn Division: BRIDGE Username: brian.j.nichols Date:4/12/2010

Filename: ...\msta\005_BORING LOGS1.dgn Division: BRIDGE Username: brian.j.nichols Date:4/12/2010

Maine Department of Transportation

Soil/Rock Exploration Log

US CUSTOMARY UNITS

Project: Jenkins Bridge #3365 which carries Cram Street over the	Location: Bradley, Maine	Boring No.: BB-BGWS-101	PIN: 16687.00
Driller: MaineDOT	Elevation (ft.) 101.5	Auger ID/OD: Hollow Stem	
Operator: E. Giguere	Datum: NAVD 88	Sampler: Standard Split Spoon	
Logged By: B. Babcock (H&A)	Rig Type: CME 45C	Hammer Wt./Fall: 140#/30"	
Date Start/Finish: 8/5/09-8/5/09	Drilling Method: Cased Wash Boring	Core Barrel: NQ-2"	
Boring Location: 3+10.6, 6.8 Lt.	Casing ID/OD: HW	Water Level*: 11.5' bgs.	
Hammer Efficiency Factor: 0.84	Hammer Type: Automatic ☒ Hydraulic ☐ Rope & Cathead ☐		

Definitions:
D = Split Spoon Sample; MD = Unsuccessful Split Spoon Sample attempt; U = Thin Wall Tube Sample; MU = Unsuccessful Thin Wall Tube Sample attempt; V = Insitu Vane Shear Test, PP = Pocket Penetrometer; MV = Unsuccessful Insitu Vane Shear Test attempt
R = Rock Core Sample; SSA = Solid Stem Auger; HSA = Hollow Stem Auger; RC = Roller Cone; WOH = weight of 140lb. hammer; WOR/C = weight of rods or casing; WO1P = Weight of one person
S_u = Insitu Field Vane Shear Strength (psf); T_v = Pocket Torvane Shear Strength (psf); q_p = Unconfined Compressive Strength (ksf); N-uncorrected = Raw field SPT N-value; Hammer Efficiency Factor = Annual Calibration Value; N_{60} = SPT N-uncorrected corrected for hammer efficiency; N_{60} = (Hammer Efficiency Factor/60%)*N-uncorrected
$S_{u(lab)}$ = Lab Vane Shear Strength (psf); WC = water content, percent; LL = Liquid Limit; PL = Plastic Limit; PI = Plasticity Index; G = Grain Size Analysis; C = Consolidation Test

Depth (ft.)	Sample No.	Pen./Rec. (in.)	Sample Depth (ft.)	Blows (/6 in.) Shear Strength (psf) or RQD (%)	N-uncorrected	N_{60}	Casing Blows	Elevation (ft.)	Graphic Log	Visual Description and Remarks	Laboratory Testing Results/ AASHTO and Unified Class
0							HSA	101.00		ASPHALT. (0.50)	
	1D	24/10	1.00 - 3.00	8/8/8/7	16	22				Brown, damp, medium dense, fine to coarse sandy GRAVEL, trace silt, (Fill).	G#246283 A-1-a, GW-GM WC=2.7%
5	2D	24/16	5.00 - 7.00	6/5/3/7	8	11				Brown, damp, medium dense, fine SAND, trace fine gravel, trace coarse to medium sand, little silt, (Fill).	G#246284 A-2-4, SP-SM WC=5.2%
10	3D	24/12	10.00 - 12.00	4/4/4/17	8	11	27				
							25	90.00		(11.50) Brown to grey, moist to wet, medium dense, coarse to fine SAND, some silt, little coarse to fine gravel, occasional bonding in bottom 6" of recovery, (Glacial Till).	
							101				
							186				
							277			Pushed Cobble from 14.9-15.4' bgs.	
15	4D	24/16	15.40 - 17.40	9/23/20/29	43	60	129			Grey, moist, hard, SILT, some coarse to fine sand, little coarse to fine gravel, well bonded. (Till)	G#246285 A-4, ML WC=9.3%
							150				
							a165 bWA			a165=120(4")+45(8") bCasing Refusal at 17.4' bgs, washed ahead to 19.6' bgs.	
							80				
	5D	24/10	19.60 - 21.60	14/14/13/13	27	38	96 WASH			Grey, wet, dense, coarse to fine SAND, some silt, little coarse to fine gravel, well bonded. (Till)	
20							AHEAD				
25	6D	24/8	25.00 - 27.00	13/9/9/9	18	25				Grey, wet, very stiff, SILT, some coarse to fine sand, little coarse to fine gravel, well bonded. (Till)	G#246286 A-4, ML WC=10.2%
30	7D	24/12	30.00 - 32.00	11/13/8/9	21	29				Similar to above.	
35	8D	24/14	35.00 - 37.00	14/18/13/31	31	43				Grey, wet, dense, coarse to fine silty SAND, trace coarse to fine gravel, well bonded, occasional stratification. (Till)	G#246287 A-4, SM WC=10.8%
							cNQ			Cobble from 37.2-37.8' bgs. cAdvanced borehole from 37.2-42.7' bgs with NQ Barrel. No recovery, cored through 0.6' cobble and grey Glacial Till similar to 8D.	
40											
	9D	8.4/6	42.70 - 43.40	27/100(2.4")	---					Grey, wet, very dense, coarse to fine SAND, some silt, little coarse to fine gravel, well bonded, occasional stratification. (Till)	
	R1	60/60	43.40 - 48.40	RQD = 92%			NQ-2	58.10		(43.40) Top of Bedrock at Elev. 58.1' R1:Bedrock: Grey, fine grained, metamorphic SCHIST, hard, slightly weathered, low angle joints, moderately close, open, joints are slightly weathered to decomposed, silt infilled, one silt seam 1 cm thick at 46.0', quartzose veins throughout. [Vassalboro Formation] Rock Quality Mass: Excellent R1:Core Times (min:sec) 43.4-44.4' (2:45) 44.4-45.4' (2:16) 45.4-46.4' (1:45) 46.4-47.4' (2:00) 47.4-48.4' (2:36) 100% Recovery	
45											
	R2	60/59	48.40 - 53.40	RQD = 67%				53.10		(48.40) R2:Bedrock: Same rock type, except slightly to moderately weathered, moderately angled joints, moderately close, open, joints are slightly to highly weathered with silt infilling, one highly weathered zone at 52.1' to 52.7'. Rock Quality Mass: Fair R2:Core Times (min:sec) 48.4-49.4' (2:01) 49.4-50.4' (2:10) 50.4-51.4' (2:00) 51.4-52.4' (2:24) 52.4-53.4' (2:31) 98% Recovery	
50											
								48.10		(53.40) Bottom of Exploration at 53.40 feet below ground surface.	
55											
60											
65											
70											
75											

Remarks:

Stratification lines represent approximate boundaries between soil types; transitions may be gradual.

* Water level readings have been made at times and under conditions stated. Groundwater fluctuations may occur due to conditions other than those present at the time measurements were made.

Page 1 of 1

Boring No.: BB-BGWS-101

Maine Department of Transportation

Soil/Rock Exploration Log

US CUSTOMARY UNITS

Project: Jenkins Bridge #3365 which carries Cram Street over the	Location: Bradley, Maine	Boring No.: BB-BGWS-102	PIN: 16687.00
Driller: MaineDOT	Elevation (ft.) 101.2	Auger ID/OD: Hollow Stem	
Operator: E. Giguere	Datum: NAVD 88	Sampler: Standard Split Spoon	
Logged By: B. Babcock (H&A)	Rig Type: CME 45C	Hammer Wt./Fall: 140#/30"	
Date Start/Finish: 8/4/09-8/4/09	Drilling Method: Cased Wash Boring	Core Barrel: NQ-2"	
Boring Location: 3+58.4, 9.6 Rt.	Casing ID/OD: HW	Water Level*: 6.8' bgs.	
Hammer Efficiency Factor: 0.84	Hammer Type: Automatic ☒ Hydraulic ☐ Rope & Cathead ☐		

Definitions:
D = Split Spoon Sample; MD = Unsuccessful Split Spoon Sample attempt; U = Thin Wall Tube Sample; MU = Unsuccessful Thin Wall Tube Sample attempt; V = Insitu Vane Shear Test, PP = Pocket Penetrometer; MV = Unsuccessful Insitu Vane Shear Test attempt
R = Rock Core Sample; SSA = Solid Stem Auger; HSA = Hollow Stem Auger; RC = Roller Cone; WOH = weight of 140lb. hammer; WOR/C = weight of rods or casing; WO1P = Weight of one person
S_u = Insitu Field Vane Shear Strength (psf); T_v = Pocket Torvane Shear Strength (psf); q_p = Unconfined Compressive Strength (ksf); N-uncorrected = Raw field SPT N-value; Hammer Efficiency Factor = Annual Calibration Value; N_{60} = SPT N-uncorrected corrected for hammer efficiency; N_{60} = (Hammer Efficiency Factor/60%)*N-uncorrected
$S_{u(lab)}$ = Lab Vane Shear Strength (psf); WC = water content, percent; LL = Liquid Limit; PL = Plastic Limit; PI = Plasticity Index; G = Grain Size Analysis; C = Consolidation Test

Depth (ft.)	Sample No.	Pen./Rec. (in.)	Sample Depth (ft.)	Blows (/6 in.) Shear Strength (psf) or RQD (%)	N-uncorrected	N_{60}	Casing Blows	Elevation (ft.)	Graphic Log	Visual Description and Remarks	Laboratory Testing Results/ AASHTO and Unified Class
0							HSA	100.70		ASPHALT. (0.50)	
	1D	24/12	1.00 - 3.00	7/7/6/7	13	18				Brown, damp, medium dense, coarse to fine SAND, some gravel, trace silt, (Fill).	G#246288 A-1-b, SW-SM WC=4.0%
5	2D	24/6	5.00 - 7.00	3/12/5/4	17	24				Brown, damp to moist, medium dense, coarse to fine SAND, little gravel, trace silt, (Fill).	
10	3D	24/6	10.00 - 12.00	15/14/4/3	28	39	20			Brown to grey-brown, wet, dense, coarse to fine sandy GRAVEL, little silt, (Fill).	G#246289 A-1-b, SM WC=12.8%
							15				
							15				
							20				
							112			Cobble from 14.2-15.1' bgs.	
15	4D	24/18	15.40 - 17.40	5/6/8/15	14	20	104	86.10		(15.10) Grey, moist, very stiff, SILT, some fine to coarse sand, trace gravel, well bonded, (Glacial Till).	G#246290 A-4, ML WC=10.7%
							163				
							160			Washed ahead to 20.0' bgs.	
							150				
							213				
20	5D	24/12	20.00 - 22.00	8/6/8/9	14	20	WASH			Grey, moist, medium dense, fine to coarse sandy SILT, little gravel, well bonded. (Till)	G#246291 A-4, SM WC=10.3%
							AHEAD				
25	6D	24/12	25.00 - 27.00	24/19/19/8	38	53				Grey, moist, hard, SILT, some coarse to fine sand, trace gravel, well bonded, occasionally stratified, (Till).	
30	7D	24/16	30.00 - 32.00	12/21/15/13	36	50				Grey, wet, hard, fine to coarse sandy SILT, trace coarse to fine gravel, well bonded, occasional stratification, (Glacial Till).	G#246292 A-4, ML WC=11.0%
35	8D	24/14	35.00 - 37.00	15/20/12/17	32	45				Grey, wet, hard, SILT, some fine sand, trace coarse to medium sand, trace coarse to fine gravel, well bonded, occasional stratification, (Till).	
40	9D	24/16	40.00 - 42.00	13/19/15/16	34	48				Similar to above.	G#246293 A-4, ML WC=15.9%
	R1	60/57	42.10 - 47.10	RQD = 60%			NQ-2	59.10		(42.10) Top of Bedrock at Elev. 59.1' R1:Bedrock: Grey, fine-grained metamorphic SCHIST, moderately hard, slightly weathered, steep angle joints moderately close, open and discolored to silt infilled, one silt seam 1 cm thick at 42.4', low angle joints moderately close, open and discolored to slightly weathered, zones of probable lost recovery 42.1-42.6' and 46.0', noted drill action change probably associated with moderately to highly weathered zone. [Vassalboro Formation] Rock Mass Quality: Fair R1:Core Times (min:sec) 42.1-43.1' (4:05) 43.1-44.1' (3:09) 44.1-45.1' (2:30) 45.1-46.1' (2:30) 46.1-47.1' (2:00) 95% Recovery	
45											
	R2	60/58	47.10 - 52.10	RQD = 73%				54.10		(47.10) R2:Bedrock: Same rock type, low angle joints moderately close, open, silt infilled. Rock Quality Mass: Fair R2:Core Times (min:sec) 47.1-48.1' (2:30) 48.1-49.1' (2:43) 49.1-50.1' (1:52) 50.1-51.1' (2:00) 51.1-52.1' (2:43) 97% Recovery	
50											
								49.10		(52.10) Bottom of Exploration at 52.10 feet below ground surface.	
55											
60											
65											
70											
75											

Remarks:

Water depth may not represent actual depth.

Stratification lines represent approximate boundaries between soil types; transitions may be gradual.

* Water level readings have been made at times and under conditions stated. Groundwater fluctuations may occur due to conditions other than those present at the time measurements were made.

Page 1 of 1

Boring No.: BB-BGWS-102

STATE OF MAINE
DEPARTMENT OF TRANSPORTATION

BH-1668(700)X

BRIDGE PLANS

BRIDGE NO. 3365

PIN 16687.00

		BY	DATE
PROJ. MANAGER	Steve Bodge		
DESIGN-DETAILED	M.MOREAU	T.WHITE	NOV 2009
CHECKED-REVIEWED	-----	-----	-----
DESIGN2-DETAILED2	-----	-----	-----
DESIGN3-DETAILED3	-----	-----	-----
REVISIONS 1	-----		-----
REVISIONS 2	-----		-----
REVISIONS 3	-----		-----
REVISIONS 4	-----		-----
FIELD CHANGES	-----		-----

SIGNATURE

P.E. NUMBER

DATE

JENKINS BRIDGE
GREAT WORKS STREAM
BRADLEY PENOBSCOT COUNTY

BORING LOGS

SHEET NUMBER

5

OF 18

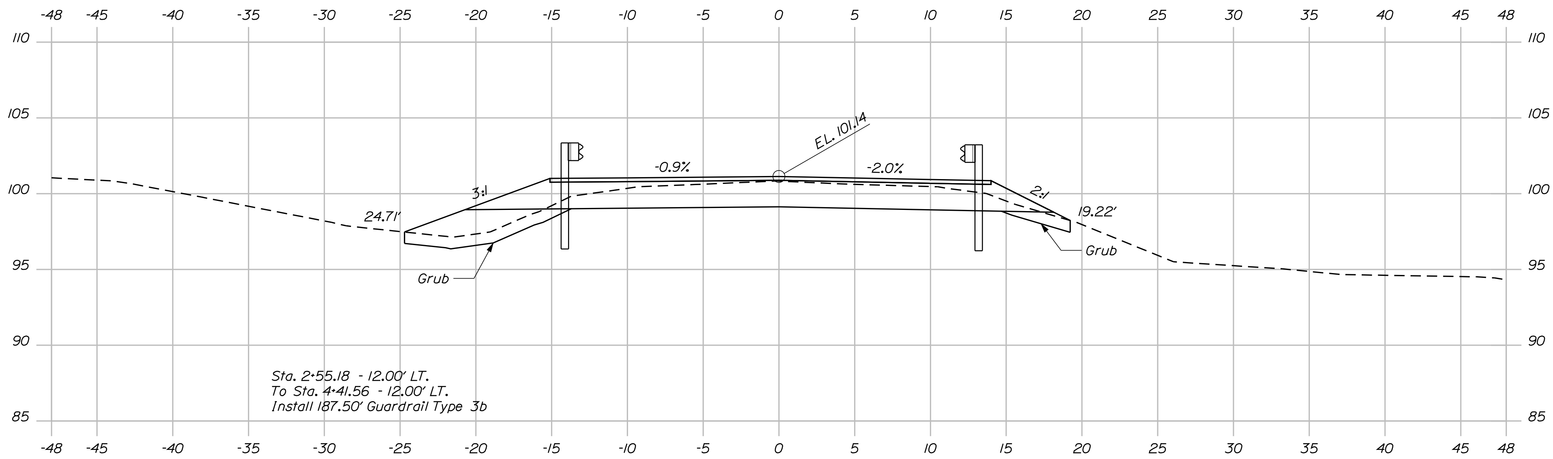

Sta. 2+41.02 - 22.31' LT.
To Sta. 2+55.18 - 12.00' LT.
Install 25.00' Guardrail Type 3b @ 15' Radius & Terminal End
Overlap W-Beam Between Middle Two Posts

2+50.00

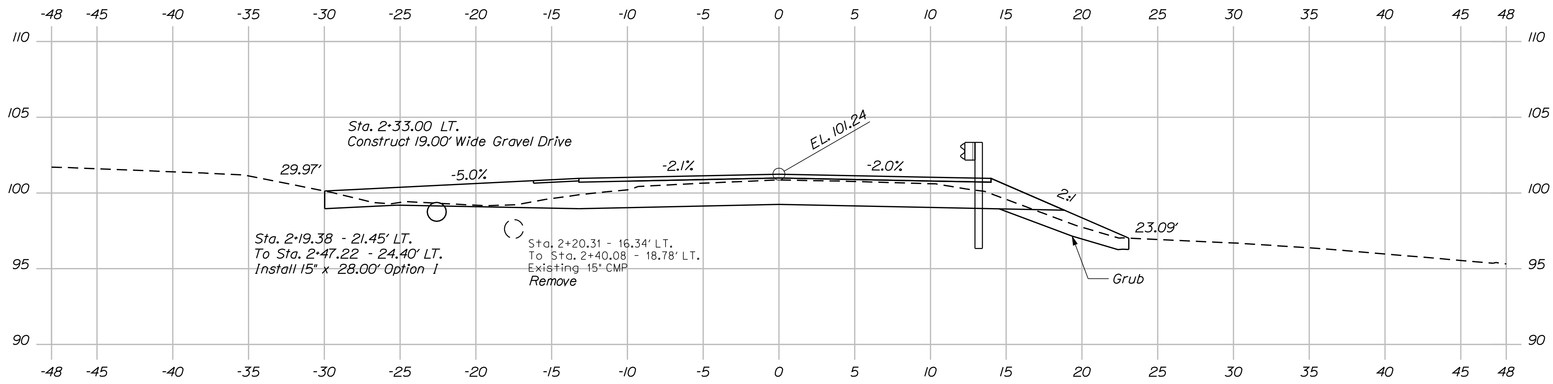

2+30.00

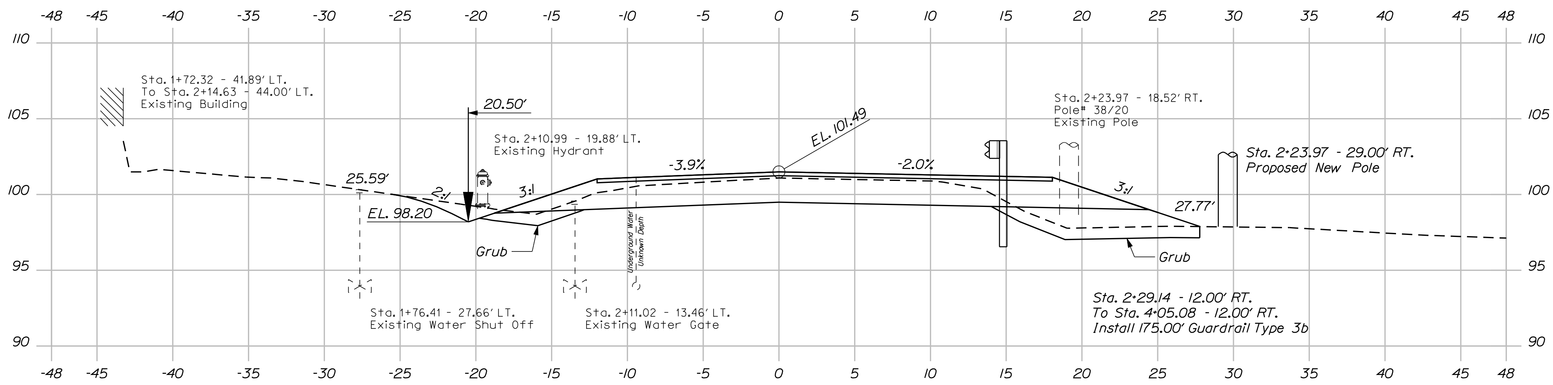

2+00.00
End Transition - Begin Project Sta. 2+00.00

Sta. 1+92.28 - 16.54' RT.
To Sta. 2+29.14 - 12.00' RT.
Low Volume Guardrail End

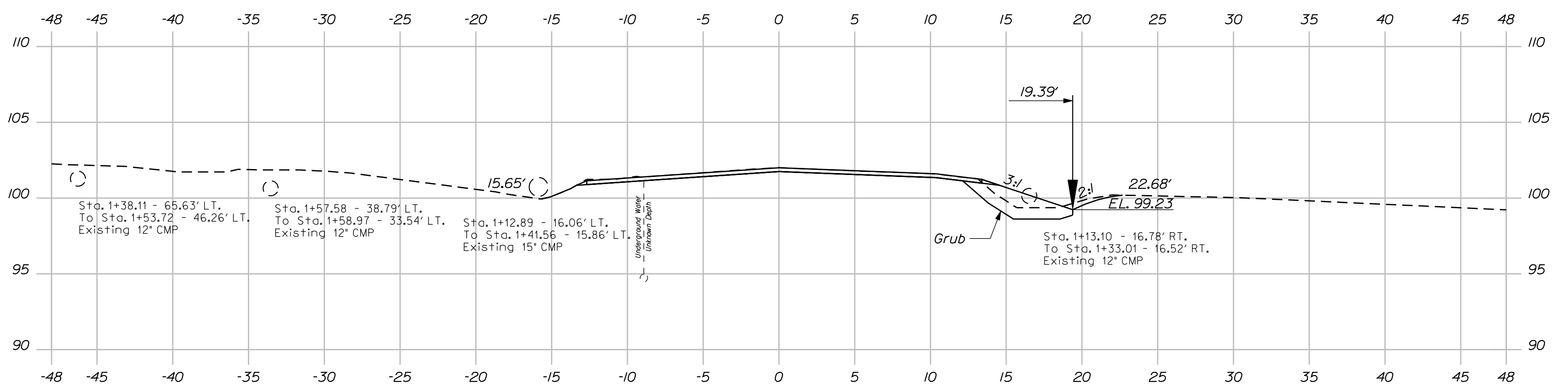

1+50.00
Begin Transition - Match Existing Sta. 1+50.00

Sta. 1+35.06 RT.
To Sta. 1+50.00 RT.
Widen Shoulder for
Low Volume Guardrail
End

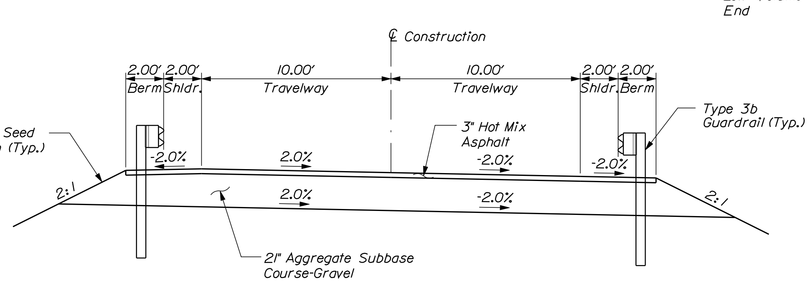

APPROACH DESIGN SECTION

SEA CONSULTANTS INC.
Scientists/Engineers/Architects

Sta. 1+50.00 to Sta. 2+50.00

SHEET NUMBER 6 OF 18

JENKINS BRIDGE
GREAT WORKS STREAM
BRADLEY PENOBSCOT COUNTY

CROSS SECTIONS

PROJ. MANAGER	N. BENOIT	BY	DATE
DESIGN-DETAILED	K. WOOD	K. CONSTANZER	
CHECKED-REVIEWED	K. WOOD	P. HETHERLY	4\12\10
DESIGN2-DETAILED2			
DESIGN3-DETAILED3			
REVISIONS 1			
REVISIONS 2			
REVISIONS 3			
REVISIONS 4			
FIELD CHANGES			

SIGNATURE
P.E. NUMBER
DATE

STATE OF MAINE
DEPARTMENT OF TRANSPORTATION
BH-1668(700)X
PIN 16687.00
BRIDGE NO. 3365
BRIDGE PLANS

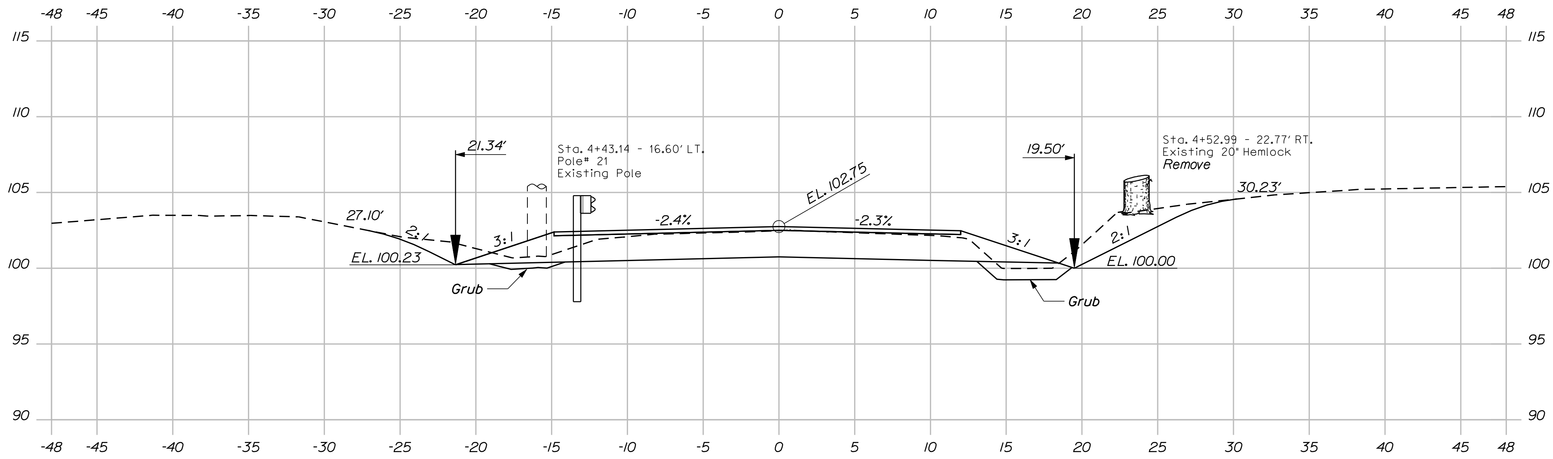

Sta. 4+41.56 - 12.00' LT.
To Sta. 4+78.11 - 16.95' LT.
Low Volume Guardrail End

4+50.00
End Project - Begin Transition Sta. 4+50.00

Sta. 4+05.08 - 12.00' RT.
To Sta. 4+30.23 - 12.00' RT.
Install GR 350 ET Plus Terminal

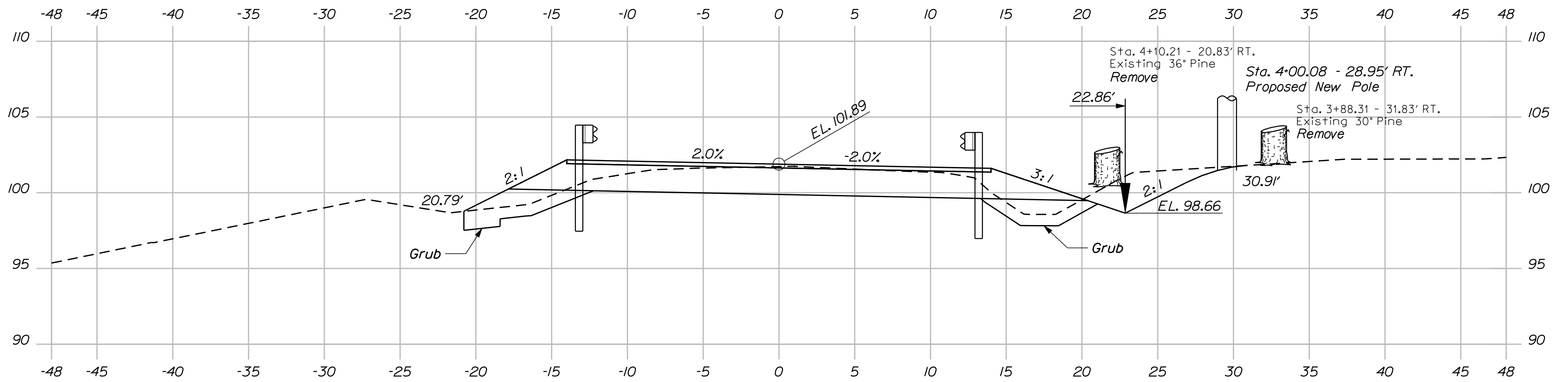

4+00.00

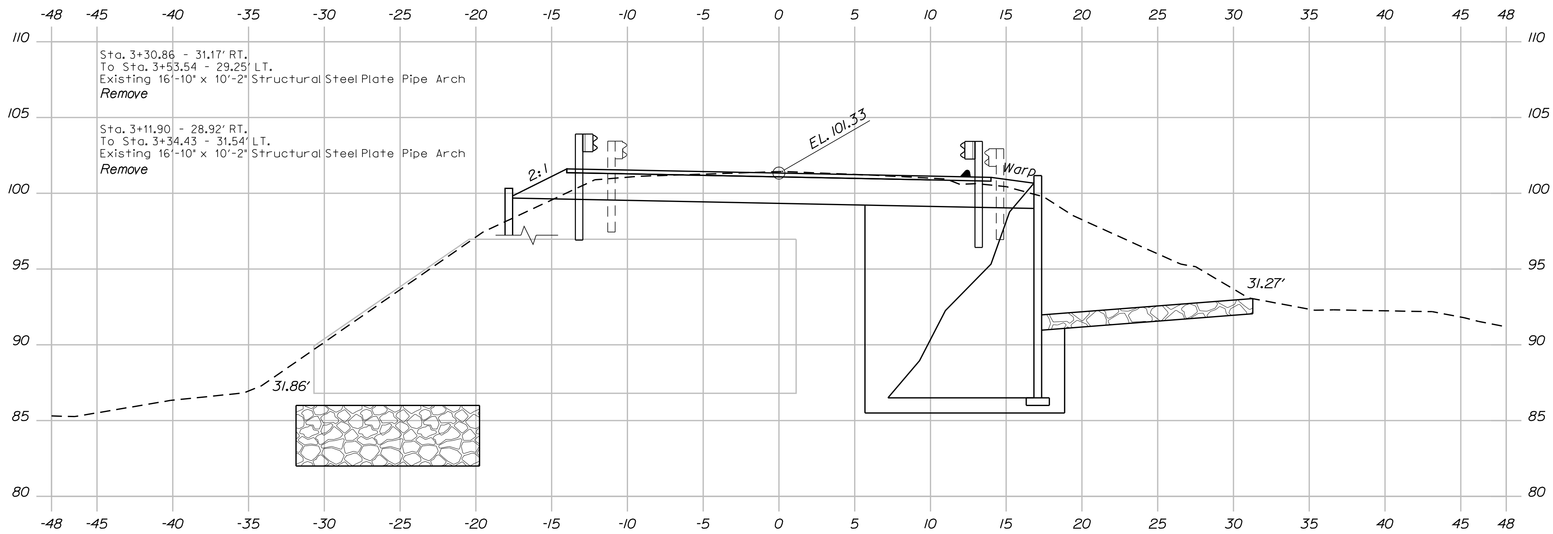

3+50.00

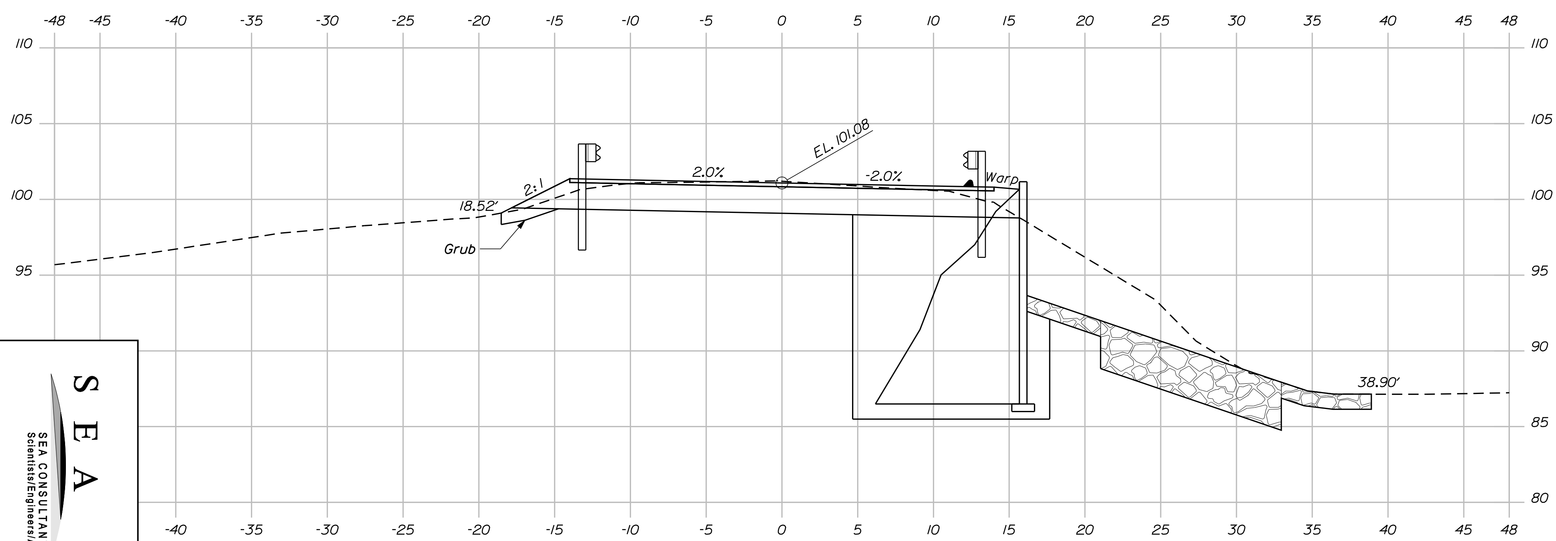

3+00.00

Sta. 2+73.70 - 12.00' RT.
To Sta. 3+60.00 - 12.00' RT.
Install 85.78' Curb Type 3 Mold 2

Sta. 2+73.70 - 14.00' RT.
Install Riprap Downspout

SEA CONSULTANTS INC.
Scientists/Engineers/Architects

SHEET NUMBER 7 OF 18

JENKINS BRIDGE
GREAT WORKS STREAM
BRADLEY PENOBSCOT COUNTY

CROSS SECTIONS

PROJ. MANAGER	N. BENOIT	BY	DATE
DESIGN-DETAILED	K. WOOD	K. CONSTANZER	
CHECKED-REVIEWED	K. WOOD	P. HETHERLY	4\12\10
DESIGN2-DETAILED2			
DESIGN3-DETAILED3			
REVISIONS 1			
REVISIONS 2			
REVISIONS 3			
REVISIONS 4			
FIELD CHANGES			

SIGNATURE
P.E. NUMBER
DATE

STATE OF MAINE
DEPARTMENT OF TRANSPORTATION
BH-1668(700)X
BRIDGE NO. 3365
PIN 16687.00
BRIDGE PLANS

Sta. 3+00.00 to Sta. 4+50.00

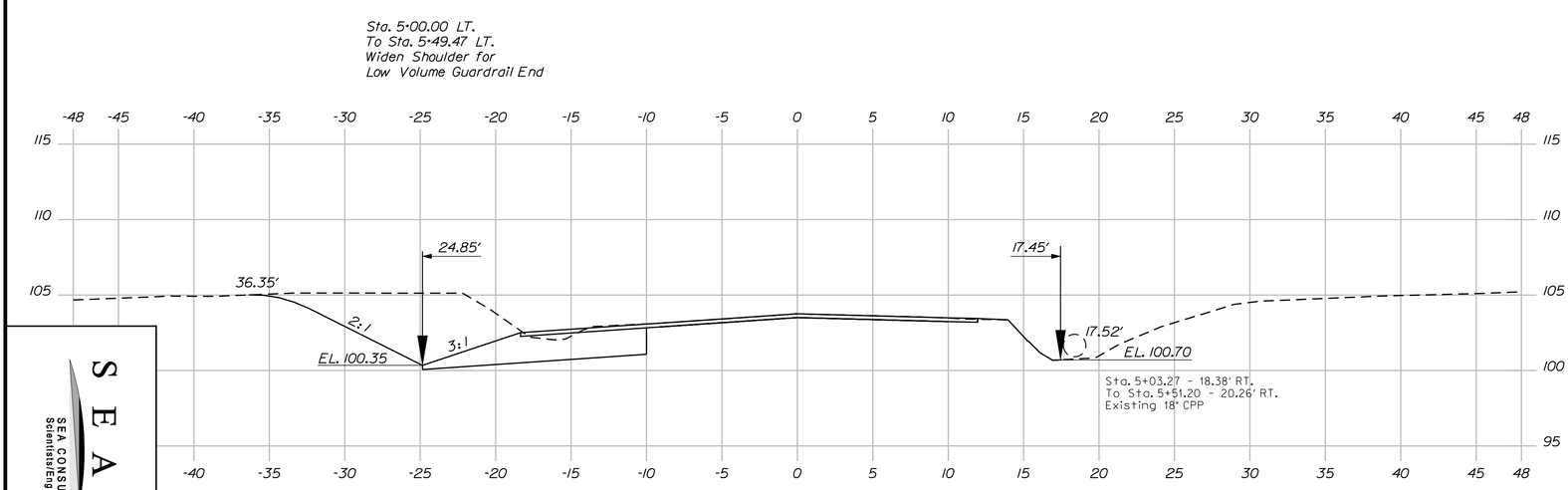

5+00.00
End Transition - Match Existing Sta. 5+00.00

SEA CONSULTANTS INC.
Scientists/Engineers/Architects

Sta. 5+00.00 to Sta. 5+00.00

SHEET NUMBER 8 OF 18

JENKINS BRIDGE
GREAT WORKS STREAM
BRADLEY PENOBSCOT COUNTY

CROSS SECTIONS

PROJ. MANAGER	N. BENOIT	BY	DATE
DESIGN-DETAILED	K. WOOD	K. CONSTANZER	
CHECKED-REVIEWED	K. WOOD	P. HETHERLY	4\12\10
DESIGN2-DETAILED2			
DESIGN3-DETAILED3			
REVISIONS 1			
REVISIONS 2			
REVISIONS 3			
REVISIONS 4			
FIELD CHANGES			

SIGNATURE
P.E. NUMBER
DATE

STATE OF MAINE
DEPARTMENT OF TRANSPORTATION
BH-1668(700)X
BRIDGE NO. 3365 PIN 16687.00 BRIDGE PLANS

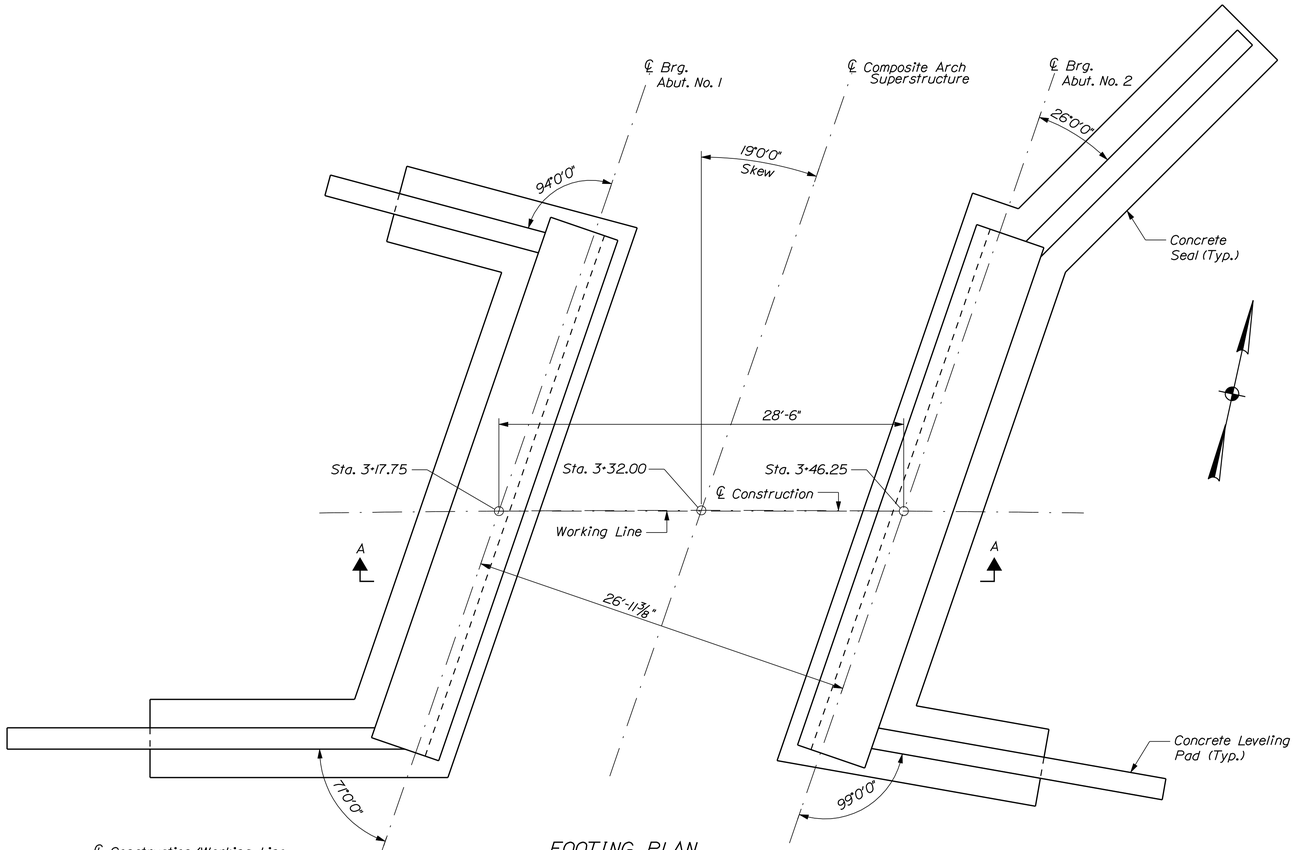

FOOTING PLAN

Note: Arches Not Shown for Clarity

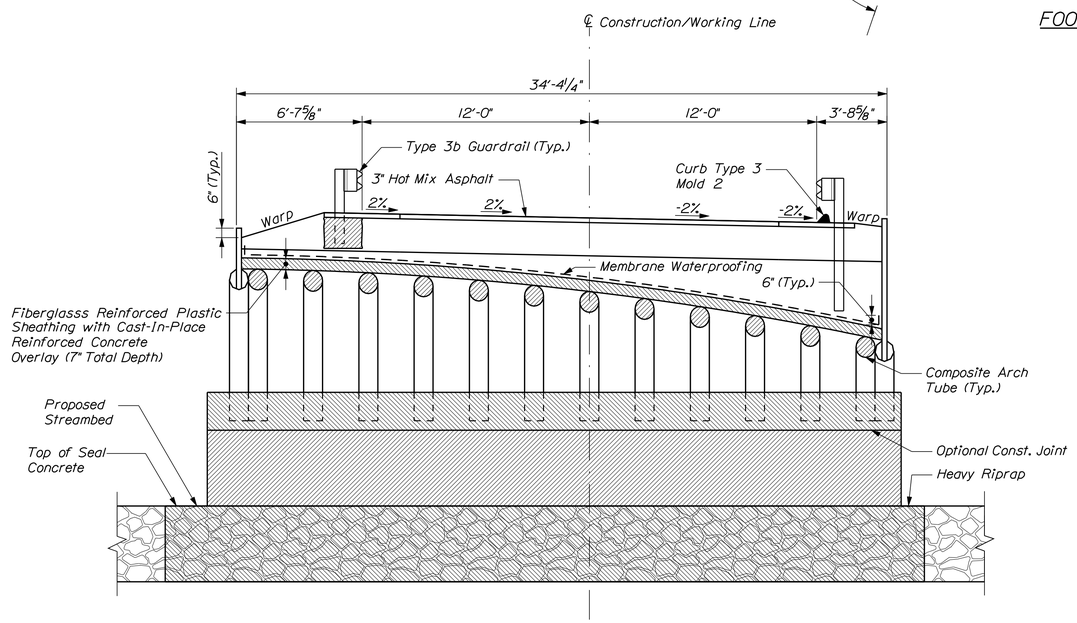

TRANSVERSE SECTION

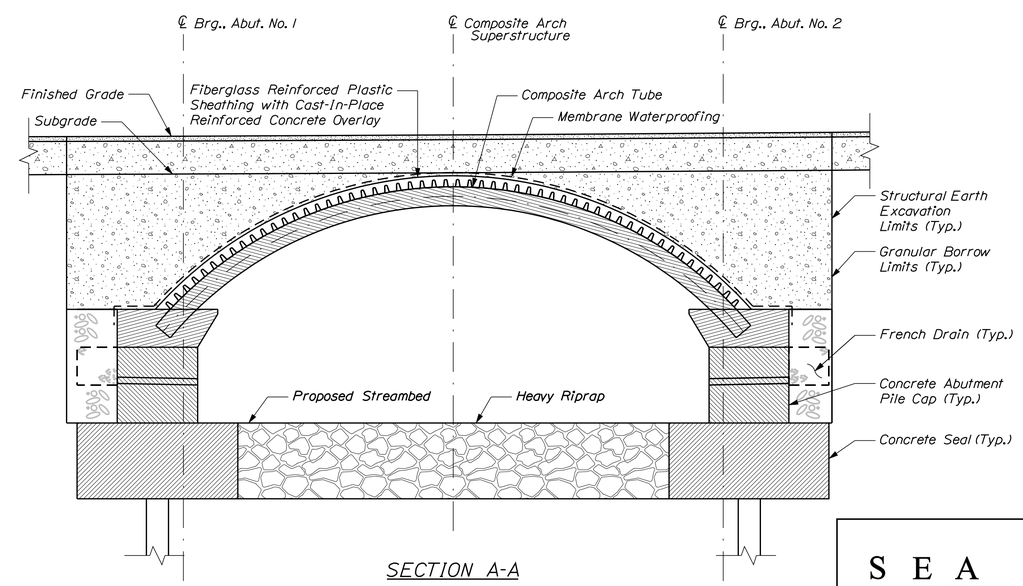

SECTION A-A

STATE OF MAINE
DEPARTMENT OF TRANSPORTATION

BH-1668(700)X

PIN 16687.00

BRIDGE NO. 3365

BRIDGE PLANS

PROJ. MANAGER	N. BENOIT	BY	DATE
DESIGN-DETAILED	K. WOOD	K. CONSTANZER	
CHECKED-REVIEWED	K. WOOD	P. HETHERLY	4\12\10
DESIGN2-DETAILED2			
DESIGN3-DETAILED3			
REVISIONS 1			
REVISIONS 2			
REVISIONS 3			
REVISIONS 4			
FIELD CHANGES			

SIGNATURE

P.E. NUMBER

DATE

JENKINS BRIDGE
GREAT WORKS STREAM
BRADLEY PENOBSCOT COUNTY

COMPOSITE ARCH
PLAN AND SECTIONS

SEA
SEA CONSULTANTS INC.
Scientists/Engineers/Architects

SHEET NUMBER
9
OF 18

Filename: ...\009_Composite Arch Plan.dgn Division: BRIDGE Username: kris.constanzer Date:4/22/2010

SEAL COFFERDAM NOTES

1. When sheet piling is used for seal cofferdams, appropriate rolled corners shall be used, and the inside face of the sheet piling shall be at or outside of the seal concrete dimensions shown.

2. The seal concrete placement dimensions shown represent the minimum seal size necessary to meet design requirements and are not based on the use of any particular sheet pile section.

3. The horizontal pay limit for seal concrete will be to the dimensions shown on the plans. No additional payment will be made for concrete placed outside these limits.

4. The depth of the seal is set for a water elevation of 91.5. If the water elevation at the time of construction is higher, the depth of the seal shall be adjusted.

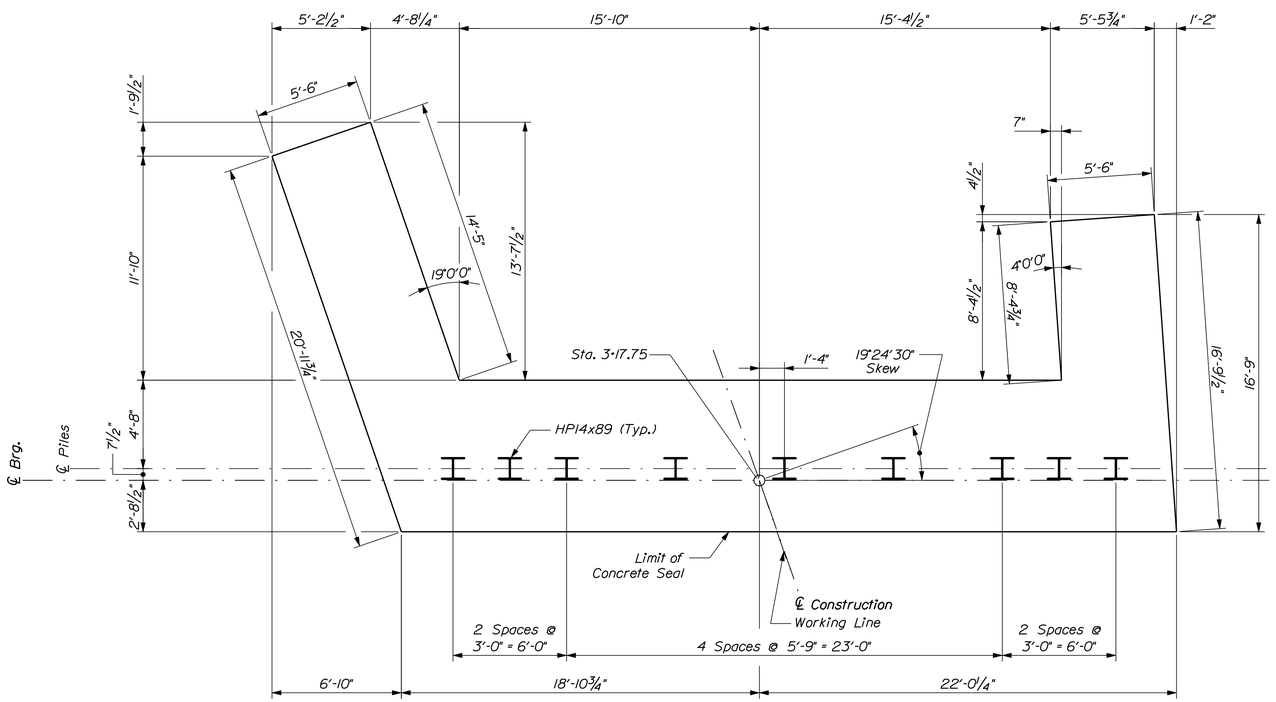

ABUTMENT NO. 1 SEAL AND PILE PLAN

STATE OF MAINE
DEPARTMENT OF TRANSPORTATION

BH-1668(700)X

PIN 16687.00

BRIDGE NO. 3365

BRIDGE PLANS

PROJ. MANAGER	N. BENOIT	BY	DATE
DESIGN-DETAILED	K. WOOD	K. CONSTANZER	
CHECKED-REVIEWED	K. WOOD	P. HETHERLY	4\12\10
DESIGN2-DETAILED2			
DESIGN3-DETAILED3			
REVISIONS 1			
REVISIONS 2			
REVISIONS 3			
REVISIONS 4			
FIELD CHANGES			

SIGNATURE

P.E. NUMBER

DATE

JENKINS BRIDGE
GREAT WORKS STREAM
BRADLEY PENOBSCOT COUNTY

ABUTMENT NO. 1
SEAL AND PILE LAYOUT

SEA
SEA CONSULTANTS INC.
Scientists/Engineers/Architects

SHEET NUMBER
10
OF 18

Filename: ...\010_Abutment1_Seal and Pile.dgn Division: BRIDGE Username: kris.constanzer Date:4/15/2010

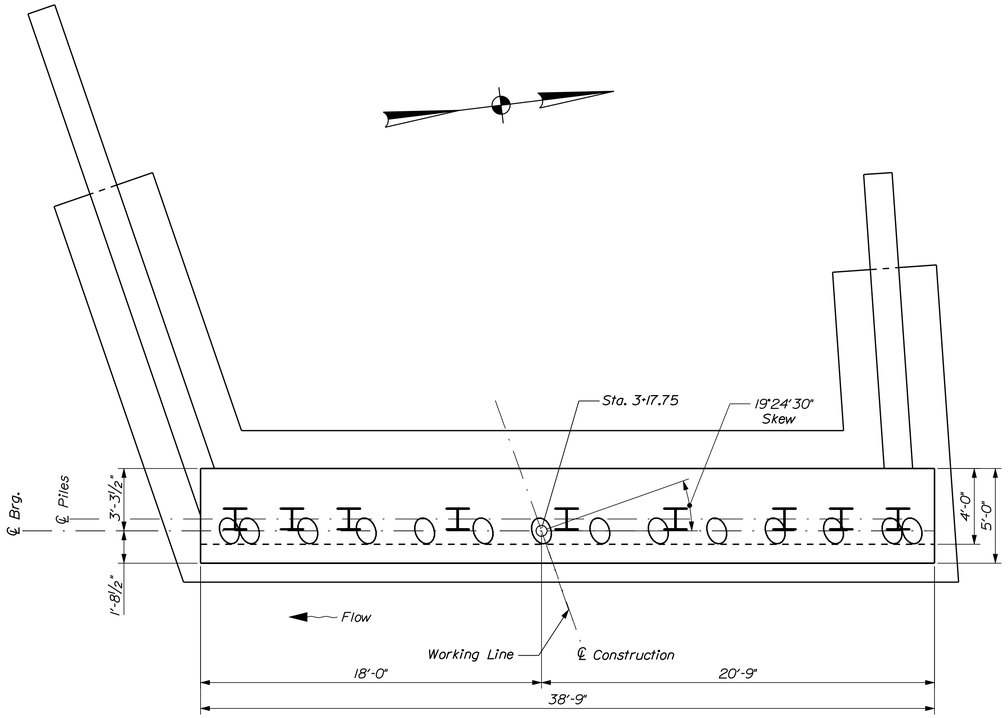

ABUTMENT NO. 1 PILE CAP PLAN

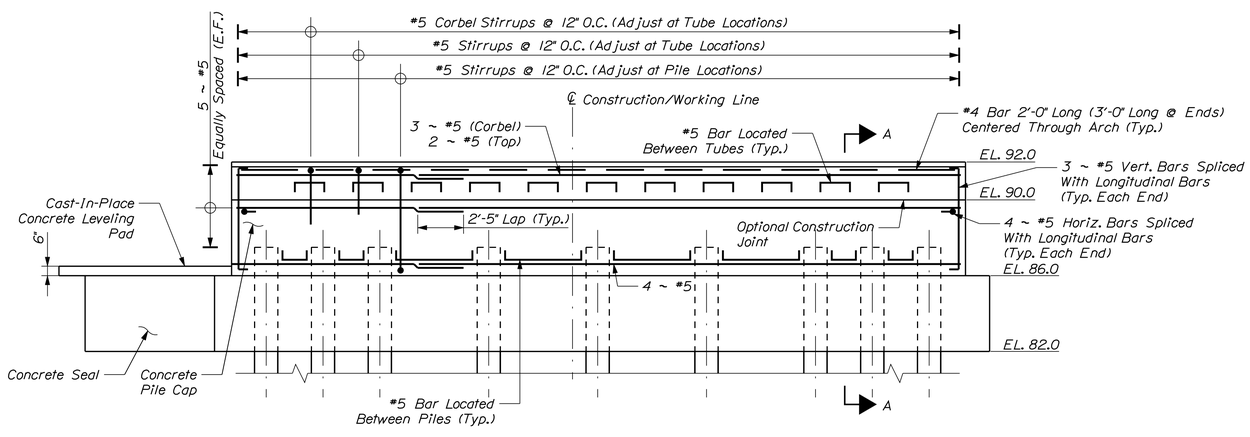

ABUTMENT NO. 1 PILE CAP ELEVATION

ABUTMENT NOTES

1. Structural Earth Excavation, Abutments and Retaining Walls, required more than 12 inches below the bottom of the structure, will be paid for in accordance with Standard Specifications Section 206, Structural Excavation.

2. Reinforcing steel shall have a minimum concrete cover of 3 inches unless otherwise noted.

3. Place 4-in. diameter drains in the Abutment Pile Cap at 10-ft maximum spacing. The exact location will be determined by the Resident.

4. Cover joints where waterstops are not required in accordance with Standard Details Section 502.

5. Construct French Drains behind the Abutment Pile Cap in accordance with Standard Specifications Section 512, French Drains.

6. Abutment Pile Caps shall be backfilled with Granular Borrow. Pay limits will be the Structural Excavation limits or Existing Bridge Removal limits, as applicable.

7. Reinforcing steel is designed with standard hook lengths, and typical 3 inch clear to all faces, tubes and piles.

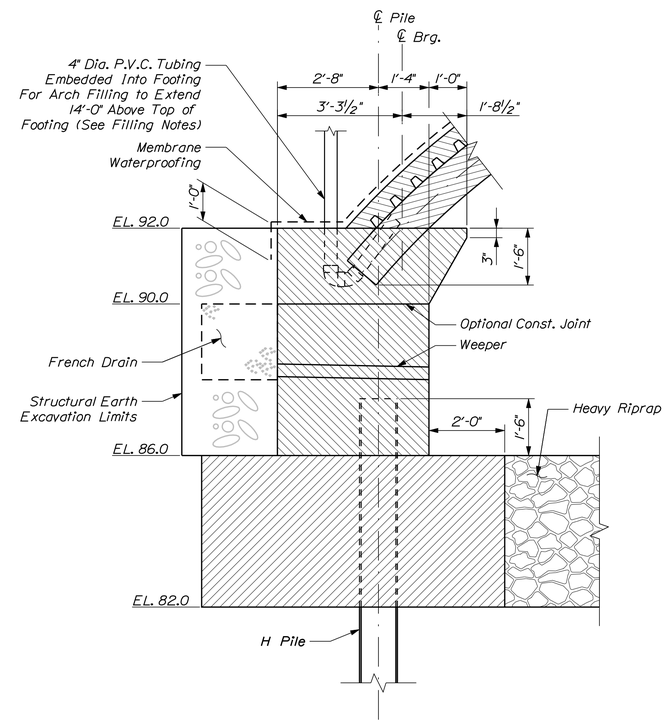

ABUTMENT SECTION
SECTION A-A

Note:
See Sheet 13 for reinforcing steel section.

STATE OF MAINE
DEPARTMENT OF TRANSPORTATION

BH-1668(700)X

PIN 16687.00

BRIDGE NO. 3365

BRIDGE PLANS

PROJ. MANAGER	N. BENOIT		
DESIGN-DETAILED	K. WOOD	K. CONSTANZER	4\12\10
CHECKED-REVIEWED	K. WOOD	P. HETHERLY	
DESIGN2-DETAILED2			
DESIGN3-DETAILED3			
REVISIONS 1			
REVISIONS 2			
REVISIONS 3			
REVISIONS 4			
FIELD CHANGES			

SIGNATURE

P.E. NUMBER

DATE

JENKINS BRIDGE
GREAT WORKS STREAM
BRADLEY PENOBSCOT COUNTY

ABUTMENT NO. 1 DETAILS

SEA
SEA CONSULTANTS INC.
Scientists/Engineers/Architects

SHEET NUMBER
11
OF 18

Filename: ...\MSTA\011_Abutment1_Details.dgn Division: BRIDGE Username: kris.constanzer Date:4/22/2010

PILE NOTES

1. The maximum factored pile load is 164 kips.

2. H-pile material shall be ASTM A 572, Grade 50.

3. Pipe pile material shall be ASTM A 252, Grade 2 or 3.

4. Estimate of piles required:

   Abutment No. 1: 9 ~ HP 14x89 @ 30 feet
   Abutment No. 2: 9 ~ HP 14x89 @ 29 feet

5. All piles shall be equipped with a pile tip in accordance with Standard Specifications Section 501.10, Prefabricated Pile Tips.

6. The Contractor shall perform and submit a wave equation analysis for review and acceptance by the Resident. The maximum allowable driving stress is 0.90 times Fy. The submittal analyses shall include the proposed stopping criteria based on the wave equation analysis and the proposed driving system. The stopping criteria shall include the blows per inch and the number of 1-in. intervals at which pile installation may be terminated. The cost of performing the wave equation analysis will be considered incidental to Item No. 501.92, Pile Driving Equipment Mobilization.

7. The Contractor shall perform two dynamic load test(s) to confirm the ultimate capacity of the piles. The required nominal resistance for the pile is the factored axial pile load divided by a resistance factor of 0.65 per LRFD Specifications. The dynamic test shall be performed on the first production pile driven.

8. Piles shall be driven to bedrock.

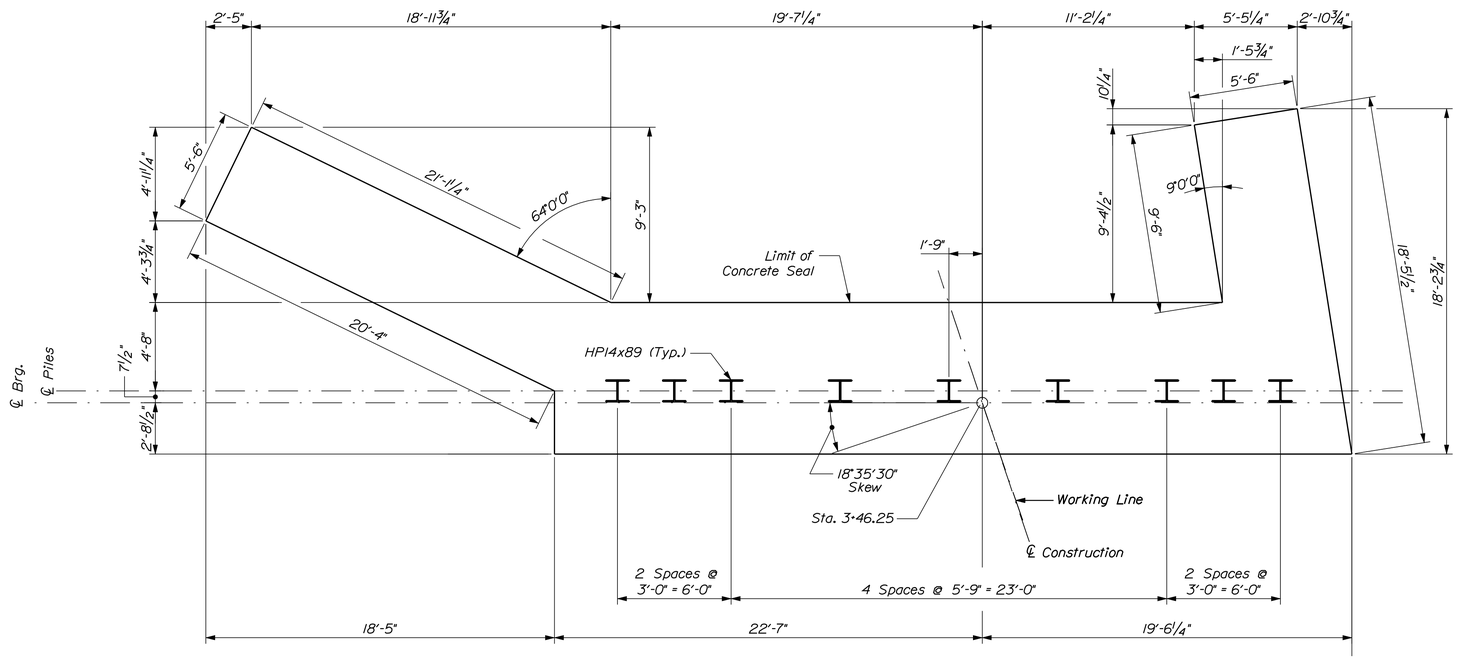

ABUTMENT NO. 2 SEAL AND PILE PLAN

STATE OF MAINE
DEPARTMENT OF TRANSPORTATION

BH-1668(700)X

PIN 16687.00

BRIDGE NO. 3365

BRIDGE PLANS

PROJ. MANAGER	N. BENOIT	BY	DATE
DESIGN-DETAILED	K. WOOD	K. CONSTANZER	
CHECKED-REVIEWED	K. WOOD	P. HETHERLY	4\12\10
DESIGN2-DETAILED2			
DESIGN3-DETAILED3			
REVISIONS 1			
REVISIONS 2			
REVISIONS 3			
REVISIONS 4			
FIELD CHANGES			

SIGNATURE

P.E. NUMBER

DATE

JENKINS BRIDGE
GREAT WORKS STREAM
BRADLEY PENOBSCOT COUNTY

ABUTMENT NO. 2
SEAL AND PILE LAYOUT

SEA
SEA CONSULTANTS INC.
Scientists/Engineers/Architects

SHEET NUMBER
12
OF 18

Filename: ...\012_Abutment2_Seal and Pile.dgn Division: BRIDGE Username: kris.constanzer Date:4/15/2010

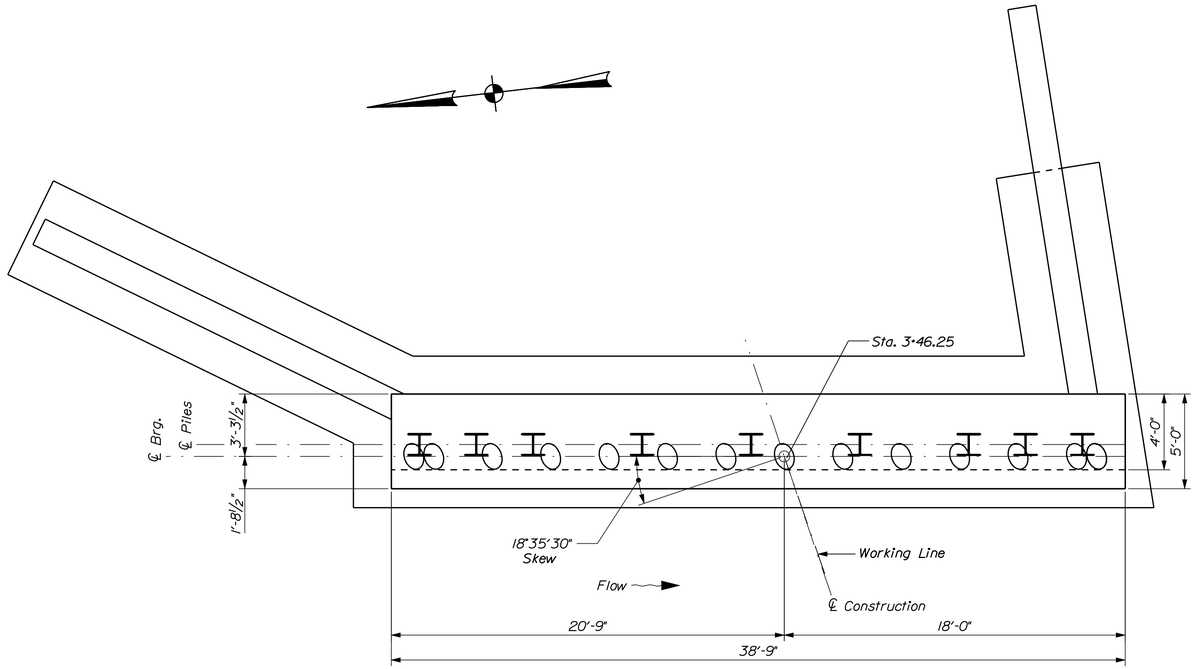

ABUTMENT NO. 2 PILE CAP PLAN

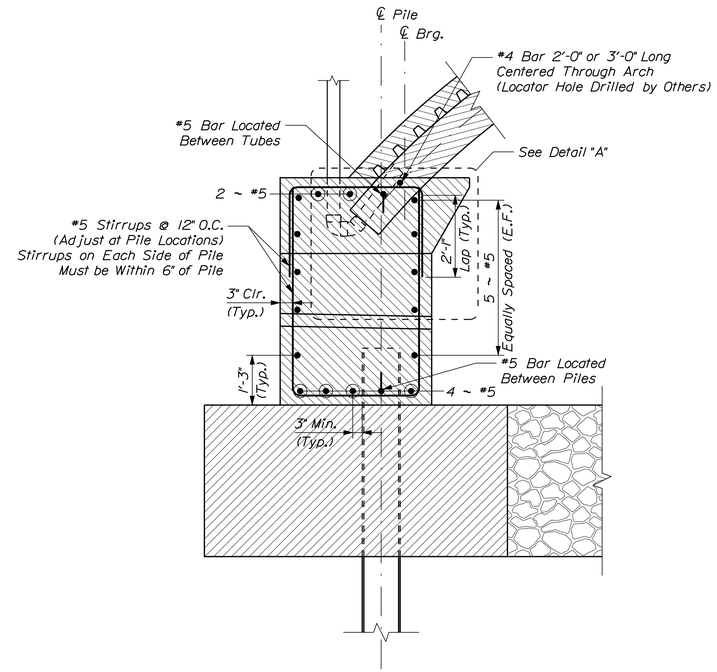

PILE CAP REINFORCING
LAYOUT DETAIL
(Typical Both Abutments)

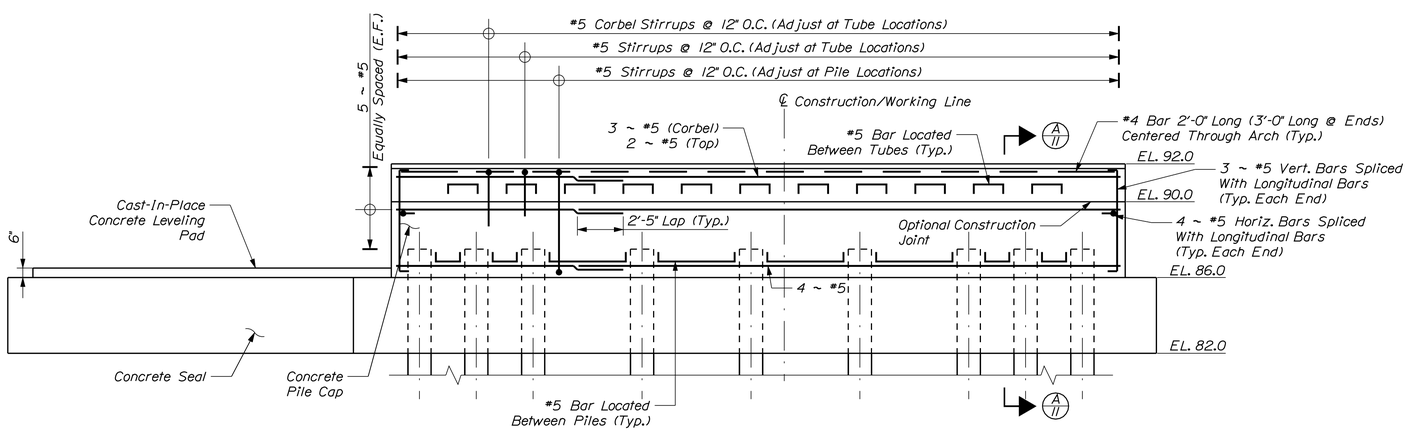

ABUTMENT NO. 2 PILE CAP ELEVATION

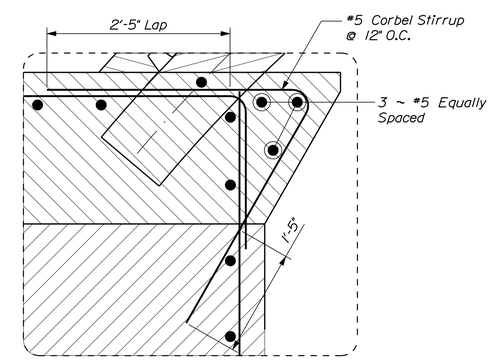

DETAIL "A"

STATE OF MAINE
DEPARTMENT OF TRANSPORTATION

BH-1668(700)X

PIN 16687.00

BRIDGE NO. 3365

BRIDGE PLANS

PROJ. MANAGER	N. BENOIT	BY	DATE
DESIGN-DETAILED	K. WOOD	K. CONSTANZER	
CHECKED-REVIEWED	K. WOOD	P. HETHERLY	4\12\10
DESIGN2-DETAILED2			
DESIGN3-DETAILED3			
REVISIONS 1			
REVISIONS 2			
REVISIONS 3			
REVISIONS 4			
FIELD CHANGES			

SIGNATURE

P.E. NUMBER

DATE

JENKINS BRIDGE
GREAT WORKS STREAM
BRADLEY PENOBSCOT COUNTY

ABUTMENT NO. 2 DETAILS

SEA
SEA CONSULTANTS INC.
Scientists/Engineers/Architects

SHEET NUMBER
13
OF 18

Filename: ...\MSTA\013_Abutment2_Details.dgn Division: BRIDGE Username: kris.constanzer Date:4/22/2010

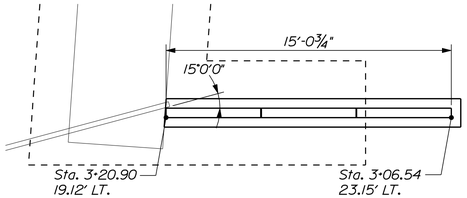

ABUTMENT NO. 1
NORTH WING PLAN

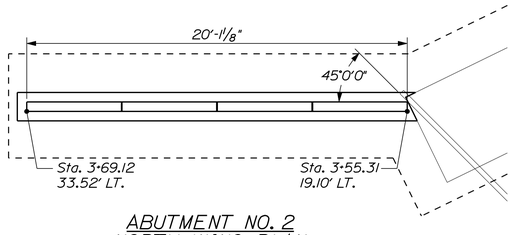

ABUTMENT NO. 2
NORTH WING PLAN

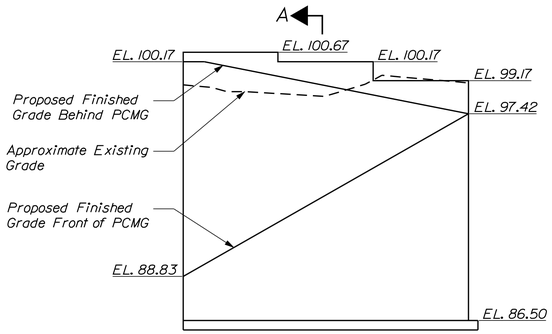

ABUTMENT NO. 1
NORTH WING ELEVATION

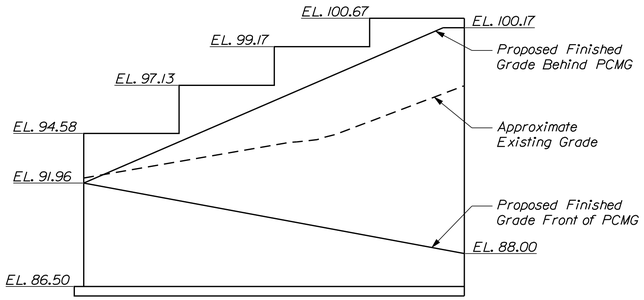

ABUTMENT NO. 2
NORTH WING ELEVATION

PREFABRICATED CONCRETE MODULAR GRAVITY WALL NOTES

1. The Contractor shall provide a Prefabricated Concrete Modular Gravity (PCMG) Wall in accordance with Special Provision Section 635. The PCMG Wall shall be designed and stamped by a Licensed Professional Engineer and the design shall be submitted to the Resident for review. Plan details are shown for estimating purposes only.

2. The precast units shall be one of the following, or equal:

"T-Wall" as manufactured by a licensed manufacturer of Neel Company

"DoubleWal" as manufactured by a licensed manufacturer of DoubleWal Corp., Plainville, Connecticut.

3. For the strength limit state, the factored bearing pressure for PCMG Walls shall not exceed the factored bearing resistance of 5 ksf for wall system bases less than 8 feet wide and 6.5 ksf for bases 10 to 12 feet wide. The factored bearing pressure for the service limit state shall not exceed the factored bearing resistance of 6.0 ksf.

4. Cofferdams for the PCMG Wall installation will be included with Pay Item No. 511.07, Cofferdam - Abut. No. 1 or No. 2.

5. The PCMG Wall shall consist of concrete with a maximum permeability of 2000 coulombs and corrosion resistance reinforcing steel.

6. The PCMG Wall units shall contain a minimum of 5.5 gallons per cubic yard of calcium nitrite solution or equivalent corrosion inhibitor approved by the Resident.

7. High water elevation for hydrostatic design condition is 91.6 ft.

8. A 1'-0" wide drainage geotextile shall be secured to the back face of the wall units at all joints up to the highest expected water level. Payment will be considered incidental to related contract items.

9. The PCMG Wall shall be constructed with a 1.5 foot thick layer of crushed stone (MaineDOT 703.31) placed vertically along the inside face of the wall units. The layer of crushed stone shall extend vertically from the bottom course of the wall units to the top course of the wall units. The crushed stone shall be separated from the surrounding backfill with erosion control geotextile (MaineDOT 722.03). A minimum of 1.5 feet of overlap is required between adjacent lengths of geotextile. Payment for crushed stone and erosion control geotextile shall be considered incidental to Pay Item 635.14.

10. Wall lengths shown are based on using 5'-0" units widths with ⅜" vertical gap widths between units.

11. Guardrail post spacing shall be adjusted within the wingwall limits to avoid the PCMG wall units. Adjusted guardrail post spacing shall not exceed the standard spacing of the specified guardrail type. Guardrail to be used within the limits of the wingwalls shall be pre-punched with holes spaced at one half the standard spacing of the specified guardrail type. All adjustments, including additional posts that are required, shall be incidental to item 606.17, guardrail Type 3b.

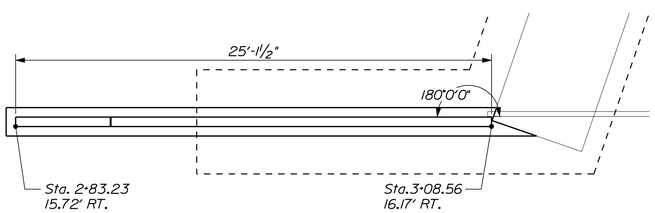

ABUTMENT NO. 1
SOUTH WING PLAN

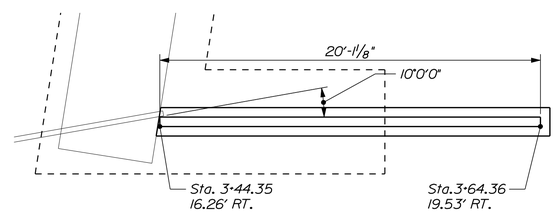

ABUTMENT NO. 2
SOUTH WING PLAN

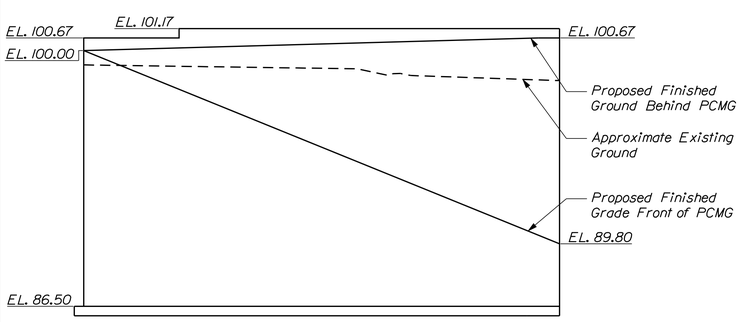

ABUTMENT NO. 1
SOUTH WING ELEVATION

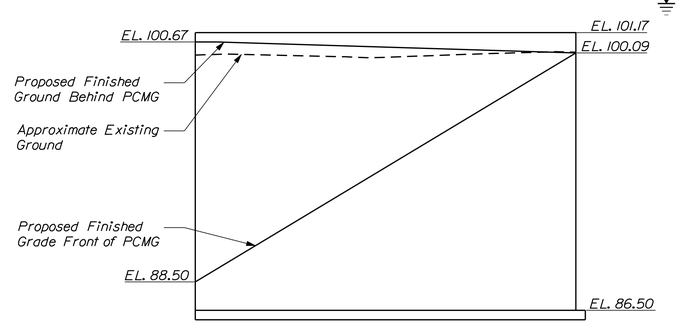

ABUTMENT NO. 2
SOUTH WING ELEVATION

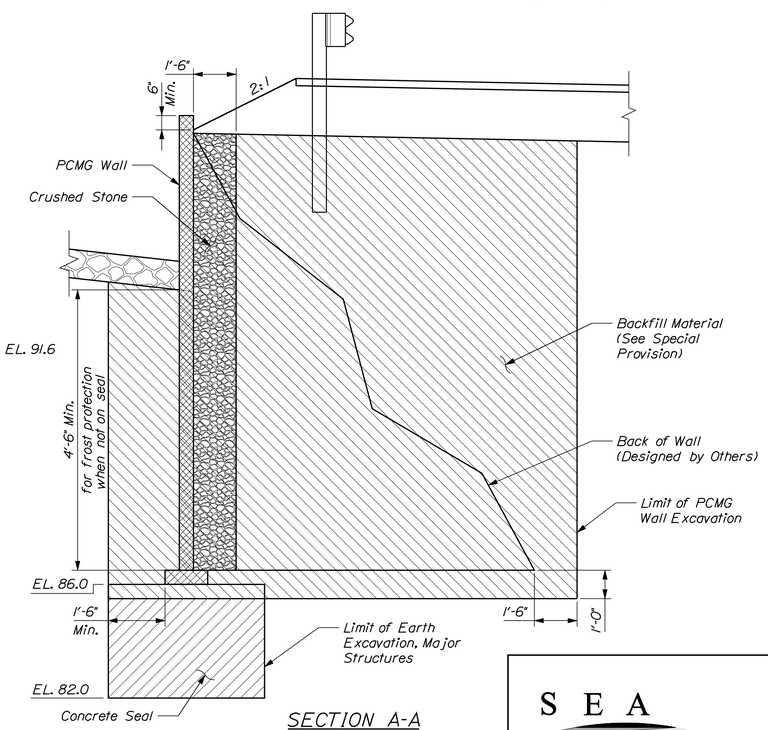

SECTION A-A

STATE OF MAINE
DEPARTMENT OF TRANSPORTATION

BH-1668(700)X

PIN 16687.00

BRIDGE NO. 3365

BRIDGE PLANS

	BY	DATE
PROJ. MANAGER	N. BENOIT	
DESIGN-DETAILED	K. WOOD	K. CONSTANZER
CHECKED-REVIEWED	K. WOOD	P. HETHERLY
DESIGN2-DETAILED2		4\12\10
DESIGN3-DETAILED3		
REVISIONS 1		
REVISIONS 2		
REVISIONS 3		
REVISIONS 4		
FIELD CHANGES		

SIGNATURE

P.E. NUMBER

DATE

JENKINS BRIDGE
GREAT WORKS STREAM
BRADLEY PENOBSCOT COUNTY

WINGWALL DETAILS

SEA
SEA CONSULTANTS INC.
Scientists/Engineers/Architects

SHEET NUMBER
14
OF 18

Filename: ...\BRIDGE\MSTA\014_Wingwalls.dgn Division: BRIDGE Username: kris.constanzer Date:4/22/2010

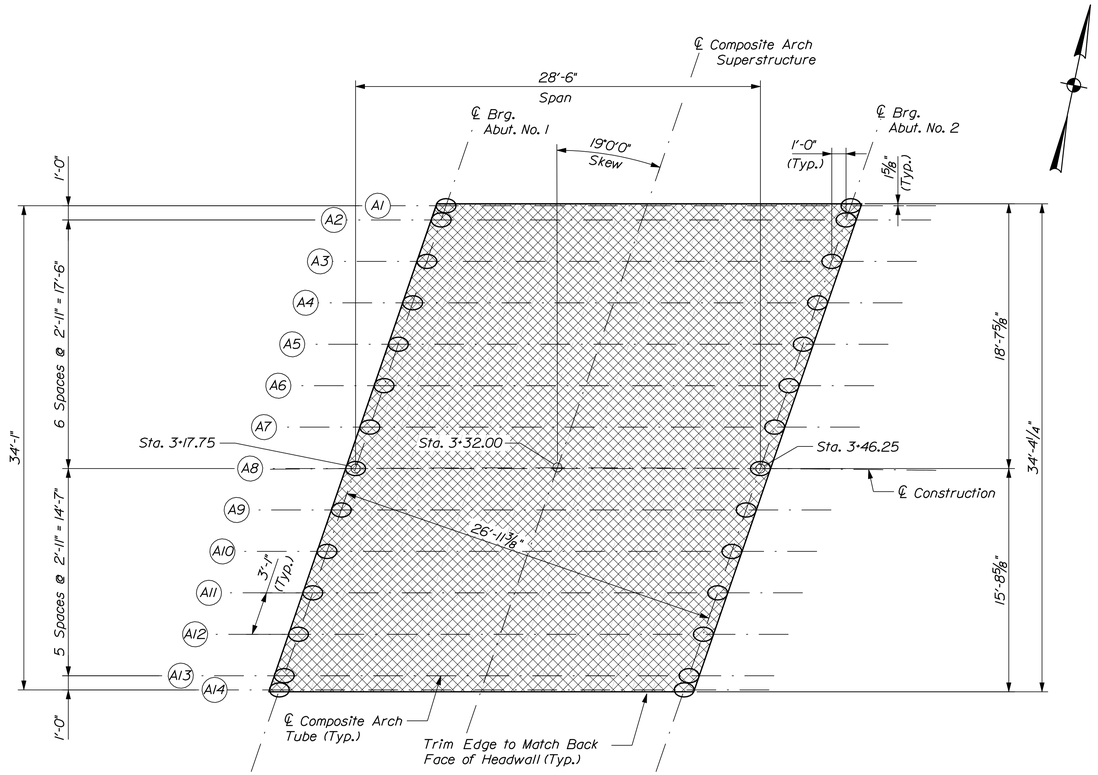

ARCH/SHEATHING PLAN

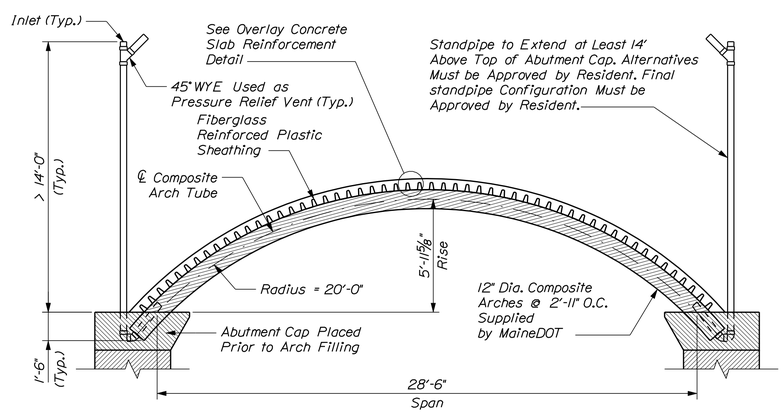

ARCH ELEVATION

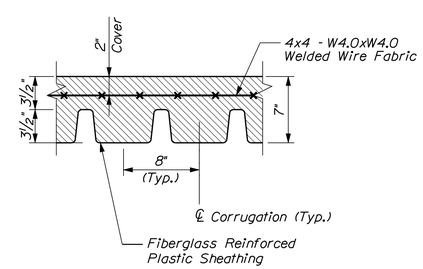

OVERLAY CONCRETE SLAB REINFORCEMENT DETAIL

COMPOSITE ARCH TUBE NOTES

1. The composite arch superstructure erection, handling, and assembly of arch units shall be in accordance with Special Provision 509.74. Composite Arch Superstructure Erection.

2. Riprap adjacent to the arch shall be carefully placed so as not to damage the arch or headwall.

ARCH CONCRETE PLACEMENT NOTES

1. Standpipe configuration to be approved by Resident prior to Abutment pile cap placement.

2. Arches shall be filled under the supervision of the Resident.

3. Standpipe shall not be removed until arch concrete has set a minimum of 8 hours.

FIBERGLASS REINFORCED PLASTIC SHEATHING NOTES

1. Fiberglass reinforced plastic sheathing shall be installed parallel to the centerline of bearings.

2. Fiberglass reinforced plastic sheathing shall be attached with fasteners at 8" (at ℄ of each corrugation bottom) along each arch.

3. See Special Provision 509 for additional Fiberglass Reinforced Plastic Sheathing and fastener requirements.

OVERLAY CONCRETE SLAB NOTES

1. Welded wire fabric shall be oriented parallel to the centerline of bearings.

2. Welded wire fabric shall be installed full length and width of overlay concrete slab. Trim edge of mesh to achieve 2" of cover.

3. Concrete overlay shall be paid for under item 502.41 Structural Concrete Superstructure Slab.

STATE OF MAINE
DEPARTMENT OF TRANSPORTATION

BH-1668(700)X

PIN 16687.00

BRIDGE NO. 3365

BRIDGE PLANS

PROJ. MANAGER	N. BENOIT			
DESIGN-DETAILED	K. WOOD	K. CONSTANZER		
CHECKED-REVIEWED	K. WOOD	P. HETHERLY	4\12\10	
DESIGN2-DETAILED2				
DESIGN3-DETAILED3				
REVISIONS 1				
REVISIONS 2				
REVISIONS 3				
REVISIONS 4				
FIELD CHANGES				

SIGNATURE

P.E. NUMBER

DATE

JENKINS BRIDGE
GREAT WORKS STREAM
BRADLEY PENOBSCOT COUNTY

COMPOSITE ARCH DETAILS

SEA
SEA CONSULTANTS INC.
Scientists/Engineers/Architects

SHEET NUMBER
15
OF 18

Filename: ...\MSTA\015_Framing Plan.dgn Division: BRIDGE Username: kris.constanzer Date:4/22/2010

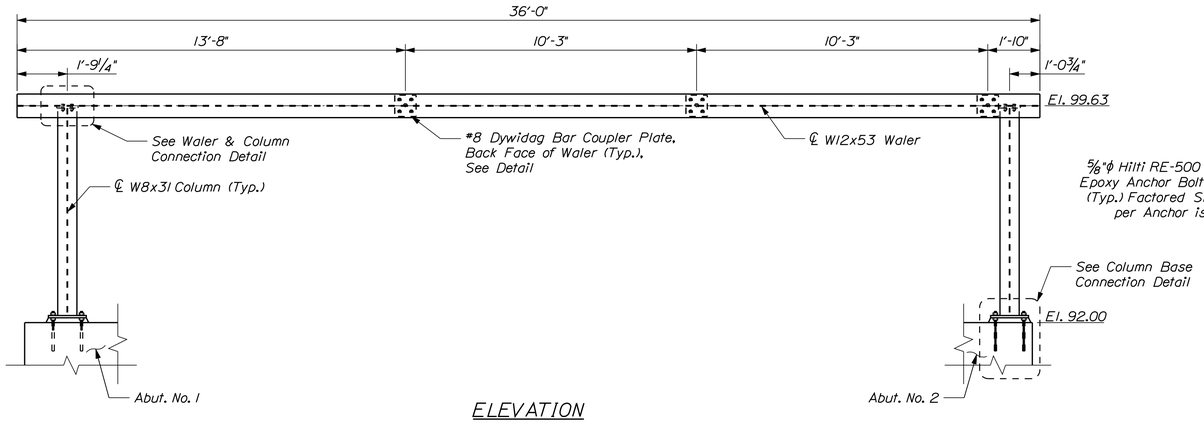

ELEVATION
(Downstream Shown, Upstream Opp. Hand)

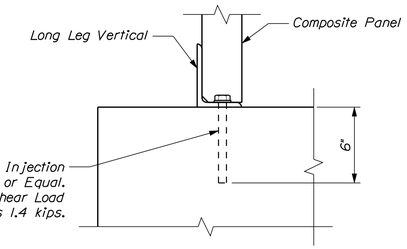

ABUTMENT HEADWALL SUPPORT BASE DETAIL

HEADWALL NOTES

1. Headwall shall comply with Special Provision 509 Composite Headwall and be paid for under 509.75.

2. The Contractor shall provide temporary bracing of the column until the ties are in place. Bracing plan shall be submitted to the Resident for review prior to erecting the column.

3. All hardware shall be galvanized in accordance with Special Provision 509.

4. Place 2" PVC sleeve over dywidag bars where located within guardrail concrete foundation (Standard Detail 606 (24)). Payment is incidental to 606 item.

5. Contractor shall avoid dywidag bars when driving guardrail posts.

6. Dywidag rod and coupler system is shown. contractor may propose an equal system for approval by Resident.

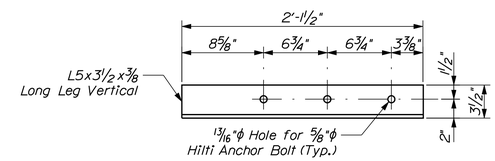

ABUTMENT HEADWALL SUPPORT DETAIL
(Detail "A" Shown, Detail "B" Opp. Hand)

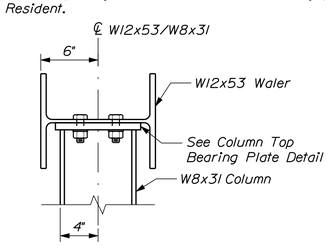

WALER & COLUMN CONNECTION DETAIL

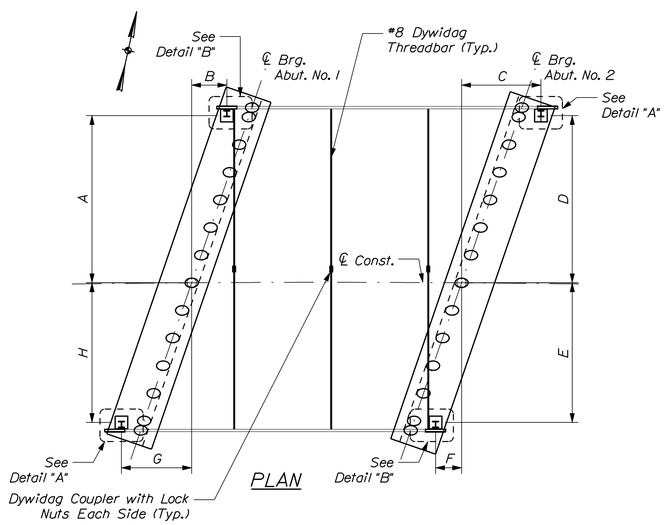

PLAN

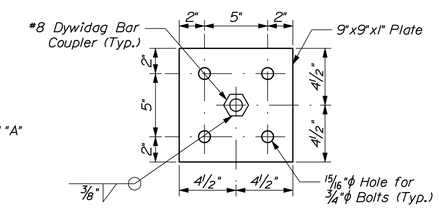

DYWIDAG BAR COUPLER PLATE DETAIL

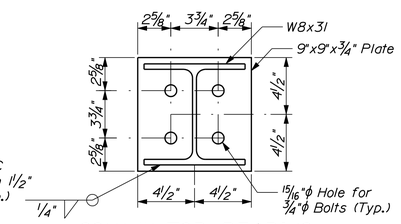

COLUMN TOP BEARING PLATE DETAIL

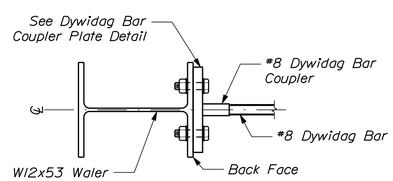

DYWIDAG & WALER CONNECTION DETAIL

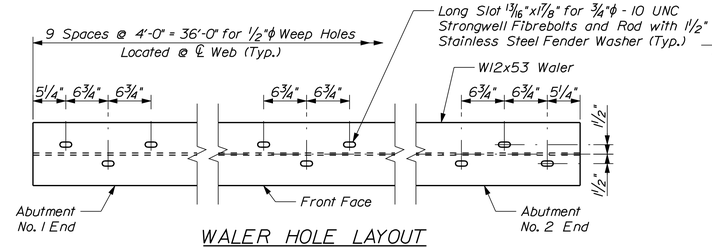

WALER HOLE LAYOUT
(Downstream shown, Upstream Opp. Hand)

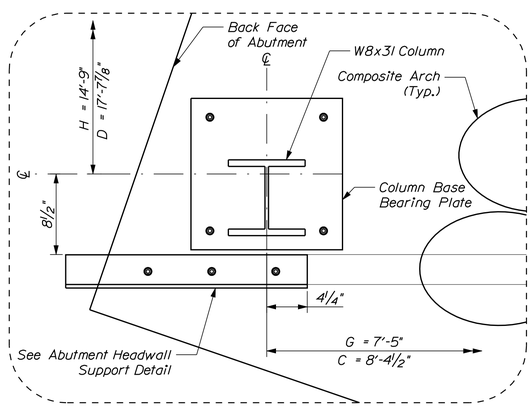

DETAIL "A"

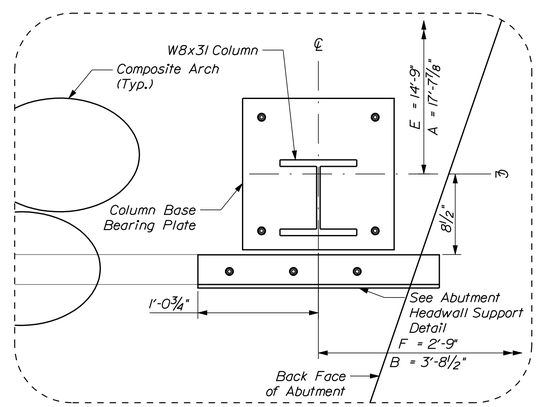

DETAIL "B"

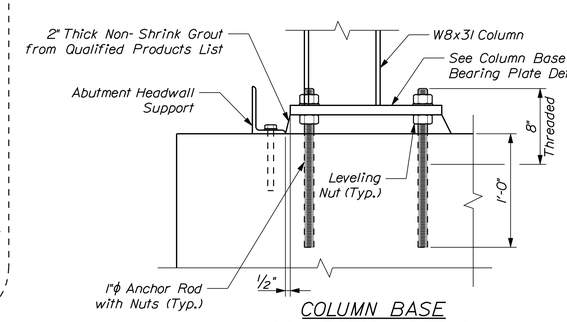

COLUMN BASE CONNECTION DETAIL

Note:
Anchor Rods shall meet the requirements of ASTM F1554, Grade 36

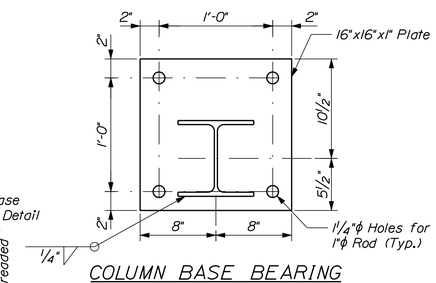

COLUMN BASE BEARING PLATE DETAIL

SEA
SEA CONSULTANTS INC.
Scientists/Engineers/Architects

STATE OF MAINE
DEPARTMENT OF TRANSPORTATION

BH-1668(700)X

PIN 16687.00

BRIDGE NO. 3365

BRIDGE PLANS

PROJ. MANAGER	N. BENOIT		DATE
DESIGN-DETAILED	K. WOOD	K. CONSTANZER	
CHECKED-REVIEWED	K. WOOD	P. HETHERLY	4\12\10
DESIGN2-DETAILED2	K. WOOD		
DESIGN3-DETAILED3			
REVISIONS 1			
REVISIONS 2			
REVISIONS 3			
REVISIONS 4			
FIELD CHANGES			

SIGNATURE

P.E. NUMBER

DATE

JENKINS BRIDGE
GREAT WORKS STREAM
BRADLEY PENOBSCOT COUNTY

HEADWALL DETAILS

SHEET NUMBER
16
OF 18

Filename: ...\MSTA\016_Headwalls_1.dgn Division: BRIDGE Username: kris.constanzer Date:4/16/2010

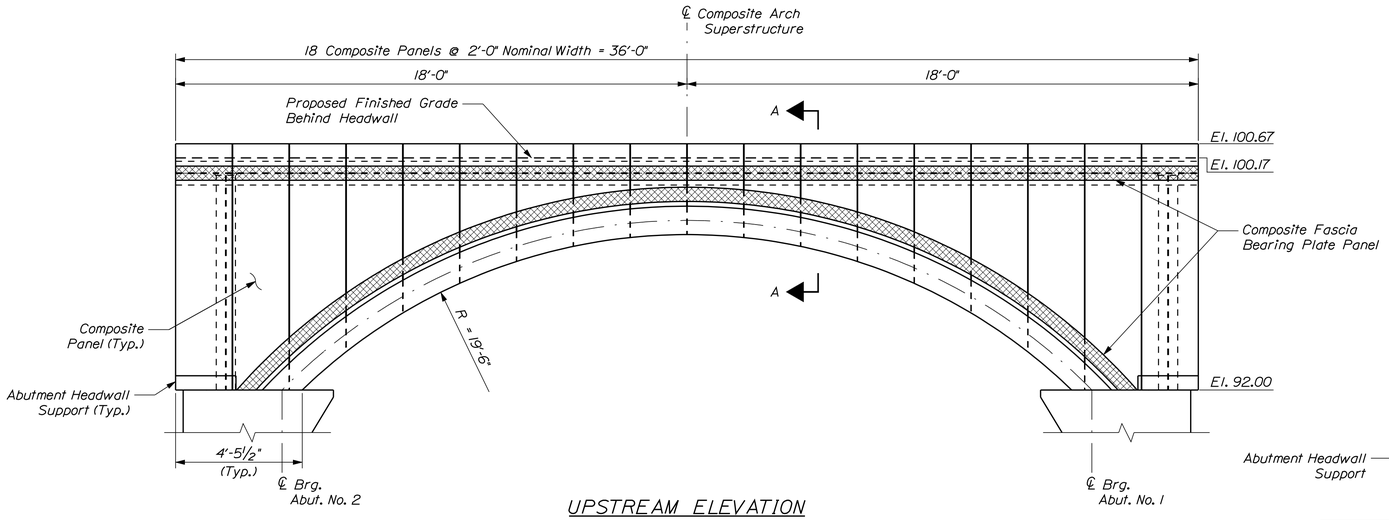

UPSTREAM ELEVATION

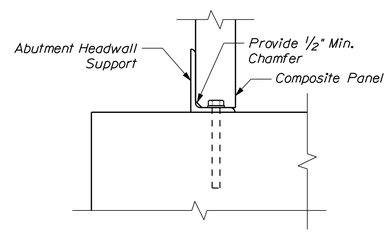

CHAMFER DETAIL

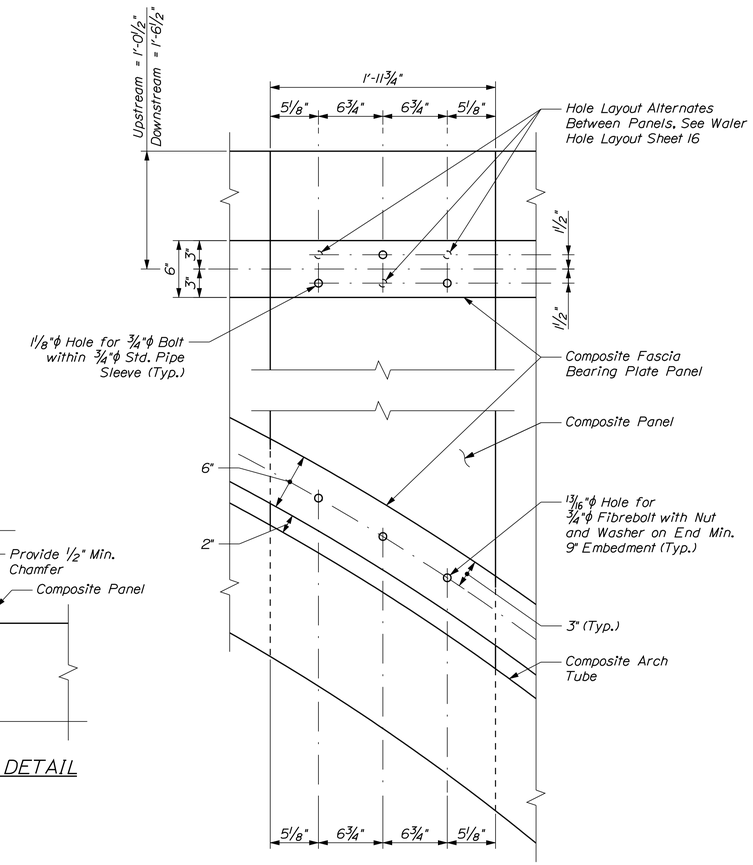

INDIVIDUAL PANEL DETAIL

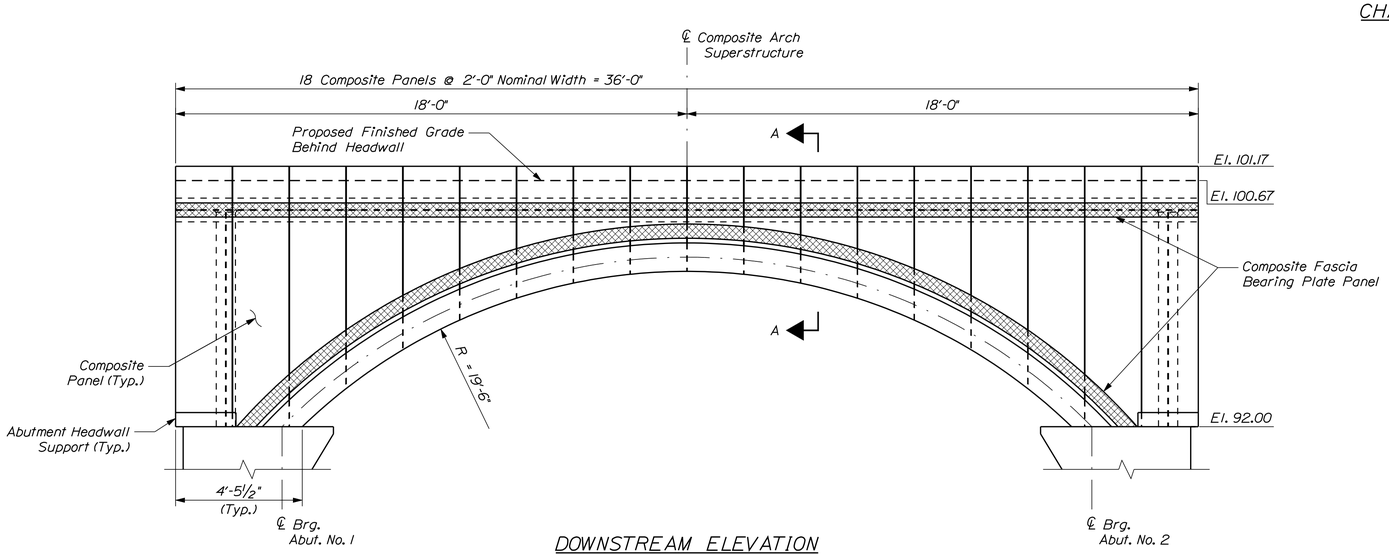

DOWNSTREAM ELEVATION

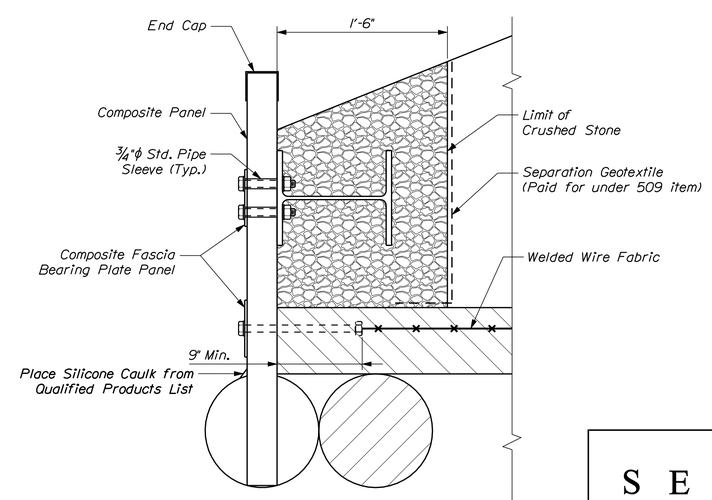

SECTION A-A

STATE OF MAINE
DEPARTMENT OF TRANSPORTATION

BH-1668(700)X

PIN 16687.00

BRIDGE NO. 3365

BRIDGE PLANS

PROJ. MANAGER	N. BENOIT	BY	DATE
DESIGN-DETAILED	K. WOOD	K. CONSTANZER	4\12\10
CHECKED-REVIEWED	K. WOOD	P. HETHERLY	
DESIGN2-DETAILED2			
DESIGN3-DETAILED3			
REVISIONS 1			
REVISIONS 2			
REVISIONS 3			
REVISIONS 4			
FIELD CHANGES			

SIGNATURE

P.E. NUMBER

DATE

JENKINS BRIDGE
GREAT WORKS STREAM
BRADLEY PENOBSCOT COUNTY

HEADWALL DETAILS

SEA
SEA CONSULTANTS INC.
Scientists/Engineers/Architects

SHEET NUMBER
17
OF 18

Filename: ...\MSTA\017_Headwalls_2.dgn Division: BRIDGE Username: kris.constanzer Date:4/22/2010

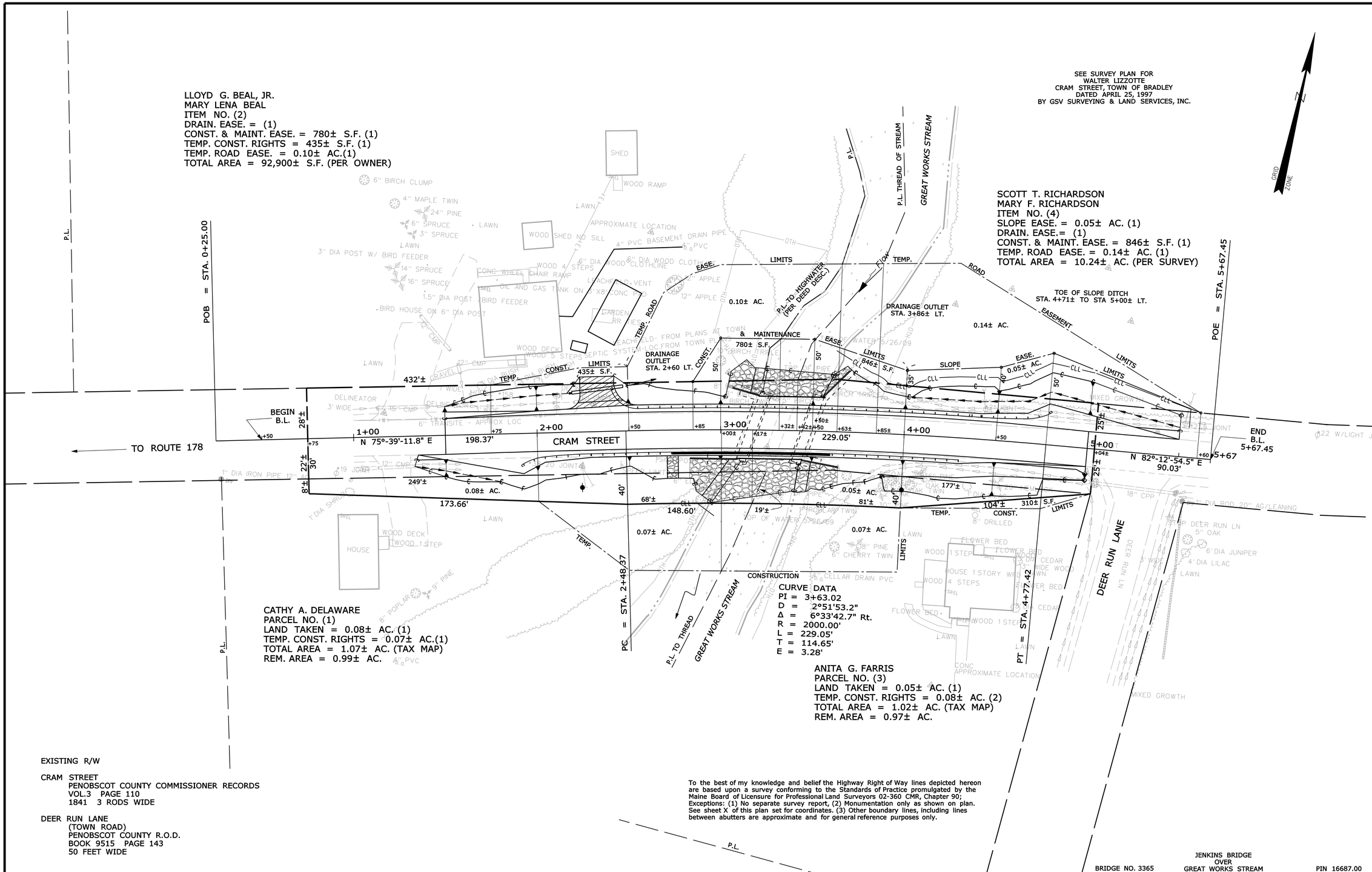

EXISTING R/W

CRAM STREET
PENOBSCOT COUNTY COMMISSIONER RECORDS
VOL.3 PAGE 110
1841 3 RODS WIDE

DEER RUN LANE
(TOWN ROAD)
PENOBSCOT COUNTY R.O.D.
BOOK 9515 PAGE 143
50 FEET WIDE

To the best of my knowledge and belief the Highway Right of Way lines depicted hereon are based upon a survey conforming to the Standards of Practice promulgated by the Maine Board of Licensure for Professional Land Surveyors 02-360 CMR, Chapter 90; Exceptions: (1) No separate survey report, (2) Monumentation only as shown on plan. See sheet X of this plan set for coordinates. (3) Other boundary lines, including lines between abutters are approximate and for general reference purposes only.

SYMBOLS

- ● IP or ● P/P (IRON PIPE or PIN FOUND)
- ☐ S.T. (SEPTIC TANK)
- ▣ (ROW MONUMENT)
- △BM (TRAVERSE POINT)
- ○WELL (WELL)
- GRADING LIMIT LINE
- CONSTRUCTION LIMIT LINE
- PROPERTY LINE
- LIMITS OF "ARROW" RIGHT TO PORTION (L.O.W.P.)
- EXISTING RIGHT OF WAY
- NEW RIGHT OF WAY
- NEW ROW WITHIN EXIST. ROW
- CONTROL OF ACCESS
- WATER LINE
- GAS LINE
- ELECTRIC LINE
- TELEPHONE LINE
- SEWER LINE

ITEM	TECH	CHECKED
BASE MAP		
EXIST. R/W	D.S.G.	
PROP. LINES	D.S.G.	
AREAS		

STATE OF MAINE
DEPARTMENT OF TRANSPORTATION
16 STATE HOUSE STATION - AUGUSTA, ME 04333-0016
BRADLEY
RIGHT OF WAY MAP

BRIDGE NO. 3365 — JENKINS BRIDGE OVER GREAT WORKS STREAM — PIN 16687.00

REVISIONS			
NO.	DATE	DESCRIPTION	BY

PLAN FILED IN PLAN BOOK	PAGE	COUNTY RECORD			
NO.	GRANTOR	INSTRUMENT	DATE	BOOK	PAGE
		COND.	4/13/10	12100	21

DAVID A. COLE
COMMISSIONER
KENNETH L. SWEENEY
ACTING CHIEF ENGINEER
DATE

STATE OF MAINE — PETER A. BELANGER 1341 — PROFESSIONAL LAND SURVEYOR

TOWN WAY
CRAM STREET
BRADLEY — PENOBSCOT COUNTY
FEDERAL AID PROJECT NO. BH-1668(700)X

JANUARY 2010 | RIGHT-OF-WAY MAP | D.O.T. FILE NO. 10-457
SCALE 1" = 25' | SHEET 1 OF 1

SHEET NUMBER
18
OF 18

Filename: ...\00\ROW\MSTA\001_RWPLAN1.dgn Division: BRIDGE Username: mark.parlin Date:4/23/2010