STATE OF MAINE
DEPARTMENT OF TRANSPORTATION

SPECIFICATIONS

Design: Load and Resistance Factor Design per AASHTO LRFD Bridge Design Specifications, Fourth Edition 2007 and Interim Specifications through 2009.

DESIGN LOADING

Live Load Strength 1 Case ..... HL - 93 Modified
All Other Load Cases ..... HL - 93

TRAFFIC DATA

Current (2010) AADT 330
Future (2020) AADT 380
DHV - % of AADT 14
Design Hour Volume 60
Heavy Trucks (% of AADT) 8
Heavy Trucks (% of DHV) 6
Directional Distribution (% of DHV) 60
18 kip Equivalent P 2.0 16
18 kip Equivalent P 2.5 15
Design Speed (mph) 45

HYDROLOGIC DATA

Drainage Area ..... 19.85 sq mi
Check Discharge (Q100) 991cfs
Headwater Elevation (Q100) ..... 231.88 ft
Discharge Velocity (Q100) ..... 5.31 fps

MATERIALS

Concrete:
- Structural Wearing Surface ..... Class "LP"
- Barriers, Curbs, Sidewalks & Transition Barriers ..... Class "LP"
- Seals ..... Class "S"
- Precast ..... Class "P"
- Fill ..... "Fill"
- All Other ..... Class "A"

Reinforcing Steel ..... ASTM A 615/A 615M, Grade 60
Prestressing Strands ..... AASHTO 203 (ASTM A 416), Grade 270, Low Relaxation

Structural Steel:
- All Material (except as noted) ..... ASTM A 709, Grade 50W (unpainted)
- High Strength Bolts ..... ASTM A 325, Type 3

BASIC DESIGN STRESSES

Concrete ..... f 'c = 4,350 psi
Precast Concrete ..... f 'c = 4,350 psi
Precast Concrete Beams ..... f 'c = 6000 psi/min

Reinforcing Steel ..... f y = 60,000 psi
Prestressing Strand ..... F µ = 270,000 psi
Structural Steel:
- ASTM A 709, Grade 50W ..... F y = 50,000 psi
- ASTM A 709, Grade 36 ..... F y = 36,000 psi
- ASTM A 325 ..... F µ = 120,000 psi

UTILITIES

Central Maine Power Company
Fairpoint Communications
Time Warner Cable

MAINTENANCE OF TRAFFIC

The bridge will be closed to traffic for one construction season.

ALFRED
YORK COUNTY
NUTTER'S BRIDGE
OVER
LITTLEFIELD RIVER
BACK ROAD
PROJECT NO. AC-BR-1667(700)X
PROJECT LENGTH 0.072 mi.
BRIDGE REPLACEMENT
BRIDGE NO. 1271

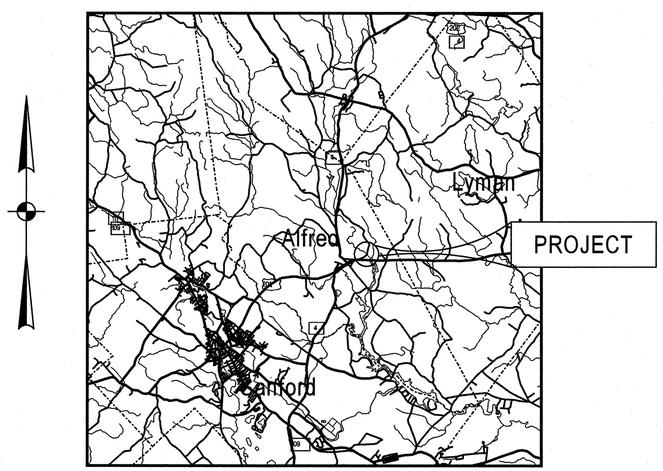

LOCATION MAP

2 0 2 4
Scale of Miles

LIST OF DRAWINGS

Title Sheet 1
Estimated Quantities & Notes 2
General Plan 3
Profile 4
Boring Location Plan & Interpretive Subsurface Profile 5
Boring Logs 6
Cross - Sections 7-14
Abutment Plan 15
Abutment Details 16
Abutment Reinforcing 17
Superstructure 18
Right of Way Map 19

STATE OF MAINE
DEPARTMENT OF TRANSPORTATION

APPROVED

		DATE
COMMISSIONER:		4/27/10
CHIEF ENGINEER:		4/26/10

STATE OF MAINE ★ KEVIN R. CUMMINGS 11157 ★ LICENSED PROFESSIONAL ENGINEER

SIGNATURE 11157
P.E. NUMBER
4-21-10
DATE

PROJECT INFORMATION

PROGRAM	BRIDGE
PROJECT MANAGER	JIM WENTWORTH
DESIGNER	KEVIN CUMMINGS
CONSULTANT	
PROJECT RESIDENT	
CONTRACTOR	
PROJECT COMPLETION DATE	

PIN 166777.00

AC-BR-1667(700)X

ALFRED
NUTTER'S BRIDGE

TITLE SHEET

SHEET NUMBER
1
OF 19

Filename:\00\bridge\msta\001_Title.dgn Division: BRIDGE Username: michelle.boone Date:4/21/2010

ESTIMATED QUANTITIES

ITEM NO.	DESCRIPTION	QUANTITY	UNIT
202.19	REMOVING EXISTING BRIDGE 133 CY	1	LS
203.20	COMMON EXCAVATION	800	CY
203.24	COMMON BORROW	10	CY
203.25	GRANULAR BORROW	140	CY
206.082	STRUCTURAL EARTH EXCAVATION - MAJOR STRUCTURES	535	CY
304.10	AGGREGATE SUBBASE COURSE - GRAVEL	675	CY
403.208	HOT MIX ASPHALT 12.5 MM HMA SURFACE	90	T
403.213	HOT MIX ASPHALT 12.5 MM BASE	90	T
409.15	BITUMINOUS TACK COAT - APPLIED	30	G
502.229	STR. CONCRETE ABUTMENT UNDERWATER (100 CY)	1	LS
511.07	COFFERDAM (Abutment No. 1)	1	LS
511.07	COFFERDAM (Abutment No. 2)	1	LS
512.081	FRENCH DRAINS (75 LF)	1	LS
514.06	CURING BOX FOR CONCRETE CYLINDERS	1	EA
515.21	PROTECTIVE COATING FOR CONCRETE SURFACES (30 SY)	1	LS
530.04	PREFABRICATED BRIDGE STRUCTURE AND ASSEMBLY	1	LS
534.76	PRECAST ABUTMENT (145 CY)	1	LS
605.09	6 INCH UNDERDRAIN TYPE B	80	LF
605.10	6 INCH UNDERDRAIN OUTLET	20	LF
606.17	GUARDRAIL TYPE 3B - SINGLE RAIL	163	LF
606.21	GUARDRAIL TYPE 3B - 15 FOOT RADIUS AND LESS	25	LF
606.265	TERMINAL END - SINGLE RAIL - GALVANIZED STEEL	1	EA
606.353	REFLECTORIZED FLEXIBLE GUARDRAIL MARKER	8	EA
606.78	LOW VOLUME GUARDRAIL ENDS ~ TYPE 3	3	EA
607.24	REMOVE AND RESET FENCE	150	LF
610.16	HEAVY RIPRAP	425	CY
615.0701	LOAM - PLAN QUANTITY	32	CY
618.1401	SEEDING METHOD NUMBER 2 - PLAN QUANTITY	5	UN
619.12	MULCH	5.5	UN
618.15	TEMPORARY SEEDING	13.5	LB
620.58	EROSION CONTROL GEOTEXTILE	385	SY
627.733	WHITE OR YELL. PAINTED PVMT MARKING LINE (PLAN QUANTITY)	1100	LF
627.76	TEMPORARY PVMT. MARK LINE, W OR YELLOW	1	LS
629.05	HAND LABOR, STRAIGHT TIME	20	HR
631.12	ALL PURPOSE EXCAVATOR (INCLUDING OPERATOR)	10	HR
631.172	TRUCK - LARGE (INCLUDING OPERATOR)	10	HR
639.18	FIELD OFFICE TYPE A	1	EA
652.33	DRUM	35	EA
652.34	CONE	50	EA
652.35	CONSTRUCTION SIGNS	200	SF
652.361	MAINTENANCE OF TRAFFIC CONTROL DEVICES 162 CD	1	LS
652.38	FLAGGER	100	HR
656.75	TEMPORARY SOIL EROSION AND WATER POLLUTION CONTROL	1	LS
659.10	MOBILIZATION	1	LS

GENERAL CONSTRUCTION NOTES

1. During construction, the road will be closed to traffic for a time period specified in the Special Provisions.

2. For easements, construction limits and right of way lines, refer to Right of Way Map.

3. The clearing limits as shown on the plans are approximate. The exact limits will be established in the field by the Resident. Payment for clearing will be considered incidental to Contract items.

4. All utility facilities shall be adjusted by the respective utilities unless otherwise noted.

6 All aluminum bridge rail, rail posts, and associated hardware which are to be removed shall be carefully salvaged by the Contractor and will remain the property of the Department. Payment will be considered incidental to related Contract items.

7. Do not excavate for Aggregate Subbase Course where existing material is suitable as determined by the Resident.

8. In areas where the Resident directs the Contractor not to excavate to the subgrade line shown on the plans, payment for removing existing pavement, grubbing, shaping, ditching, and compacting the existing subbase and layers of new subbase 6 inches or less thick will be made under appropriate equipment rental items.

9. All embankment material, except as otherwise shown, placed below EL. 231.88 shall be Granular Borrow meeting the requirements of Subsection 703.19, Material for Underwater Backfill.

10. Place riprap on sideslopes as shown on plans.

11. Construct the riprap shelf at each abutment as shown on plans.

12. Place loam 2 inches deep on all new or reconstructed sideslopes or as directed by the Resident.

13. Erosion Control Mix may be substituted in those areas normally receiving loam and seed as directed by the Resident. Placement shall be in accordance with Standard Specifications Section 619, Mulch. Payment will be made under Item No. 619.1401, Erosion Control Mix.

14. Place a 24-in. wide strip of Temporary Erosion Control Blanket on the sideslopes along the top of the riprap and behind the wingwalls.

15. Guardrail posts as shown in the Standard Details shall be modified from the indicated length of 6 feet to a length of 7 feet with an embedment of 4.5 feet. Payment will be considered incidental to the guardrail pay items.

17. A Low Volume Guardrail End shall be installed concurrently with the placement of each section of beam guardrail.

18. Extended-use Erosion Control Blanket, seeded gutters, riprap downspouts, and other gutters lined with Stone Ditch Protection shall be constructed after paving and shoulder work is completed, where it is apparent that runoff will cause continual erosion. Payment will be made under the appropriate Contract items.

19. Protective Coating for Concrete Surfaces shall be applied to the following areas:

All exposed surfaces of concrete curbs.
All exposed surfaces of Concrete Transition Barriers.
Concrete barrier railing.
Top of abutment backwalls and to one foot below the top of backwalls on the back side.

20. Project information referred to below may be accessed at the following MaineDOT web address: http://www.maine.gov/mdot/comprehensive-list-projects/project-information.php.

21. The hydrologic report of the bridge site may be accessed at the MaineDOT web address. The hydrologic report is based on MaineDOT's interpretation of the information obtained for the subject site. No assurance is given that the information or the conclusions of the report will be representative of actual conditions at the time of construction.

22. The project geotechnical report titled: Geotechnical Design Report For The Replacement Of: Nutter's Bridge, Over Littlefield River, Alfred, Maine, Soils Report No 2010-04., Dated March 2, 2010 may be accessed at the MaineDOT web address.

23. Geotechnical information furnished or referred to in this plan set is for the use of the Bidders and the Contractor. No assurance is given that the information or interpretations will be representative of actual subsurface conditions at the construction site. MaineDOT will not be responsible for the Bidders' or Contractor's interpretations of, or conclusions drawn from, the geotechnical information. The boring logs contained in the plan set present factual and interpretive subsurface information collected at discrete locations. Data provided may not be representative of the subsurface conditions between the boring locations.

24. Quantities included for pay items measured and paid for by Lump Sum are estimated quantities and are provided by MaineDOT for informational purposes only. Lump Sum pay items will be paid for at the Contract Bid amount, with no addition or reduction in payment to the Contractor if the actual final quantities are different from the MaineDOT provided estimated quantities, except as follows:

a. If a Lump Sum pay item is eliminated, the requirements of Standard Specifications Section 109.2, Elimination of Items, will take precedence.

b. If other Contract Documents specifically allow a change in payment for a Lump Sum pay item, those requirements will be followed.

c. If a design change results in changes to estimated quantities for Lump Sum pay items, price adjustments will be made in accordance with Standard Specifications Section 109.7, Equitable Adjustments to Compensation.

25. The Contractor shall submit a Bridge Demolition Plan to the Resident at least 10 business days prior to the start of demolition work. The plan shall outline the methods and equipment to be used to remove and dispose of all materials included in the existing bridge. No work related to the removal of the bridge shall be undertaken by the Contractor until MaineDOT has reviewed the Bridge Demolition Plan for appropriateness and completeness. Payment for all work necessary for developing, submitting and finalizing the Demolition Plan will be considered incidental to the bridge removal pay item.

STATE OF MAINE
DEPARTMENT OF TRANSPORTATION

AC-BR-1667(700)X

PIN 16677.00

BRIDGE NO. 1271

BRIDGE PLANS

PROJ. MANAGER JIM WENTWORTH	BY	DATE
DESIGN-DETAILED KRC	MLB	APRIL 2010
CHECKED-REVIEWED ----	DMD	APRIL 2010
DESIGN2-DETAILED2 ----		
DESIGN3-DETAILED3 ----		
REVISIONS 1 ----		
REVISIONS 2 ----		
REVISIONS 3 ----		
REVISIONS 4 ----		
FIELD CHANGES ----		

SIGNATURE

P.E. NUMBER

DATE

NUTTER'S BRIDGE
LITTLEFIELD RIVER
ALFRED YORK COUNTY

ESTIMATED QUANTITIES

SHEET NUMBER
2
OF 19

Filename: ...\bridge\msto\002_Estimate.dgn Division: BRIDGE Username: michelle.boone Date:4/27/2010

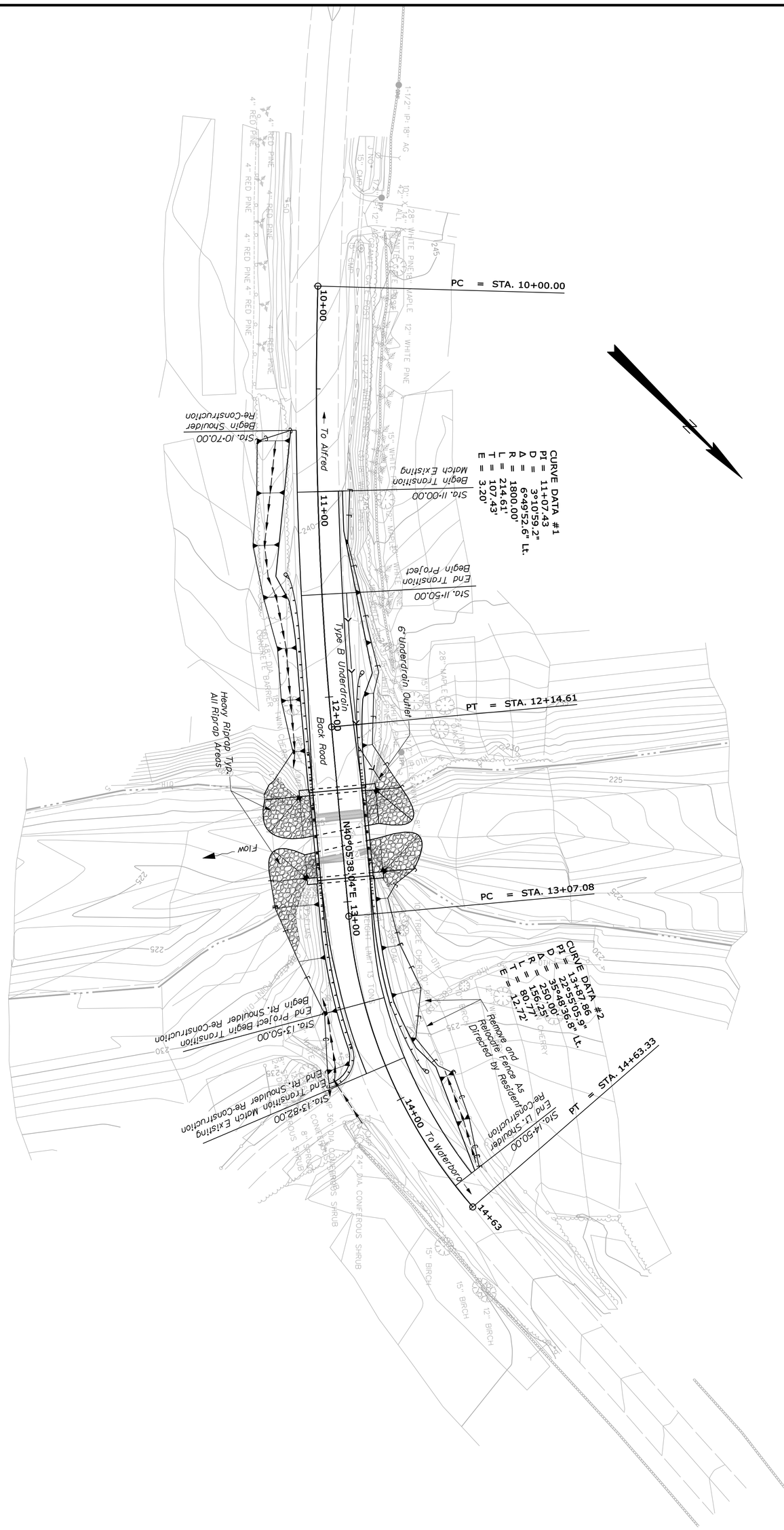

NUTTER'S BRIDGE LITTLEFIELD RIVER ALFRED YORK COUNTY PLANS	PROJ. MANAGER JIM WENTWORTH	BY	DATE	STATE OF MAINE DEPARTMENT OF TRANSPORTATION
	DESIGN-DETAILED KRC	MLB	APRIL 2010	
	CHECKED-REVIEWED _____	DMD	APRIL 2010	SIGNATURE
	DESIGN2-DETAILED2 _____	_____	_____	AC-BR-1667(700)X
	DESIGN3-DETAILED3 _____	_____	_____	P.E. NUMBER
	REVISIONS 1 _____		_____	
	REVISIONS 2 _____		_____	
	REVISIONS 3 _____		_____	DATE
	REVISIONS 4 _____		_____	PIN
	FIELD CHANGES _____		_____	BRIDGE NO. 1271 16677.00 BRIDGE PLANS

SHEET NUMBER 3 OF 19

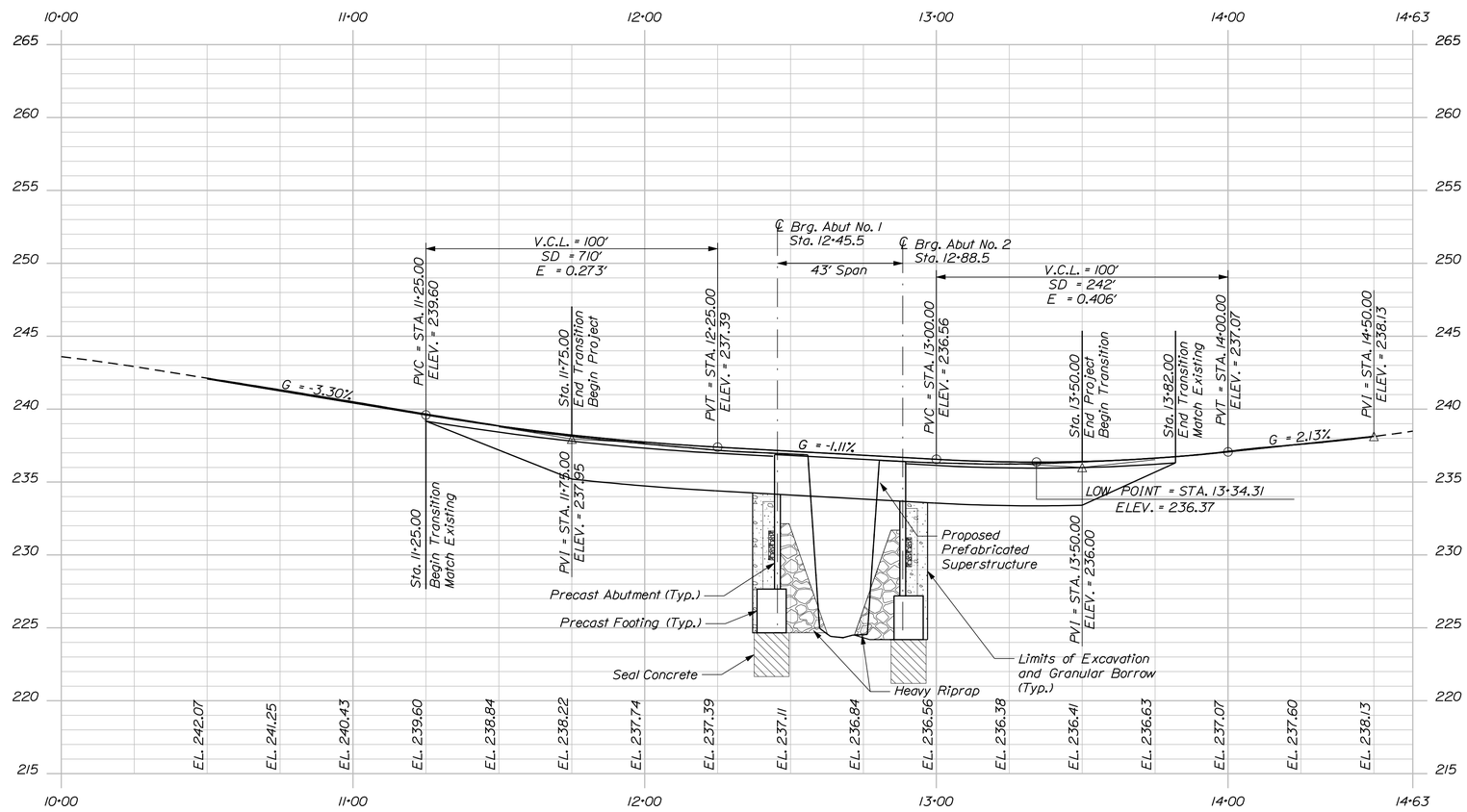

PROFILE

Horiz. 25 0 25 50

Vert. 5 0 5 10

Scale of Feet

Filename: ...\00\bridge\msto\004_Profile.dgn Division: BRIDGE Username: michelle.boone Date:4/27/2010

STATE OF MAINE
DEPARTMENT OF TRANSPORTATION

AC-BR-1667(700)X

PIN 16677.00

BRIDGE NO. 1271 BRIDGE PLANS

		BY	DATE
PROJ. MANAGER JIM WENTWORTH			
DESIGN-DETAILED	KRC	MLB	APRIL 2010
CHECKED-REVIEWED	----	DMD	APRIL 2010
DESIGN2-DETAILED2	----	----	----
DESIGN3-DETAILED3	----	----	----
REVISIONS 1	----	----	----
REVISIONS 2	----	----	----
REVISIONS 3	----	----	----
REVISIONS 4	----	----	----
FIELD CHANGES	----	----	----

SIGNATURE

P.E. NUMBER

DATE

NUTTER'S BRIDGE
LITTLEFIELD RIVER
ALFRED YORK COUNTY

PROFILE

SHEET NUMBER

4

OF 19

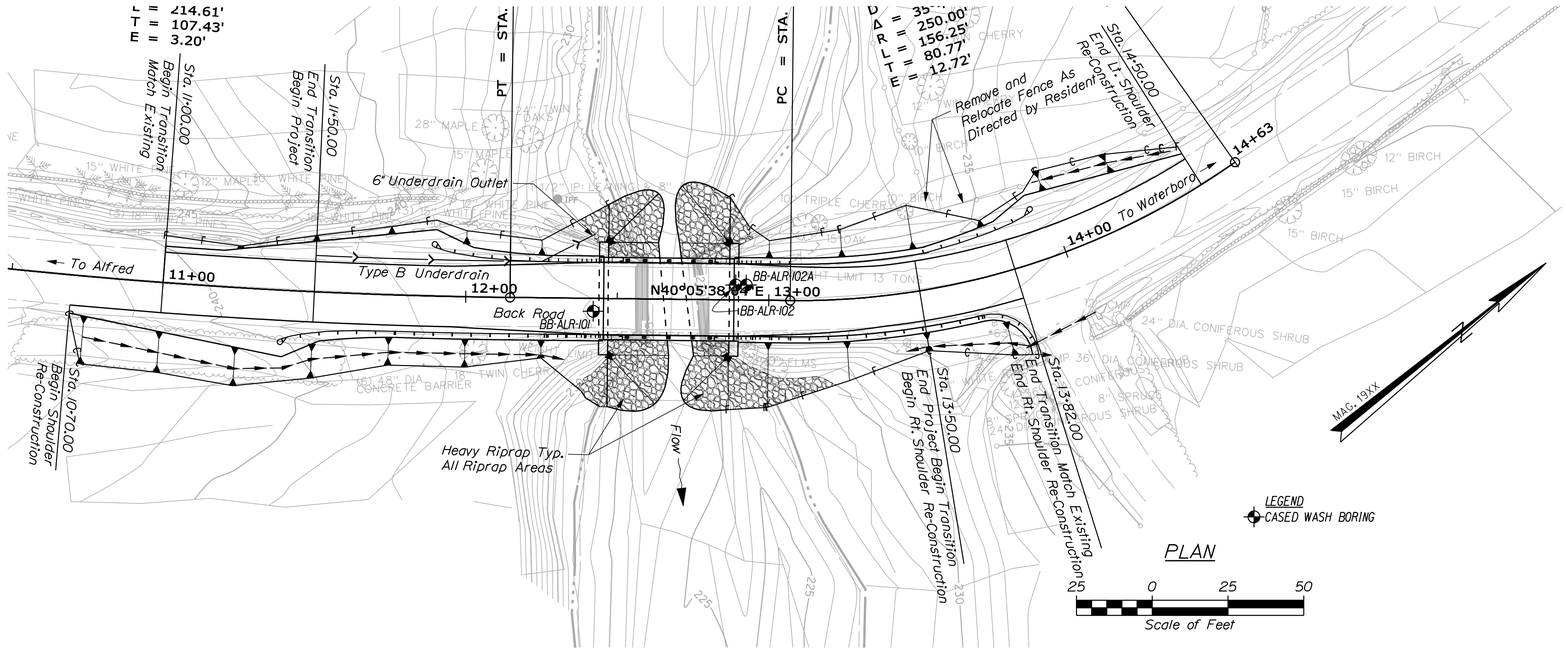

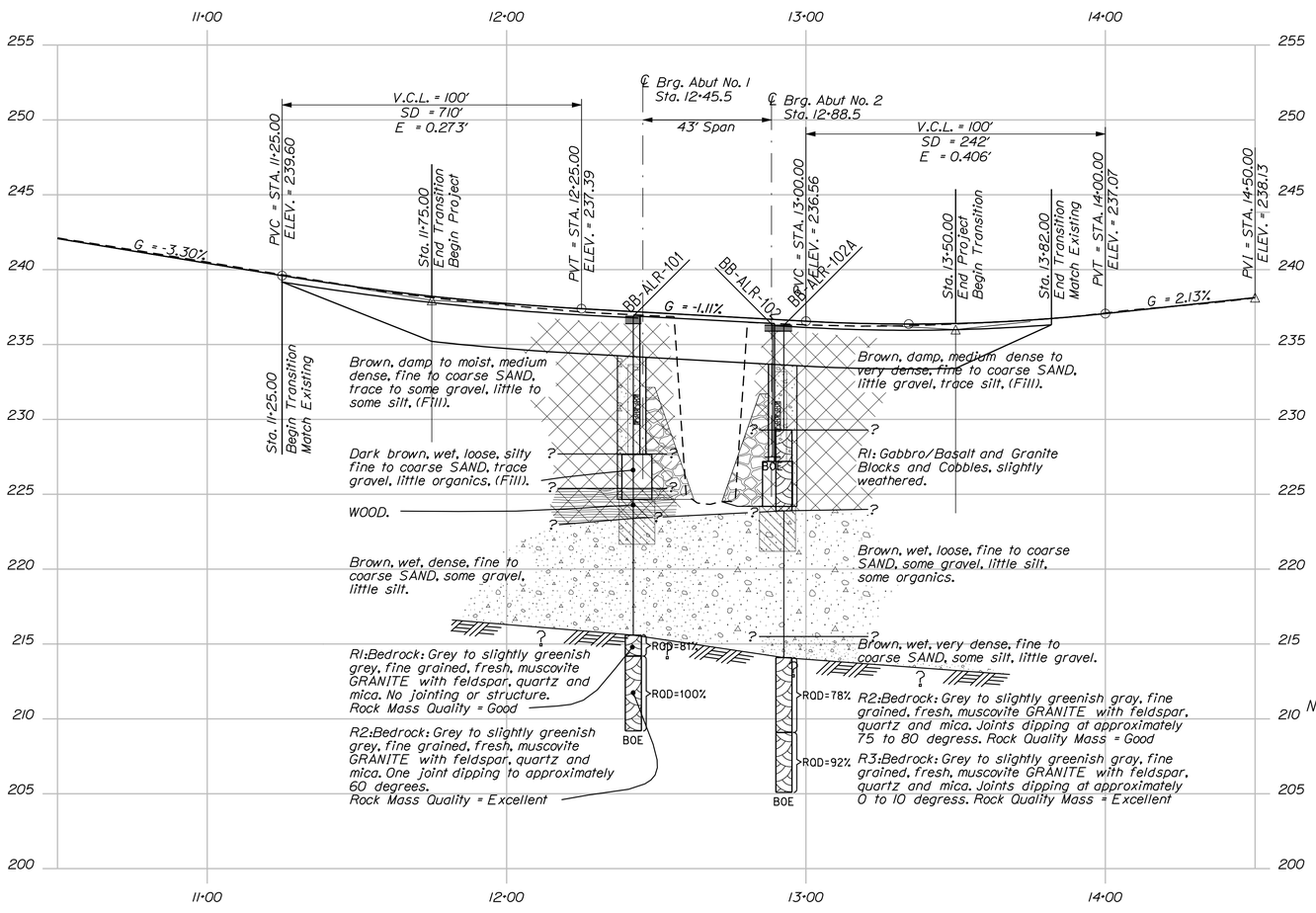

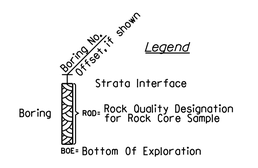

PROFILE

HORIZ 25 0 25 50

VERT 5 0 5 10

SCALE

Note: This generalized interpretive soil profile is intended to convey trends in subsurface conditions. The boundaries between strata are approximate and idealized, and have been developed by interpretations of widely spaced explorations and samples. Actual soil transitions may vary and are probably more erratic. For more specific information refer to the exploration logs.

STATE OF MAINE
DEPARTMENT OF TRANSPORTATION

AC-BR-1667(700)X

PIN 16677.00

BRIDGE NO. 1271

BRIDGE PLANS

		BY	DATE
PROJ. MANAGER			
DESIGN-DETAILED	K.MAGUIRE	T.WHITE	NOV 2009
CHECKED-REVIEWED			
DESIGN2-DETAILED2			
DESIGN3-DETAILED3			
REVISIONS 1			
REVISIONS 2			
REVISIONS 3			
REVISIONS 4			
FIELD CHANGES			

SIGNATURE

P.E. NUMBER

DATE

NUTTER'S BRIDGE
LITTLEFIELD RIVER
ALFRED YORK COUNTY

BORING LOCATION PLAN & INTERPRETIVE SUBSURFACE PROFILE

SHEET NUMBER

5

OF 19

Filename: ...\GEOTECH\MSTA\005_BLP&ISP1.dgn Division: BRIDGE Username: michelle.boone Date:4/27/2010

Filename: ...\MSTA\006_BORING LOGS1.dgn   Division: BRIDGE   Username: michelle.boone   Date:4/27/2010

Maine Department of Transportation
Soil/Rock Exploration Log
US CUSTOMARY UNITS

Project: Nutter's Bridge #1271 carries Back Rd. over Littlefield River
Location: Alfred, Maine

Boring No.: BB-ALR-101
PIN: 16677.00

Driller:	MaineDOT	Elevation (ft.)	236.9	Auger ID/OD:	5" Solid Stem
Operator:	Giguere/Giles/Wright	Datum:	NAVD 88	Sampler:	Standard Split Spoon
Logged By:	B. Wilder	Rig Type:	CME 45C	Hammer Wt./Fall:	140#/30"
Date Start/Finish:	10/30/09; 07:30-11:30	Drilling Method:	Cased Wash Boring	Core Barrel:	NQ-2"
Boring Location:	12+42.1, 4.3 Rt.	Casing ID/OD:	NW	Water Level*:	12.0' bgs.
Hammer Efficiency Factor: 0.84		Hammer Type:	Automatic ☒ Hydraulic ☐	Rope & Cathead ☐	

Definitions:
D = Split Spoon Sample
MD = Unsuccessful Split Spoon Sample attempt
U = Thin Wall Tube Sample
MU = Unsuccessful Thin Wall Tube Sample attempt
V = Insitu Vane Shear Test, PP = Pocket Penetrometer
MV = Unsuccessful Insitu Vane Shear Test attempt
R = Rock Core Sample
SSA = Solid Stem Auger
HSA = Hollow Stem Auger
RC = Roller Cone
WOH = weight of 140lb. hammer
WOR/C = weight of rods or casing
WO1P = Weight of one person
S_u = Insitu Field Vane Shear Strength (psf)
T_v = Pocket Torvane Shear Strength (psf)
q_p = Unconfined Compressive Strength (ksf)
N-uncorrected = Raw field SPT N-value
Hammer Efficiency Factor = Annual Calibration Value
N_{60} = SPT N-uncorrected corrected for hammer efficiency
N_{60} = (Hammer Efficiency Factor/60%)*N-uncorrected
$S_{u(lab)}$ = Lab Vane Shear Strength (psf)
WC = water content, percent
LL = Liquid Limit
PL = Plastic Limit
PI = Plasticity Index
G = Grain Size Analysis
C = Consolidation Test

Depth (ft.)	Sample No.	Pen./Rec. (in.)	Sample Depth (ft.)	Blows (/6 in.) Shear Strength (psf) or RQD (%)	N-uncorrected	N_{60}	Casing Blows	Elevation (ft.)	Graphic Log	Visual Description and Remarks	Laboratory Testing Results/ AASHTO and Unified Class
0							SSA	236.40		Pavement — 0.50	
	1D/A	24/18	1.50 - 3.50	3/4/5/5	9	13				(1D) 1.5-2.5' bgs. Brown, damp, medium dense, fine to coarse SAND, some gravel, little silt, (Fill). (1D/A) 2.5-3.5' bgs. Brown, damp, medium dense, fine to coarse SAND, some silt, trace gravel, (Fill).	G#236853 A-1-b, SM WC=3.7% G#236854 A-2-4, SM WC=9.5%
5	2D	24/15	5.00 - 7.00	8/14/6/6	20	28				Brown, moist, medium dense, fine to coarse SAND, some gravel, some silt (Fill).	G#236855 A-2-4, SM WC=9.8%
								227.40		— 9.50 Dark brown, wet, loose, Silty fine to coarse SAND, trace gravel, little organics, muck (Fill).	G#236856 A-4, SM WC=68.7%
10	3D	24/16	10.00 - 12.00	2/2/2/8	4	6	12				
							10	225.40		— 11.50 Wood layer from 11.5-13.5' bgs, (Fill).	
							97				
							80	223.40		— 13.50	
							98				
15	4D	24/16	15.00 - 17.00	12/14/14/14	28	39	55			Brown, wet, dense, fine to coarse SAND, some gravel, little silt.	G#236857 A-2-4, SM WC=11.6%
							68				
							75				
							72				
							76				
20	5D	16.8/6	20.00 - 21.40	13/14/40(4.8")	---					Similar to above, except very dense.	
	R1	16.8/13	21.30 - 22.70	RQD = 81%			NQ-2	215.60		— 21.30 Top of Bedrock at Elev. 215.6'. Bedrock: Grey to slightly greenish grey, fine grained, fresh, muscovite GRANITE with feldspar, quartz and mica. No jointing or structure. Rock Mass Quality = Good. R1:Core Times (min:sec) 21.3-22.3' (10:14) 22.3-22.7' (12:05) 81% Recovery	
	R2	60/60	22.70 - 27.70	RQD = 100%						Changed Core Bit Bedrock: Grey to slightly greenish grey, fine grained, fresh, muscovite GRANITE with feldspar, quartz and mica. One joint dipping to approximately 60 degrees. Rock Mass Quality = Excellent. R2:Core Times (min:sec) 22.7-23.7' (3:58) 23.7-24.7' (4:55) 24.7-25.7' (4:20) 25.7-26.7' (4:40) 26.7-27.7' (5:24) 100% Recovery	
25								209.20		— 27.70 Bottom of Exploration at 27.70 feet below ground surface.	
30											
35											
40											
45											
50											

Remarks:

700-800# down pressure on Core Barrel.

Stratification lines represent approximate boundaries between soil types; transitions may be gradual.

* Water level readings have been made at times and under conditions stated. Groundwater fluctuations may occur due to conditions other than those present at the time measurements were made.

Page 1 of 1

Boring No.: BB-ALR-101

Maine Department of Transportation
Soil/Rock Exploration Log
US CUSTOMARY UNITS

Project: Nutter's Bridge #1271 carries Back Rd. over Littlefield River
Location: Alfred, Maine

Boring No.: BB-ALR-102
PIN: 16677.00

Driller:	MaineDOT	Elevation (ft.)	236.3	Auger ID/OD:	5" Solid Stem
Operator:	Giguere/Giles/Wright	Datum:	NAVD 88	Sampler:	Standard Split Spoon
Logged By:	B. Wilder	Rig Type:	CME 45C	Hammer Wt./Fall:	140#/30"
Date Start/Finish:	10/29/09; 07:30-08:30	Drilling Method:	Cased Wash Boring	Core Barrel:	N/A
Boring Location:	12+89, 4.9 Lt.	Casing ID/OD:	NW	Water Level*:	None Observed
Hammer Efficiency Factor: 0.84		Hammer Type:	Automatic ☒ Hydraulic ☐	Rope & Cathead ☐	

Definitions:
D = Split Spoon Sample
MD = Unsuccessful Split Spoon Sample attempt
U = Thin Wall Tube Sample
MU = Unsuccessful Thin Wall Tube Sample attempt
V = Insitu Vane Shear Test, PP = Pocket Penetrometer
MV = Unsuccessful Insitu Vane Shear Test attempt
R = Rock Core Sample
SSA = Solid Stem Auger
HSA = Hollow Stem Auger
RC = Roller Cone
WOH = weight of 140lb. hammer
WOR/C = weight of rods or casing
WO1P = Weight of one person
S_u = Insitu Field Vane Shear Strength (psf)
T_v = Pocket Torvane Shear Strength (psf)
q_p = Unconfined Compressive Strength (ksf)
N-uncorrected = Raw field SPT N-value
Hammer Efficiency Factor = Annual Calibration Value
N_{60} = SPT N-uncorrected corrected for hammer efficiency
N_{60} = (Hammer Efficiency Factor/60%)*N-uncorrected
$S_{u(lab)}$ = Lab Vane Shear Strength (psf)
WC = water content, percent
LL = Liquid Limit
PL = Plastic Limit
PI = Plasticity Index
G = Grain Size Analysis
C = Consolidation Test

Depth (ft.)	Sample No.	Pen./Rec. (in.)	Sample Depth (ft.)	Blows (/6 in.) Shear Strength (psf) or RQD (%)	N-uncorrected	N_{60}	Casing Blows	Elevation (ft.)	Graphic Log	Visual Description and Remarks	Laboratory Testing Results/ AASHTO and Unified Class
0							SSA	235.90		Pavement — 0.40	
	1D	24/20	1.00 - 3.00	5/8/5/5	13	18				Brown, damp, medium dense, fine to coarse SAND, little gravel, trace silt, (Fill).	G#236858 A-1-b, SP-SM WC=3.7%
5	2D	18/4	5.00 - 6.50	5/12/50	62	87				Brown, damp, very dense, fine to coarse SAND, trace silt, trace gravel, (Fill). Cobble from 6.5-7.2' bgs.	G#236859 A-1-b, SP-SM WC=3.3%
								227.50		— 8.80 Bottom of Exploration at 8.80 feet below ground surface. Hit Boulder or Granite Block, moved to BB-ALR-102A	
10											
15											
20											
25											

Remarks:

Stratification lines represent approximate boundaries between soil types; transitions may be gradual.

* Water level readings have been made at times and under conditions stated. Groundwater fluctuations may occur due to conditions other than those present at the time measurements were made.

Page 1 of 1

Boring No.: BB-ALR-102

Maine Department of Transportation
Soil/Rock Exploration Log
US CUSTOMARY UNITS

Project: Nutter's Bridge #1271 carries Back Rd. over Littlefield River
Location: Alfred, Maine

Boring No.: BB-ALR-102A
PIN: 16677.00

Driller:	MaineDOT	Elevation (ft.)	236.3	Auger ID/OD:	5" Solid Stem
Operator:	Giguere/Giles/Wright	Datum:	NAVD 88	Sampler:	Standard Split Spoon
Logged By:	B. Wilder	Rig Type:	CME 45C	Hammer Wt./Fall:	140#/30"
Date Start/Finish:	10/30/09; 08:30-14:30	Drilling Method:	Cased Wash Boring	Core Barrel:	NQ-2"
Boring Location:	12+92.5, 5.0 Lt.	Casing ID/OD:	NW & HW	Water Level*:	13.0' bgs.
Hammer Efficiency Factor: 0.84		Hammer Type:	Automatic ☒ Hydraulic ☐	Rope & Cathead ☐	

Definitions:
D = Split Spoon Sample
MD = Unsuccessful Split Spoon Sample attempt
U = Thin Wall Tube Sample
MU = Unsuccessful Thin Wall Tube Sample attempt
V = Insitu Vane Shear Test, PP = Pocket Penetrometer
MV = Unsuccessful Insitu Vane Shear Test attempt
R = Rock Core Sample
SSA = Solid Stem Auger
HSA = Hollow Stem Auger
RC = Roller Cone
WOH = weight of 140lb. hammer
WOR/C = weight of rods or casing
WO1P = Weight of one person
S_u = Insitu Field Vane Shear Strength (psf)
T_v = Pocket Torvane Shear Strength (psf)
q_p = Unconfined Compressive Strength (ksf)
N-uncorrected = Raw field SPT N-value
Hammer Efficiency Factor = Annual Calibration Value
N_{60} = SPT N-uncorrected corrected for hammer efficiency
N_{60} = (Hammer Efficiency Factor/60%)*N-uncorrected
$S_{u(lab)}$ = Lab Vane Shear Strength (psf)
WC = water content, percent
LL = Liquid Limit
PL = Plastic Limit
PI = Plasticity Index
G = Grain Size Analysis
C = Consolidation Test

Depth (ft.)	Sample No.	Pen./Rec. (in.)	Sample Depth (ft.)	Blows (/6 in.) Shear Strength (psf) or RQD (%)	N-uncorrected	N_{60}	Casing Blows	Elevation (ft.)	Graphic Log	Visual Description and Remarks	Laboratory Testing Results/ AASHTO and Unified Class
0							SSA	235.90		Pavement — 0.40	
										Brown, damp, medium dense, fine to coarse SAND, little to trace gravel, trace silt, (Fill).	
5								229.30		— 7.00 Changed to HW Casing. R1:Gabbro/Basalt and Granite Blocks and Cobbles, slightly weathered. R1:Core Times (min:sec) 7.0-8.0' (2:50) 8.0-9.0' (2:31) 9.0-10.0' (2:44) 10.0-11.0' (0:59) 11.0-12.4' (0:58)	
	R1	64.8/46	7.00 - 12.40				NQ-2				
10											
	1D	24/12	12.40 - 14.40	2/3/3/15	6	8		223.90		— 12.40 Brown, wet, loose, fine to coarse SAND, some gravel, little silt, some organics. Telescoped with NW Casing, roller coned ahead to 14.0' bgs with large roller cone.	G#236860 A-1-b, SM WC=22.8%
							22				
15							75				
							100				
							106				
							103				
							113				
20	2D	18/14	20.50 - 22.00	12/12/40	52	73	22	215.80		— 20.50 Brown, wet, very dense, fine to coarse SAND, some silt, little gravel.	G#236861 A-2-4, SM WC=13.4%
							23	214.10		a30 blows for 0.2'.	
	R2	60/60	22.20 - 27.20	RQD = 78%			a30 NQ-2			— 22.20 Top of Bedrock at Elev. 214.1'. Bedrock: Grey to slightly greenish grey, fine grained, fresh, muscovite GRANITE with feldspar, quartz and mica. Joints dipping at approximately 75 to 80 degrees. Rock Mass Quality = Good. R2:Core Times (min:sec) 22.2-23.2' (4:44) 23.2-24.2' (4:28) 24.2-25.2' (5:36) 25.2-26.2' (4:19) 26.2-27.2' (5:02) 100% Recovery	
25	R3	48/46	27.20 - 31.20	RQD = 92%						Bedrock: Grey to slightly greenish grey, fine grained, fresh, muscovite GRANITE with feldspar, quartz and mica. Joints dipping at approximately 0 to 10 degrees. Rock Mass Quality = Excellent. R3:Core Times (min:sec) 27.2-28.2' (5:37) 28.2-29.2' (7:36) 29.2-30.2' (7:20) 30.2-31.2' (10:16) 96% Recovery	
30								205.10		— 31.20 Bottom of Exploration at 31.20 feet below ground surface.	
35											
40											
45											
50											

Remarks:

700-800# down pressure on Core Barrel.

Stratification lines represent approximate boundaries between soil types; transitions may be gradual.

* Water level readings have been made at times and under conditions stated. Groundwater fluctuations may occur due to conditions other than those present at the time measurements were made.

Page 1 of 1

Boring No.: BB-ALR-102A

STATE OF MAINE
DEPARTMENT OF TRANSPORTATION

AC-BR-1667(700)X

BRIDGE NO. 1271

PIN 16677.00

BRIDGE PLANS

	BY	DATE
PROJ. MANAGER		
DESIGN-DETAILED	T.WHITE	MAR 2010
CHECKED-REVIEWED	K.MAGUIRE	
DESIGN2-DETAILED2		
DESIGN3-DETAILED3		
REVISIONS 1		
REVISIONS 2		
REVISIONS 3		
REVISIONS 4		
FIELD CHANGES		

SIGNATURE

P.E. NUMBER

DATE

NUTTER'S BRIDGE
LITTLEFIELD RIVER
ALFRED YORK COUNTY

BORING LOGS

SHEET NUMBER

6

OF 19

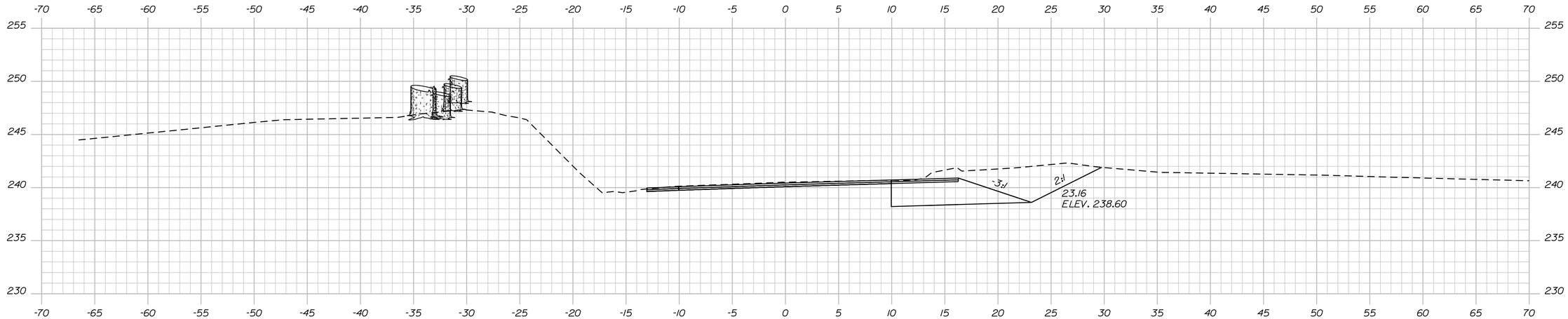

11+00.00
MATCH EXISTING
BEGIN TRANSITION

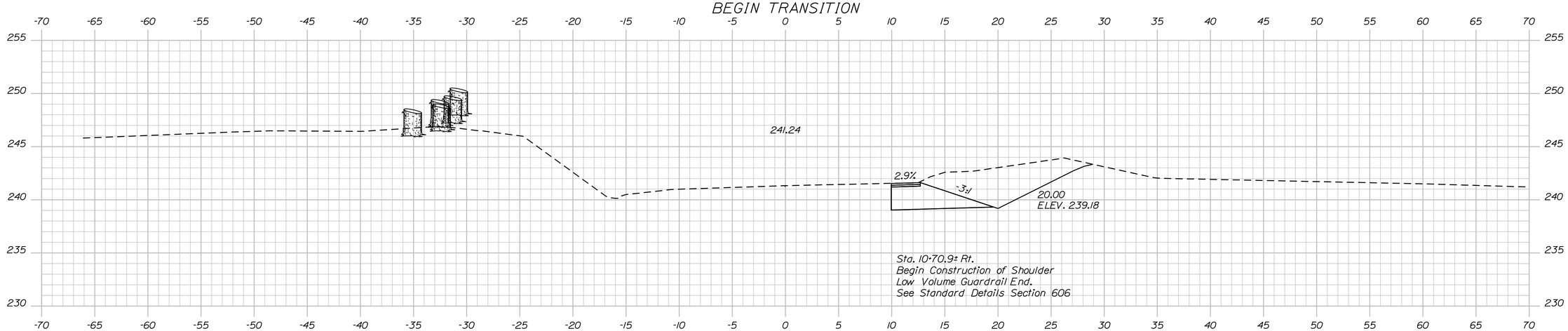

10+70.00
BEGIN SHOULDER RE-CONSTRUCTION

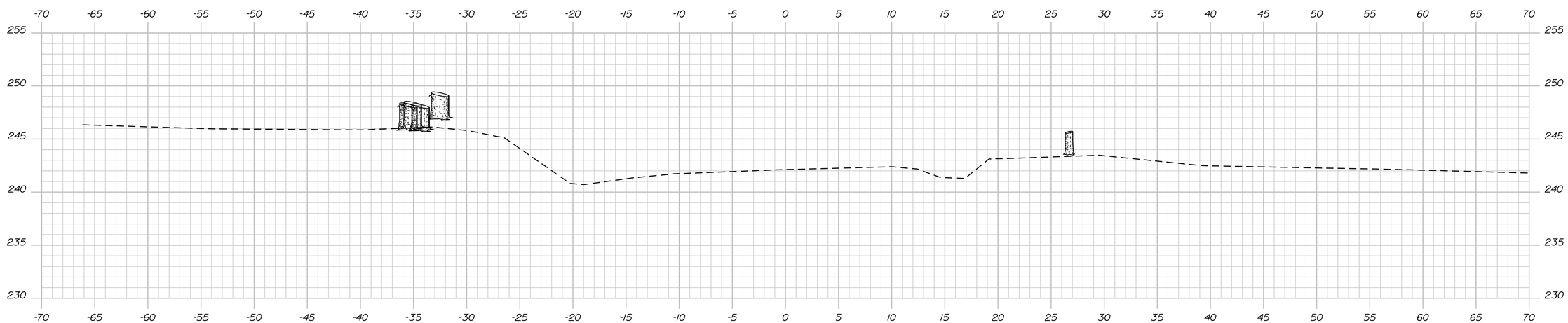

10+50.00

STATE OF MAINE
DEPARTMENT OF TRANSPORTATION

AC-BR-1667(700)X

PIN
16677.00

BRIDGE NO. 1271

BRIDGE PLANS

		BY	DATE
PROJ. MANAGER	JIM WENTWORTH		
DESIGN-DETAILED	KRC	MLB	APRIL 2010
CHECKED-REVIEWED	-----	DMD	APRIL 2010
DESIGN2-DETAILED2	-----	-----	-----
DESIGN3-DETAILED3	-----	-----	-----
REVISIONS 1	-----	-----	-----
REVISIONS 2	-----	-----	-----
REVISIONS 3	-----	-----	-----
REVISIONS 4	-----	-----	-----
FIELD CHANGES	-----	-----	-----

SIGNATURE

P.E. NUMBER

DATE

NUTTER'S BRIDGE
LITTLEFIELD RIVER
ALFRED YORK COUNTY

CROSS SECTIONS

SHEET NUMBER
7
OF 19

Sta. 10+50.00 to Sta. 11+00.00

Filename: ...\MSTA\007_XSECT_10+50_001.dgn Division: BRIDGE Username: michelle.boone Date:4/27/2010

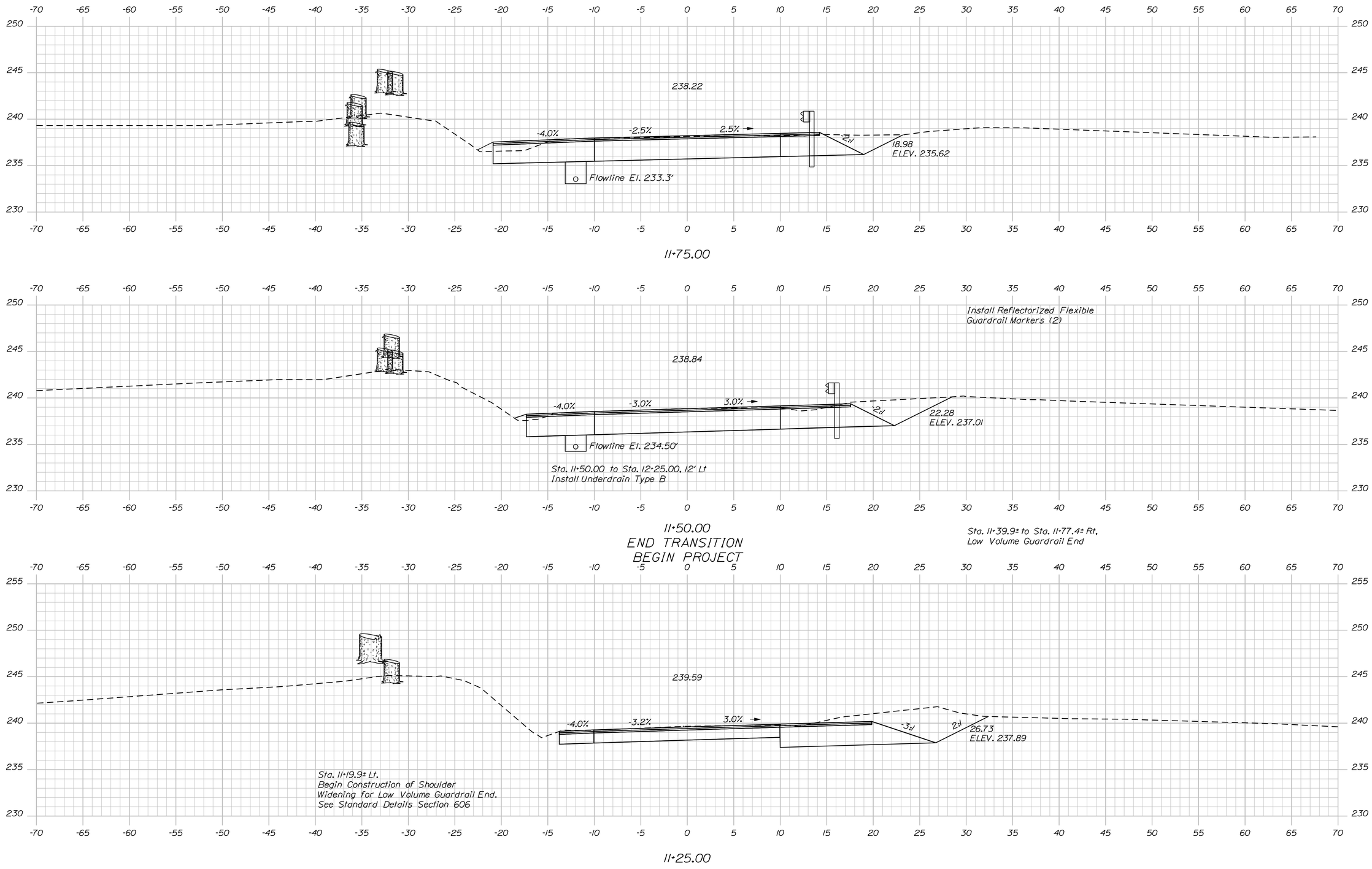

STATE OF MAINE
DEPARTMENT OF TRANSPORTATION

AC-BR-1667(700)X

PIN 16677.00

BRIDGE NO. 1271

BRIDGE PLANS

PROJ. MANAGER	JIM WENTWORTH		
DESIGN-DETAILED	KRC	MLB	APRIL 2010
CHECKED-REVIEWED	----	DMD	APRIL 2010
DESIGN2-DETAILED2	----	----	----
DESIGN3-DETAILED3	----	----	----
REVISIONS 1	----	----	----
REVISIONS 2	----	----	----
REVISIONS 3	----	----	----
REVISIONS 4	----	----	----
FIELD CHANGES	----	----	----

SIGNATURE

P.E. NUMBER

DATE

NUTTER'S BRIDGE
LITTLEFIELD RIVER
ALFRED YORK COUNTY

CROSS SECTIONS

SHEET NUMBER

8

OF 19

Sta. 11+25.00 to Sta. 11+75.00

Filename: ...\MSTA\008_XSECT_11+25_002.dgn Division: BRIDGE Username: michelle.boone Date:4/27/2010

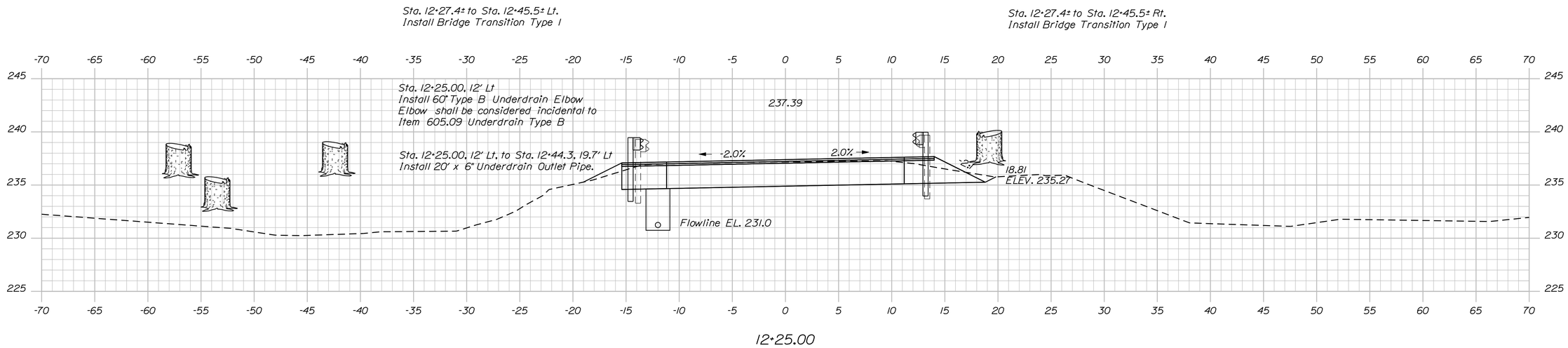

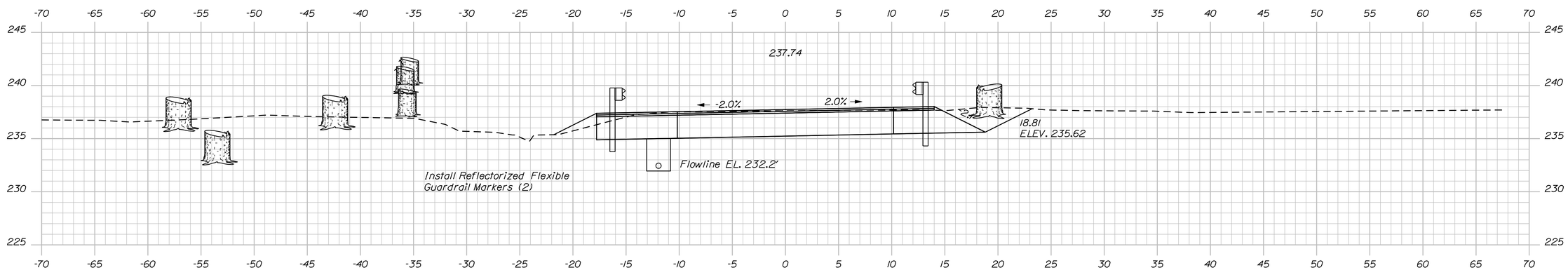

Sta. 11+89.9± to Sta. 11+27.4± Lt.
Install Low Volume Guardrail End

STATE OF MAINE
DEPARTMENT OF TRANSPORTATION

AC-BR-1667(700)X

PIN 16677.00

BRIDGE NO. 1271

BRIDGE PLANS

PROJ. MANAGER JIM WENTWORTH		BY	DATE
DESIGN-DETAILED	KRC	MLB	APRIL 2010
CHECKED-REVIEWED	----	DMD	APRIL 2010
DESIGN2-DETAILED2	----	----	----
DESIGN3-DETAILED3	----	----	----
REVISIONS 1	----	----	----
REVISIONS 2	----	----	----
REVISIONS 3	----	----	----
REVISIONS 4	----	----	----
FIELD CHANGES	----	----	----

SIGNATURE

P.E. NUMBER

DATE

NUTTER'S BRIDGE
LITTLEFIELD RIVER
ALFRED YORK COUNTY

CROSS SECTIONS

SHEET NUMBER
9
OF 19

Sta. 12+00.00 to Sta. 12+44.61

Filename: ...\MSTA\009_XSECT_12+00_003.dgn Division: BRIDGE Username: michelle.boone Date:4/27/2010

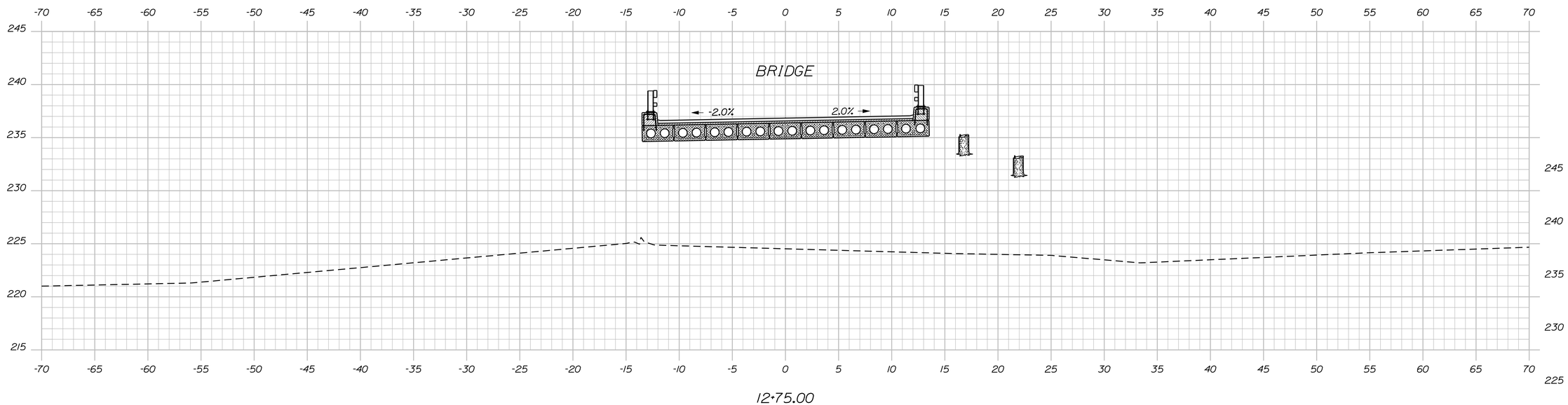

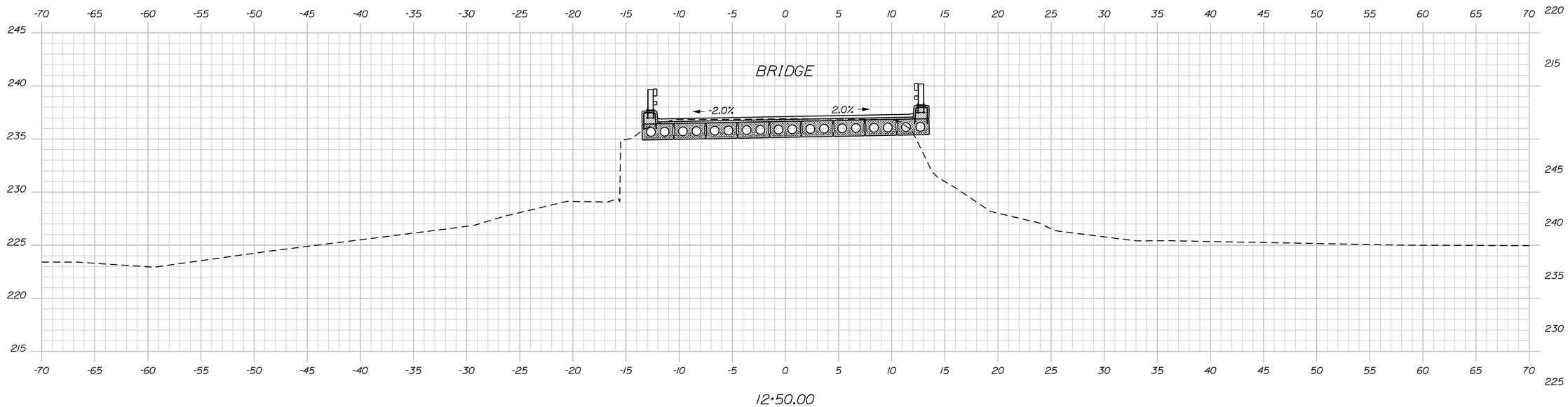

STATE OF MAINE
DEPARTMENT OF TRANSPORTATION

AC-BR-1667(700)X

PIN 16677.00

BRIDGE NO. 1271

BRIDGE PLANS

PROJ. MANAGER JIM WENTWORTH		BY	DATE
DESIGN-DETAILED	KRC	MLB	APRIL 2010
CHECKED-REVIEWED	------	DMD	APRIL 2010
DESIGN2-DETAILED2	------	------	------
DESIGN3-DETAILED3	------	------	------
REVISIONS 1	------	------	------
REVISIONS 2	------	------	------
REVISIONS 3	------	------	------
REVISIONS 4	------	------	------
FIELD CHANGES	------	------	------

SIGNATURE

P.E. NUMBER

DATE

NUTTER'S BRIDGE
LITTLEFIELD RIVER
ALFRED YORK COUNTY

CROSS SECTIONS

SHEET NUMBER

10

OF 19

Sta. 12+50.00 to Sta. 12+75.00

Filename: ...\MSTA\010_XSECT_12+50_004.dgn Division: BRIDGE Username: michelle.boone Date:4/27/2010

Sta. 13+06.6± to Sta. 13+56.6± Lt.
Install Guardrail ~ Single Rail Type 3

Sta. 13+06.6± to Sta. 13+68.1± Rt.
Install Guardrail ~ Single Rail Type 3

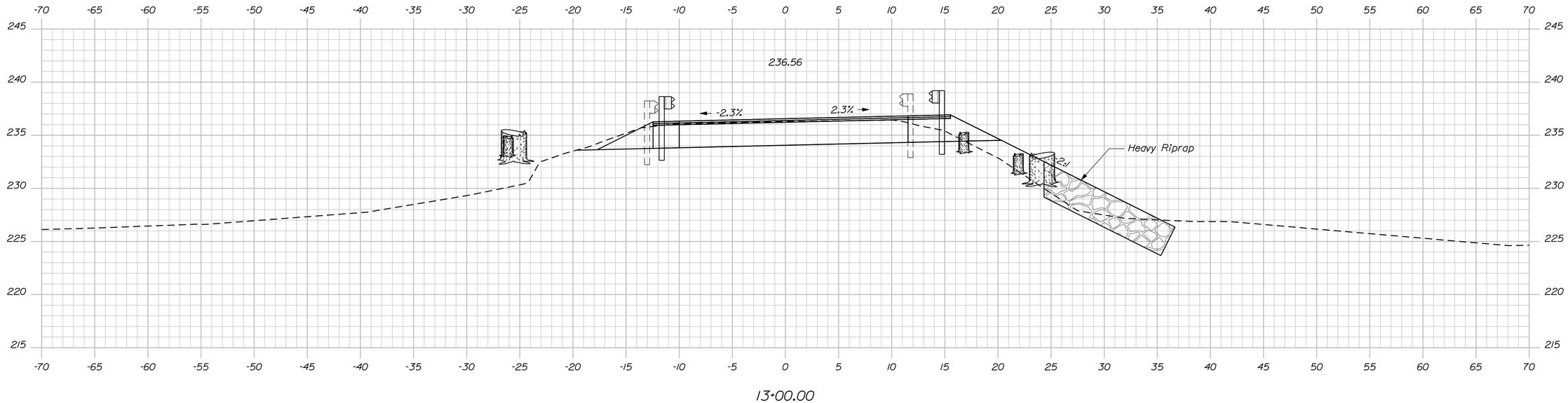

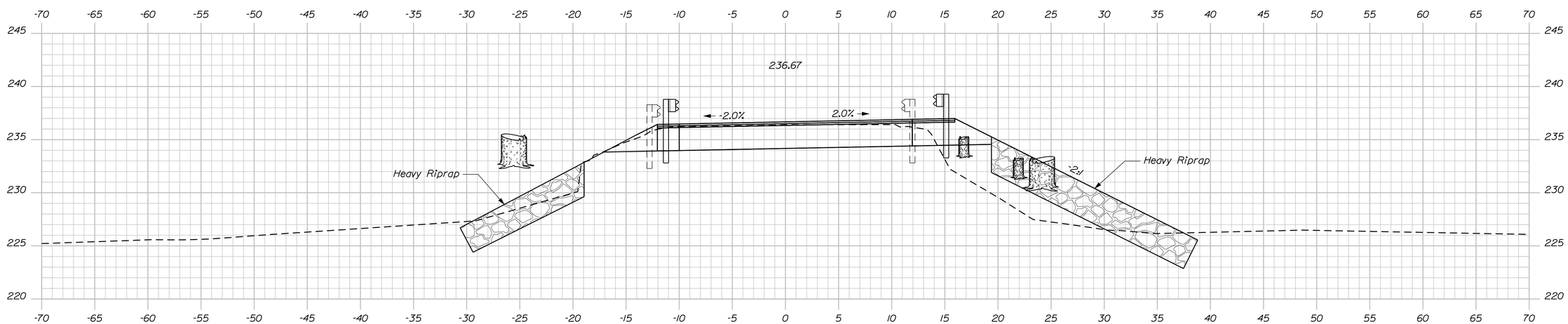

Sta. 12+88.5± to Sta. 13+06.6± Lt.
Install Bridge Transition Type 1

Sta. 12+88.5± to Sta. 13+06.6± Rt.
Install Bridge Transition Type 1

STATE OF MAINE
DEPARTMENT OF TRANSPORTATION

AC-BR-1667(700)X

PIN 16677.00

BRIDGE NO. 1271

BRIDGE PLANS

		BY	DATE
PROJ. MANAGER JIM WENTWORTH			
DESIGN-DETAILED	KRC	MLB	APRIL 2010
CHECKED-REVIEWED	------	DMD	APRIL 2010
DESIGN2-DETAILED2	------	------	------
DESIGN3-DETAILED3	------	------	------
REVISIONS 1	------	------	------
REVISIONS 2	------	------	------
REVISIONS 3	------	------	------
REVISIONS 4	------	------	------
FIELD CHANGES	------	------	------

SIGNATURE

P.E. NUMBER

DATE

NUTTER'S BRIDGE
LITTLEFIELD RIVER
ALFRED YORK COUNTY

CROSS SECTIONS

SHEET NUMBER

11

OF 19

Sta. 12+90.00 to Sta. 13+00.00

Filename: ...\MSTA\011_XSECT_12+90_005.dgn Division: BRIDGE Username: michelle.boone Date:4/27/2010

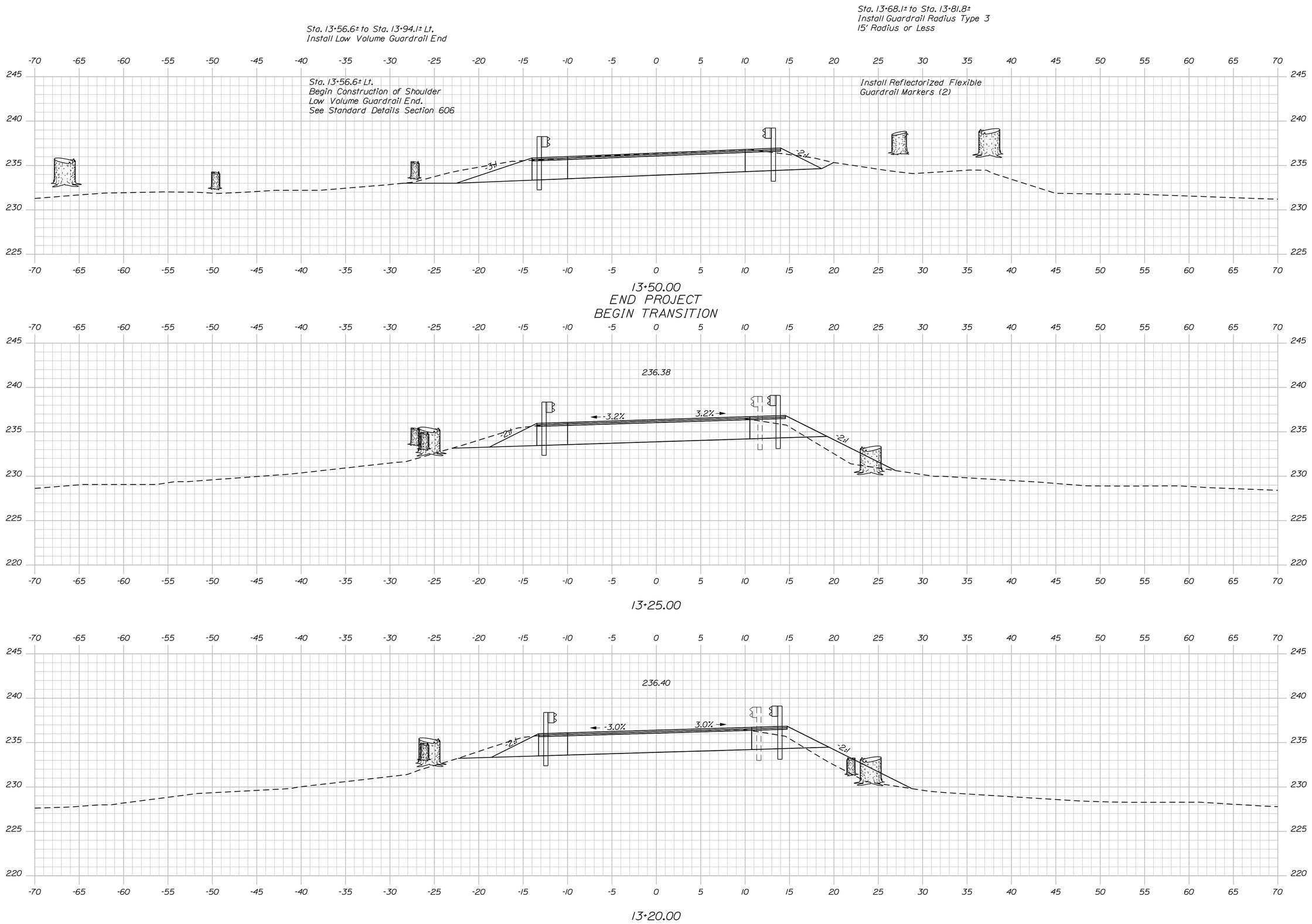

STATE OF MAINE
DEPARTMENT OF TRANSPORTATION

AC-BR-1667(700)X

PIN 16677.00

BRIDGE NO. 1271

BRIDGE PLANS

		BY	DATE
PROJ. MANAGER	JIM WENTWORTH		
DESIGN-DETAILED	KRC	MLB	APRIL 2010
CHECKED-REVIEWED	-----	DMD	APRIL 2010
DESIGN2-DETAILED2	-----	-----	-----
DESIGN3-DETAILED3	-----	-----	-----
REVISIONS 1	-----	-----	-----
REVISIONS 2	-----	-----	-----
REVISIONS 3	-----	-----	-----
REVISIONS 4	-----	-----	-----
FIELD CHANGES	-----	-----	-----

SIGNATURE

P.E. NUMBER

DATE

NUTTER'S BRIDGE
LITTLEFIELD RIVER
ALFRED YORK COUNTY

CROSS SECTIONS

SHEET NUMBER

12

OF 19

Filename: ...\MSTA\012_XSECT_13-20_006.dgn Division: BRIDGE Username: michelle.boone Date:4/27/2010

Sta. 13+20.00 to Sta. 13+50.00

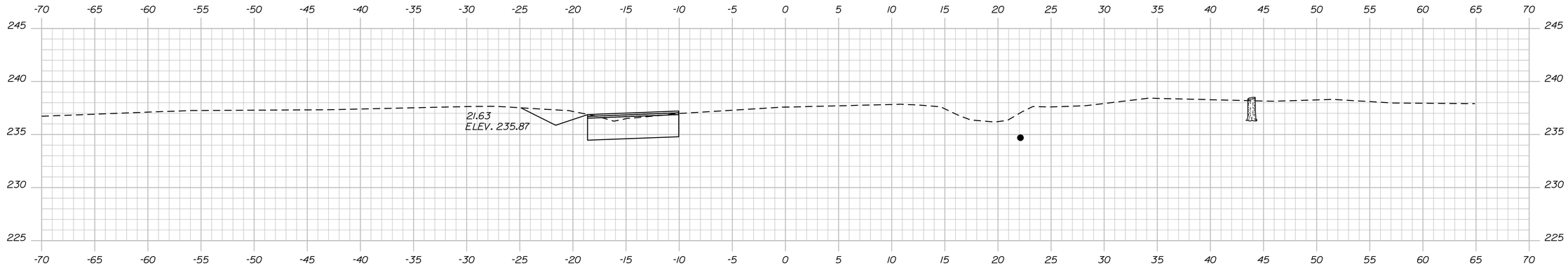

14+25.00

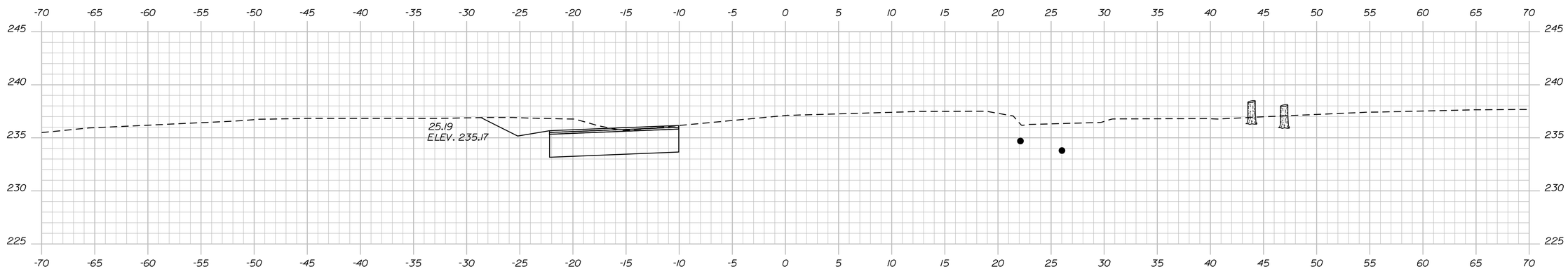

14+00.00

13+82.00
END TRANSTION
MATCH EXISTING
BEGIN SHOULDER RE-CONSTRUCTION

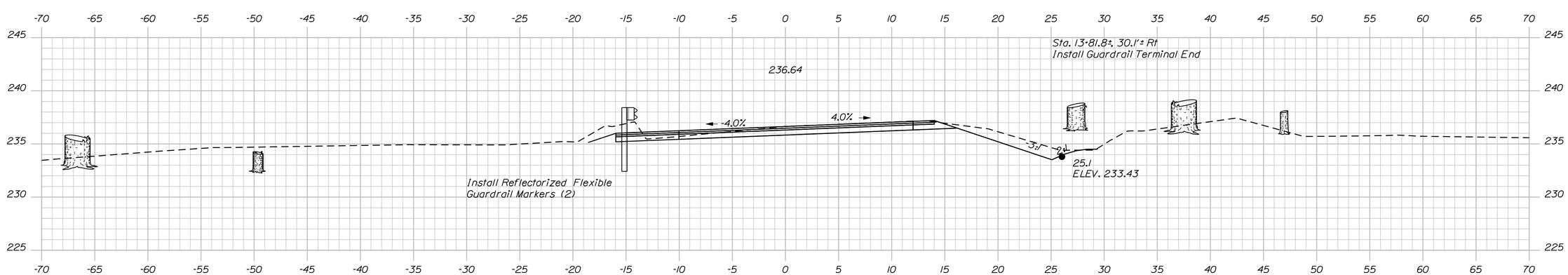

13+75.00

STATE OF MAINE
DEPARTMENT OF TRANSPORTATION

AC-BR-1667(700)X

PIN
16677.00

BRIDGE NO. 1271

BRIDGE PLANS

	BY	DATE
PROJ. MANAGER JIM WENTWORTH		
DESIGN-DETAILED KRC	MLB	APRIL 2010
CHECKED-REVIEWED	DMD	APRIL 2010
DESIGN2-DETAILED2		
DESIGN3-DETAILED3		
REVISIONS 1		
REVISIONS 2		
REVISIONS 3		
REVISIONS 4		
FIELD CHANGES		

SIGNATURE

P.E. NUMBER

DATE

NUTTER'S BRIDGE
LITTLEFIELD RIVER
ALFRED YORK COUNTY

CROSS SECTIONS

SHEET NUMBER
13
OF 19

Sta. 13+75.00 to Sta. 14+25.00

Filename: ...\MSTA\013_XSECT_13+75_007.dgn Division: BRIDGE Username: michelle.boone Date:4/27/2010

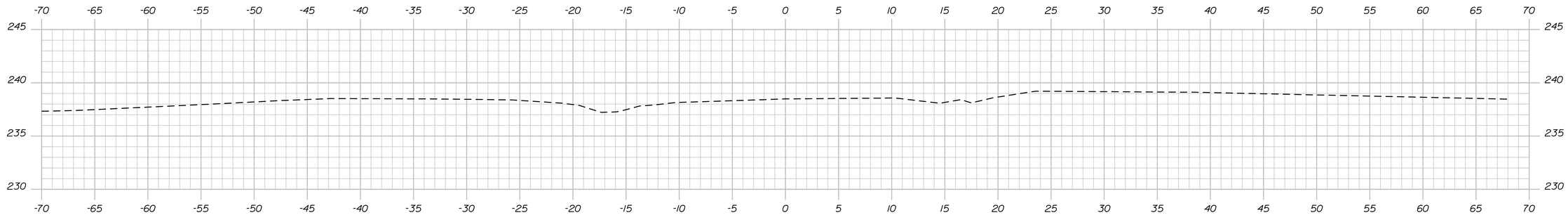

14+63.33

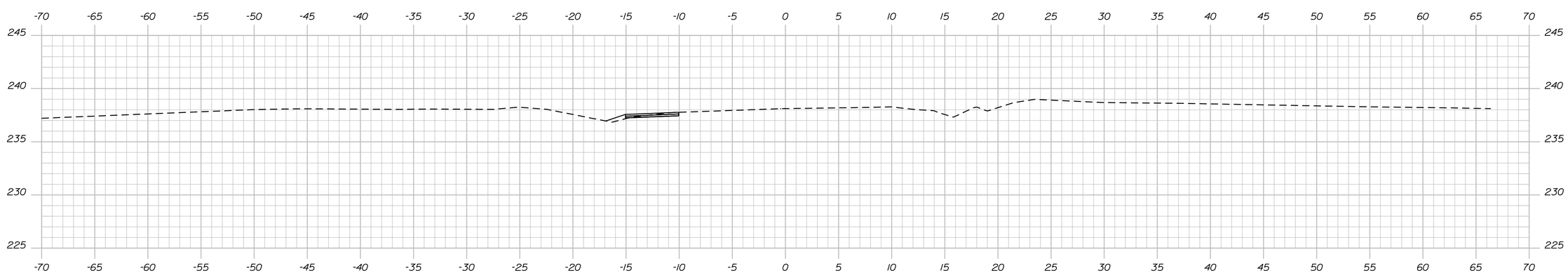

14+50.00

END SHOULDER REHAB
MATCH EXISTING

STATE OF MAINE
DEPARTMENT OF TRANSPORTATION

AC-BR-1667(700)X

PIN
16677.00

BRIDGE NO. 1271

BRIDGE PLANS

		BY	DATE
PROJ. MANAGER	JIM WENTWORTH		
DESIGN-DETAILED	KRC	MLB	APRIL 2010
CHECKED-REVIEWED	-----	DMD	APRIL 2010
DESIGN2-DETAILED2	-----	-----	-----
DESIGN3-DETAILED3	-----	-----	-----
REVISIONS 1	-----	-----	-----
REVISIONS 2	-----	-----	-----
REVISIONS 3	-----	-----	-----
REVISIONS 4	-----	-----	-----
FIELD CHANGES	-----	-----	-----

SIGNATURE

P.E. NUMBER

DATE

NUTTER'S BRIDGE
LITTLEFIELD RIVER
ALFRED YORK COUNTY

CROSS SECTIONS

SHEET NUMBER

14

OF 19

Sta. 14+50.00 to Sta. 14+63.33

Filename: ...\MSTA\014_XSECT_14+50_008.dgn Division: BRIDGE Username: michelle.boone Date:4/27/2010

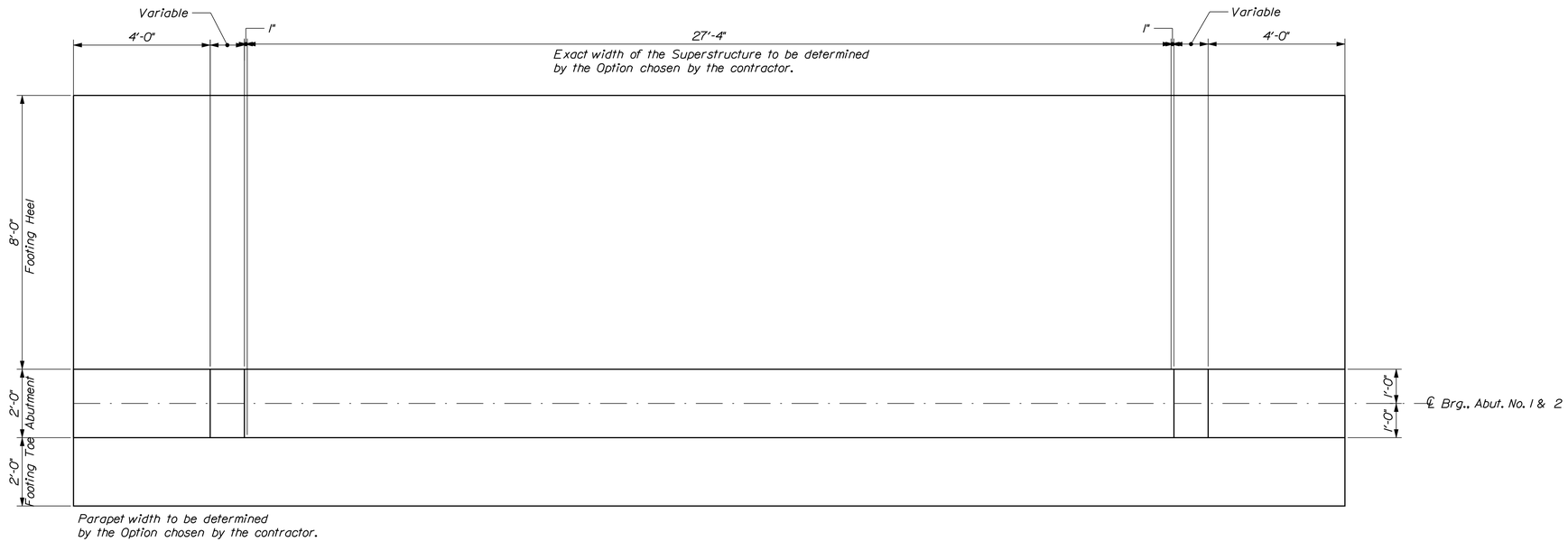

ABUTMENT/FOOTING PLAN

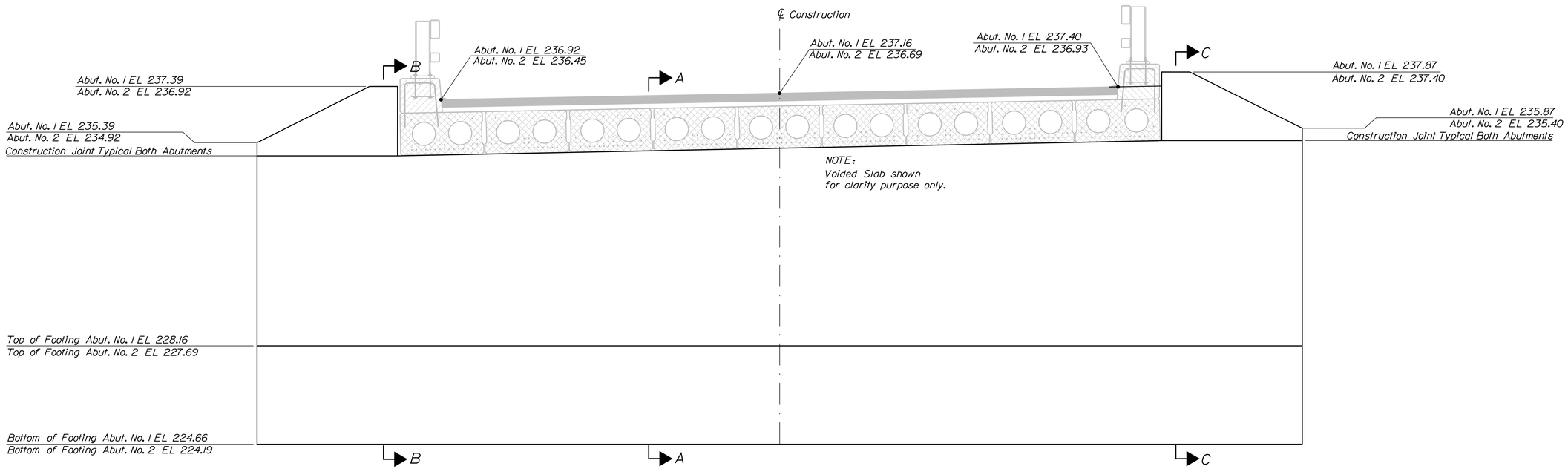

ABUTMENT/FOOTING ELEVATION

Abut. No. 2 is a mirror
imagine of Abut. No. 1

STATE OF MAINE
DEPARTMENT OF TRANSPORTATION

AC-BR-1667(700)X

PIN
16677.00

BRIDGE NO. 1271

BRIDGE PLANS

PROJ. MANAGER JIM WENTWORTH		BY	DATE
DESIGN-DETAILED	KRC	MLB	APRIL 2010
CHECKED-REVIEWED	------	DMD	APRIL 2010
DESIGN2-DETAILED2	------	------	------
DESIGN3-DETAILED3	------	------	------
REVISIONS 1	------	------	------
REVISIONS 2	------	------	------
REVISIONS 3	------	------	------
REVISIONS 4	------	------	------
FIELD CHANGES	------	------	------

SIGNATURE

P.E. NUMBER

DATE

NUTTER'S BRIDGE
LITTLEFIELD RIVER
ALFRED YORK COUNTY

ABUTMENT PLAN

SHEET NUMBER

15

OF 19

Filename: ...\MSTA\015_Abutmentplan.dgn Division: BRIDGE Username: michelle.boone Date:4/27/2010

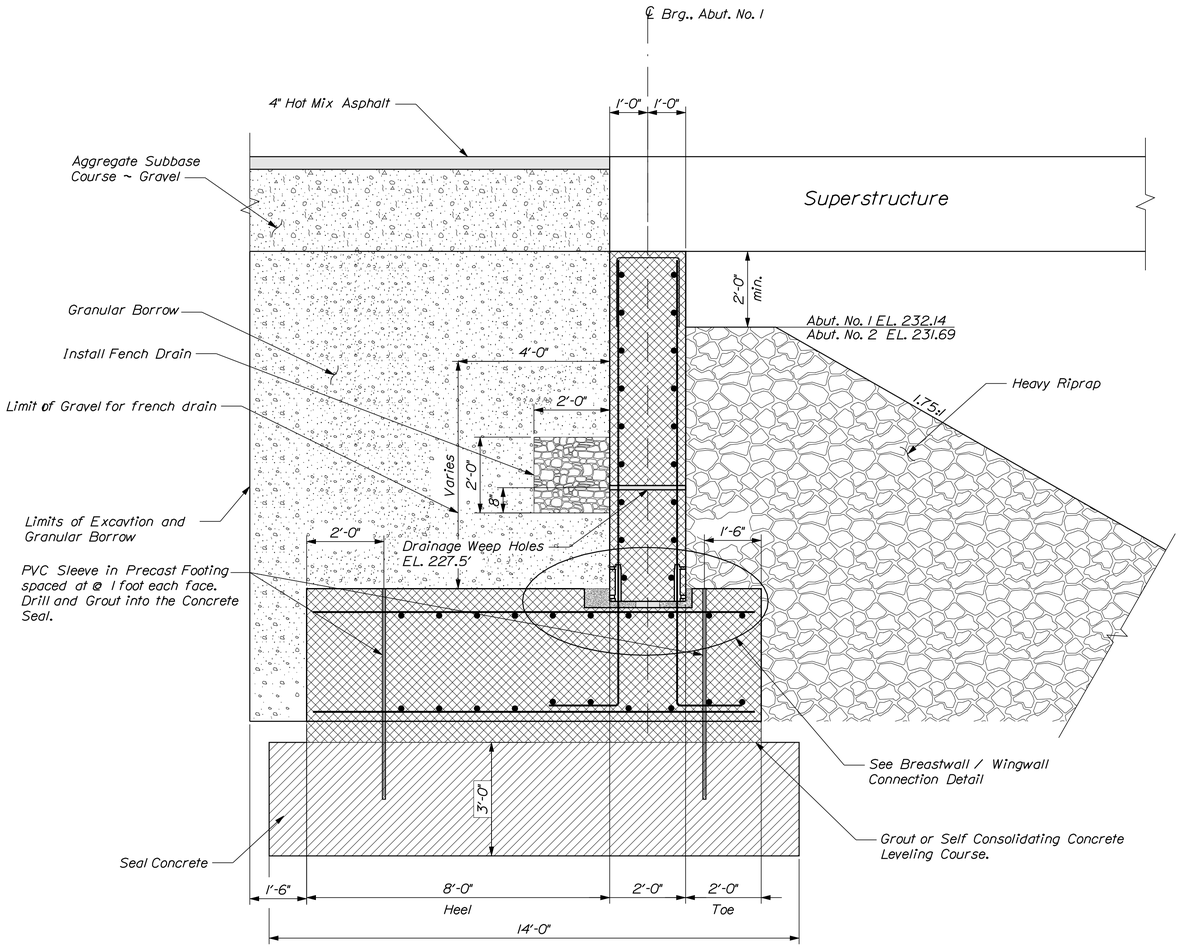

ABUTMENT SECTION

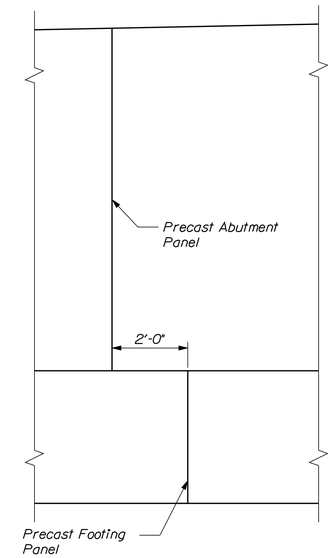

PRECAST JOINT DETAIL

NOTE:
Offset Precast Abutment Joints and Precast Footing Joints by 2' (min.)

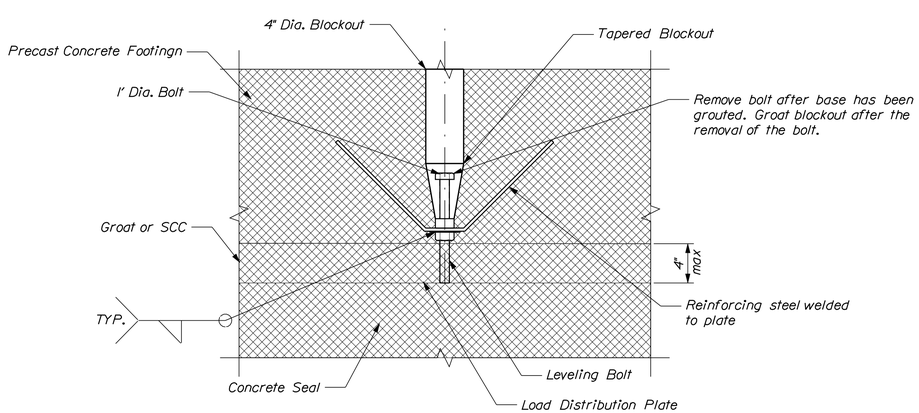

PRECAST FOOTING TO SUBFOOTING CONECTION

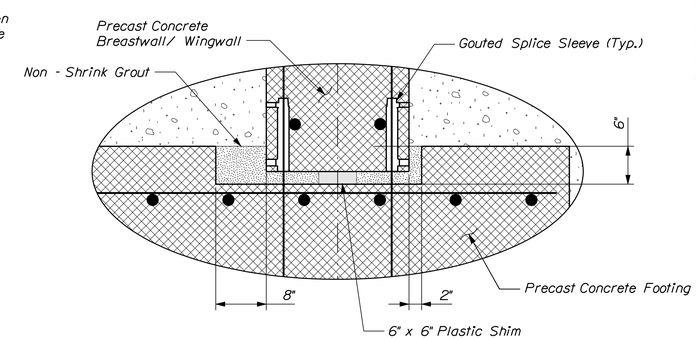

BREASTWALL / WINGWALL CONNECTION DETAIL

ABUTMENT NOTES

1. The maximum factored applied Seal pressure is 5.9 ksf.

2. Structural Earth Excavation, Abutments and Retaining Walls, required more than 12 inches below the bottom of the structure, will be paid for in accordance with Standard Specifications Section 206, Structural Excavation.

3. Reinforcing steel shall have a minimum concrete cover of 2 inches in the walls and 3 inches in the footings unless otherwise noted.

4. Place 4-in. diameter drains in the breastwall and wingwalls at 10-ft maximum spacing. The exact location will be determined by the Resident.

5. To ensure an accurate match with the superstructure, the parapet portions of the wingwalls shall be placed after erection of the precast units. This shall be considered incidental to the precast abutments.

6. Cover joints where waterstops are not required in accordance with Standard Details Section 502.

7. Construct French Drains behind the abutments and wingwalls in accordance with Standard Specifications Section 512, French Drains.

8. Abutments, wingwalls and their footings shall be backfilled with Granular Borrow. Pay limits will be the structural excavation limits in cut areas and a vertical plane located 10 feet behind the walls in fill areas.

9. Roughen the top surface of the seal concrete prior to pouring footing concrete

Seal Notes:

1. The seal concrete placement dimensions represent the minimum seal size necessary to meet design requirements and are not based on the use of any particular sheet pile section.

2. The horizontal pay limits for seal concrete, structural earth excavation, and disposal of excavation shall be to the dimensions shown on the plans. No additional payment will be made for concrete placement, excavation or disposal outside of these limits.

3. When sheet piling is used for seal cofferdams, appropriate rolled corners shall be used and the inside face of the sheet piling shall be at or outside of the seal concrete dimensions shown.

4. The depth of the seal is set for a water elevation of 227.5'. If the water elevation at the time of construction is higher, the depth of the seal shall be adjusted.

5. The removal of layers of wood and/or cobbles and boulders is anticipated during excavation for the seal and abutment placements. These materials shall be removed by conventional excavation equipment. No additional payment will be made for excavation of these materials.

6. Care shall be taken not to disturb the bottom of the excavation. No excavation shall be performed below the elevations shown on the plans unless directed by the Resident in writing. Any material excavated without authority shall be replaced with approved backfill which shall be thoroughly compacted in accordance with the Standard Specifications at no additional cost to the Department.

8. If poor foundation material is encountered at the foundation design elevation, it shall be removed as Cofferdam Excavation and shall be replaced with approved backfill which shall be thoroughly compacted in accordance with the Standard Specifications and approved by the Resident.

9. The minimum allowable seal thickness is 3 ft. Any bedrock that protrudes above this depth shall be removed or the top of the seal must be raised or stepped. Any changes shall be made under the direction of the Resident. For more information see regarding bedrock elevations see the Boring Location Plan and Interpretive Subsurface Profile Sheet. Payment for adjusting the seal depth shall be considered incidental to related contact items. Payment for rock removal will be made under Pay Item 206.09 - Structural Rock Excavation.

10. The method of placing dowels in the seal concrete shall be approved by the Resident. See Sheet 16 for dowel details.

11. The anchoring material shall be one of the products listed on the MaineDOT List of Prequalified Type 3 Anchoring Materials. Installation shall be in accordance with the Manufacturer's recommendations. Anchored rebar shall achieve a minimum unconfined pull out strength of 36 kips.

STATE OF MAINE
DEPARTMENT OF TRANSPORTATION

AC-BR-1667(700)X

PIN 16677.00

BRIDGE NO. 1271

BRIDGE PLANS

		BY	DATE
PROJ. MANAGER JIM WENTWORTH			
DESIGN-DETAILED	KRC	MLB	APRIL 2010
CHECKED-REVIEWED	----	DMD	APRIL 2010
DESIGN2-DETAILED2	----	----	----
DESIGN3-DETAILED3	----	----	----
REVISIONS 1	----	----	----
REVISIONS 2	----	----	----
REVISIONS 3	----	----	----
REVISIONS 4	----	----	----
FIELD CHANGES	----	----	----

SIGNATURE

P.E. NUMBER

DATE

NUTTER'S BRIDGE
LITTLEFIELD RIVER
ALFRED YORK COUNTY

ABUTMENT DETAILS

SHEET NUMBER
16
OF 19

Filename: ...\msla\016_Abutment_details.dgn Division: BRIDGE Username: michelle.boone Date:4/27/2010

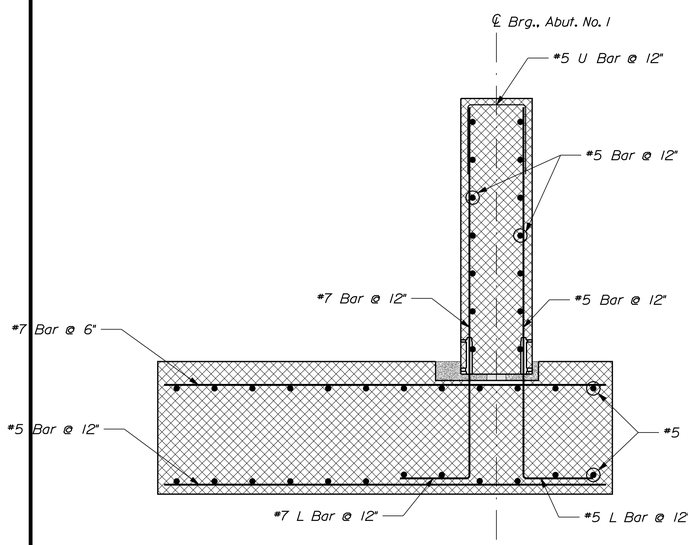

SECTION A-A

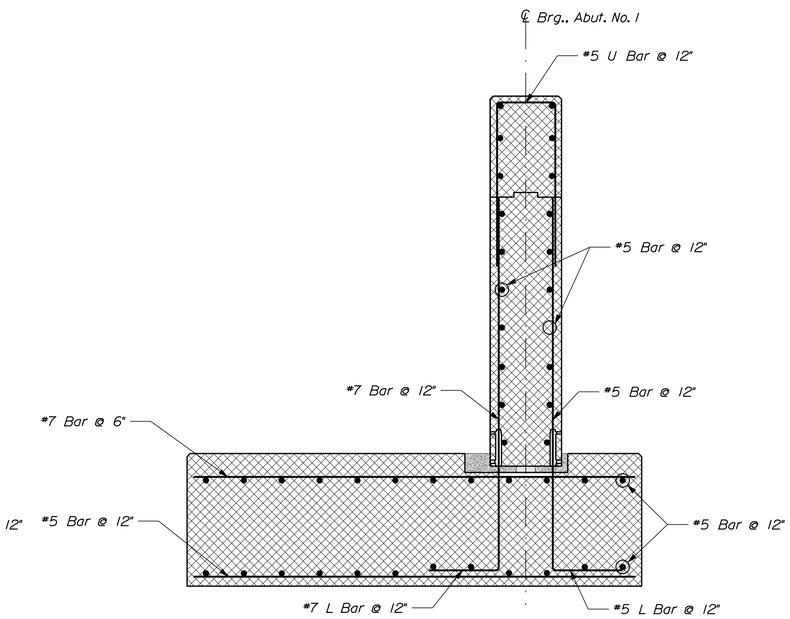

SECTION B-B

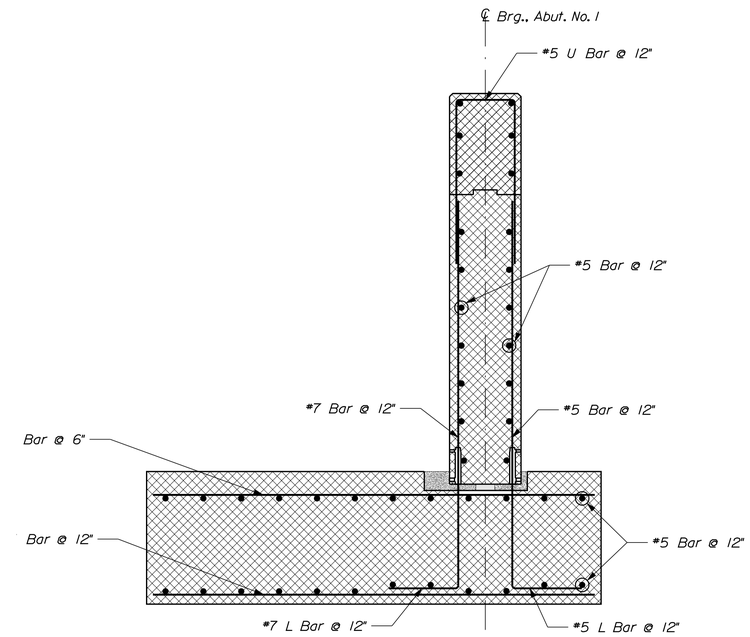

SECTION C-C

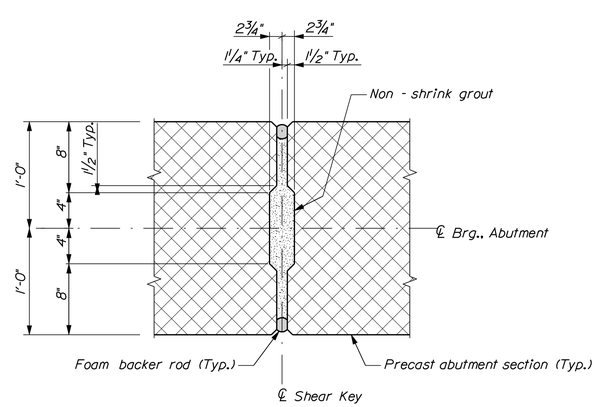

VERTICAL CONSTRUCTION JOINT DETAIL

(Abutment Wall Shear Key)

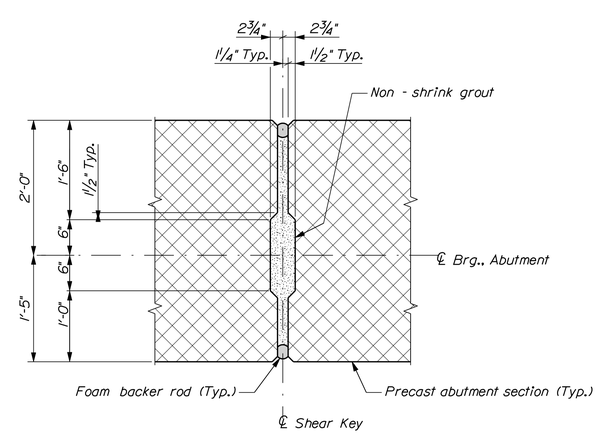

VERTICAL CONSTRUCTION JOINT DETAIL

(Footing Shear Key)

STATE OF MAINE
DEPARTMENT OF TRANSPORTATION

AC-BR-1667(700)X

PIN 16677.00

BRIDGE NO. 1271

BRIDGE PLANS

		BY	DATE
PROJ. MANAGER	JM MENTWORTH		
DESIGN-DETAILED	KRC	MLB	APRIL 2010
CHECKED-REVIEWED	----	DMD	APRIL 2010
DESIGN2-DETAILED2	----	----	----
DESIGN3-DETAILED3	----	----	----
REVISIONS 1	----	----	----
REVISIONS 2	----	----	----
REVISIONS 3	----	----	----
REVISIONS 4	----	----	----
FIELD CHANGES	----	----	----

SIGNATURE

P.E. NUMBER

DATE

NUTTER'S BRIDGE
LITTLEFIELD RIVER
ALFRED YORK COUNTY

ABUTMENT REINFORCING

SHEET NUMBER

17

OF 19

Filename: ...\017_Abutment_reinforcing.dgn Division: BRIDGE Username: michelle.boone Date:4/27/2010

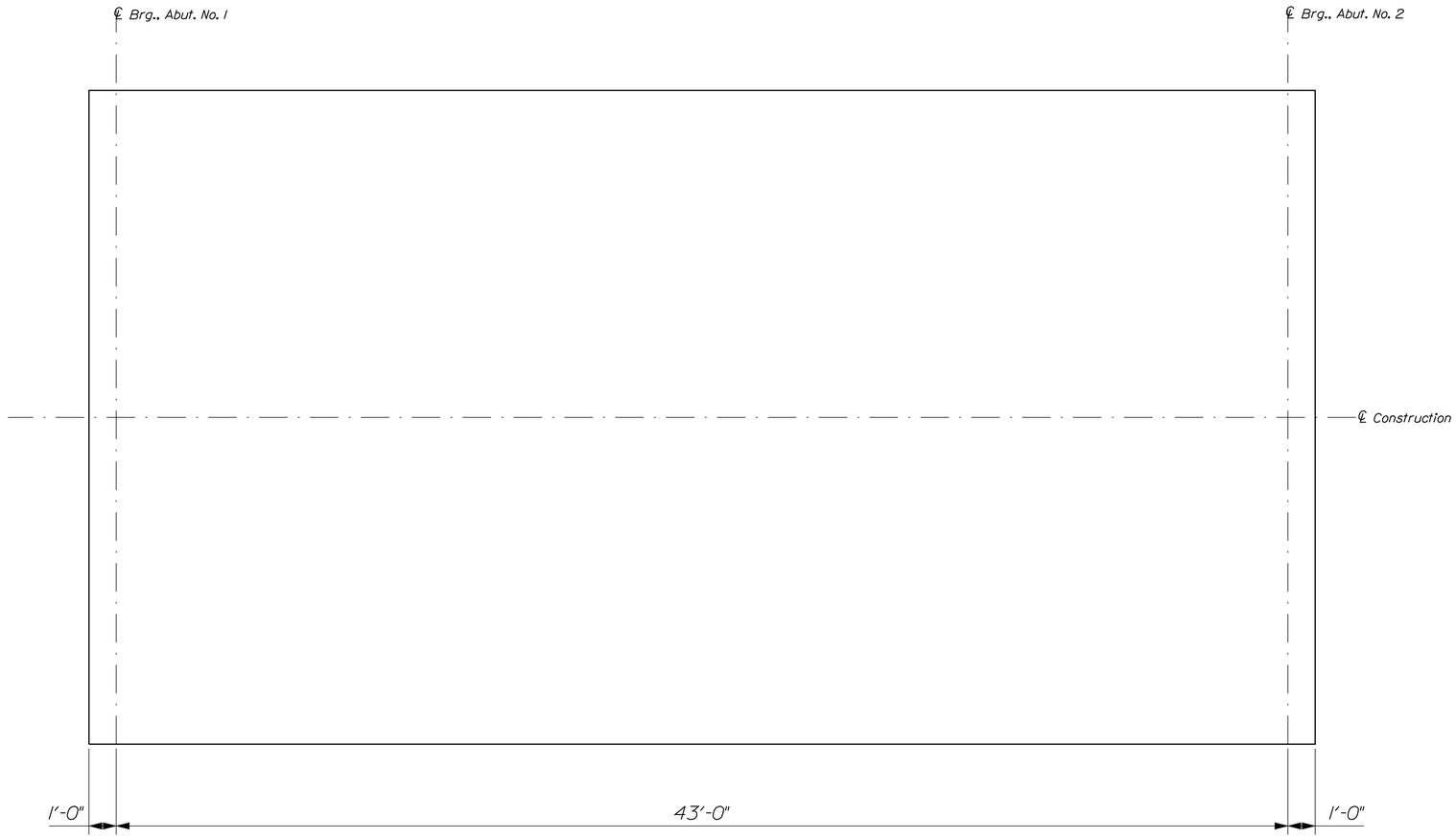

SUPERSTRUCTURE PLAN

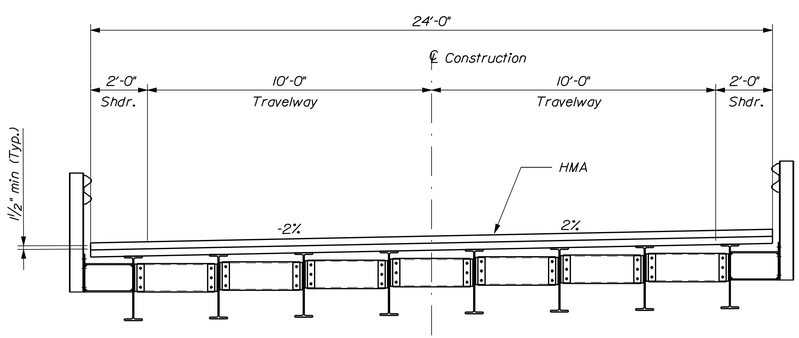

PREFABRICATED BRIDGE

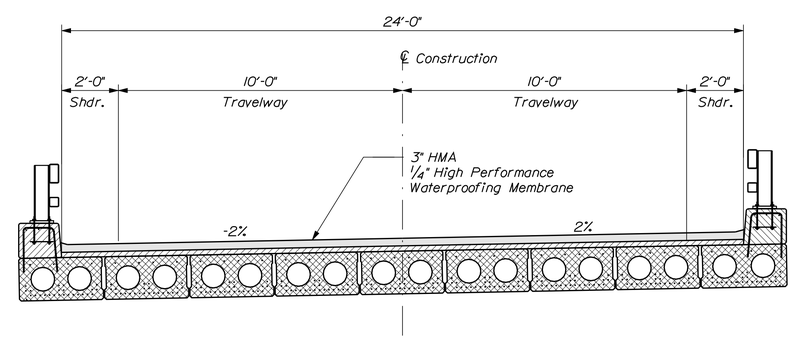

VOIDED SLAB

STATE OF MAINE
DEPARTMENT OF TRANSPORTATION

AC-BR-1667(700)X

PIN
16677.00

BRIDGE NO. 1271

BRIDGE PLANS

PROJ. MANAGER	JIM WENTWORTH	BY	DATE
DESIGN-DETAILED	KRC	MLB	APRIL 2010
CHECKED-REVIEWED	------	DMD	APRIL 2010
DESIGN2-DETAILED2	------	------	------
DESIGN3-DETAILED3	------	------	------
REVISIONS 1	------	------	------
REVISIONS 2	------	------	------
REVISIONS 3	------	------	------
REVISIONS 4	------	------	------
FIELD CHANGES	------	------	------

SIGNATURE

P.E. NUMBER

DATE

NUTTER'S BRIDGE
LITTLEFIELD RIVER
ALFRED YORK COUNTY

GENERAL SECTIONS

SHEET NUMBER

18

OF 19

Filename: ...\018_Proposedsuperstructure.dgn Division: BRIDGE Username: michelle.boone Date:4/27/2010

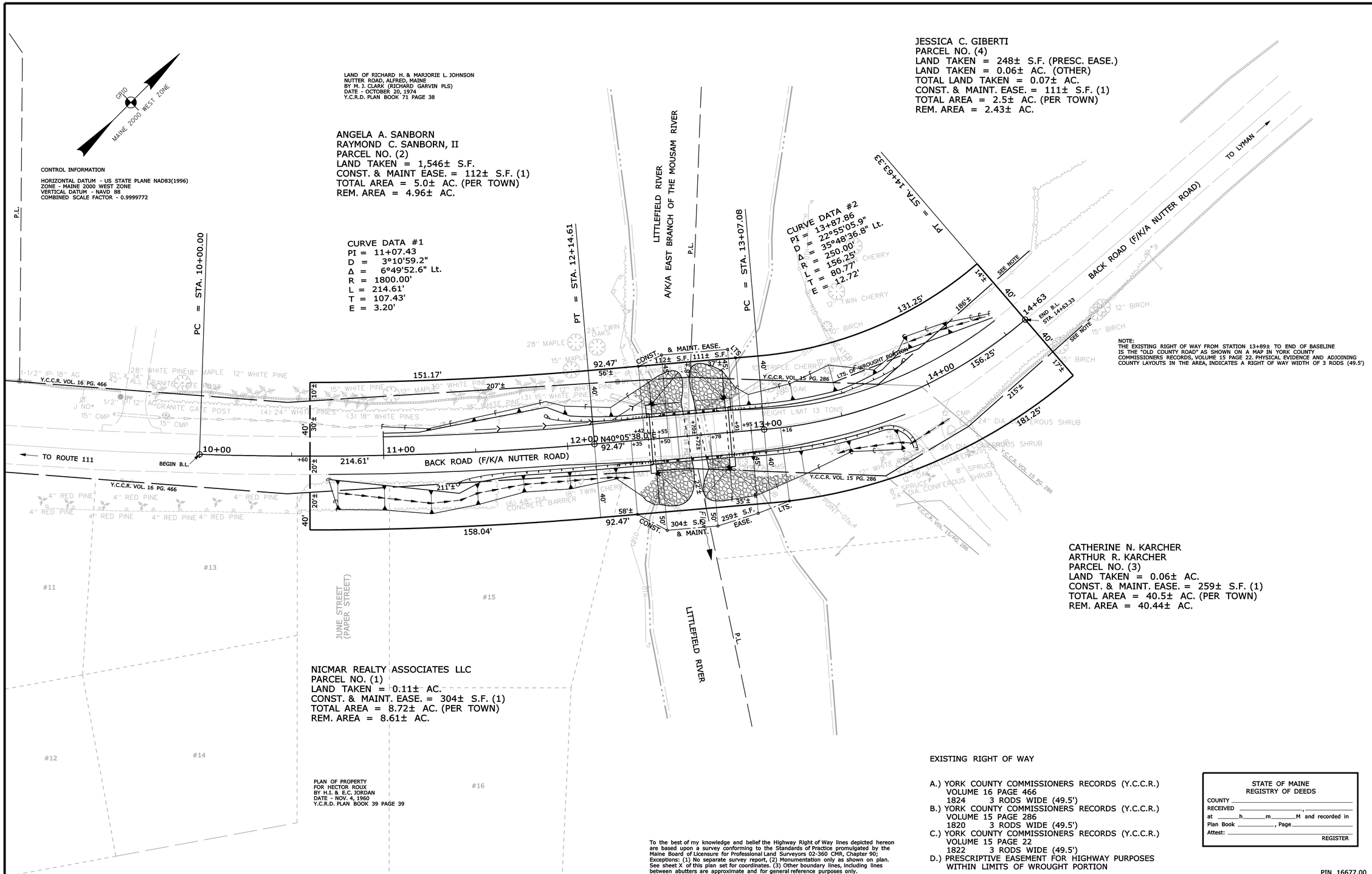

NOTE:
THE EXISTING RIGHT OF WAY FROM STATION 13+89± TO END OF BASELINE 15 THE "OLD COUNTY ROAD" AS SHOWN ON A MAP IN YORK COUNTY COMMISSIONERS RECORDS, VOLUME 15 PAGE 22, PHYSICAL EVIDENCE AND ADJOINING COUNTY LAYOUTS IN THE AREA, INDICATES A RIGHT OF WAY WIDTH OF 3 RODS (49.5')

EXISTING RIGHT OF WAY

A.) YORK COUNTY COMMISSIONERS RECORDS (Y.C.C.R.)
VOLUME 16 PAGE 466
1824 3 RODS WIDE (49.5')
B.) YORK COUNTY COMMISSIONERS RECORDS (Y.C.C.R.)
VOLUME 15 PAGE 286
1820 3 RODS WIDE (49.5')
C.) YORK COUNTY COMMISSIONERS RECORDS (Y.C.C.R.)
VOLUME 15 PAGE 22
1822 3 RODS WIDE (49.5')
D.) PRESCRIPTIVE EASEMENT FOR HIGHWAY PURPOSES WITHIN LIMITS OF WROUGHT PORTION

To the best of my knowledge and belief the Highway Right of Way lines depicted hereon are based upon a survey conforming to the Standards of Practice promulgated by the Maine Board of Licensure for Professional Land Surveyors 02-360 CMR, Chapter 90; Exceptions: (1) No separate survey report, (2) Monumentation only as shown on plan. See sheet X of this plan set for coordinates. (3) Other boundary lines, including lines between abutters are approximate and for general reference purposes only.

STATE OF MAINE
REGISTRY OF DEEDS
COUNTY _____
RECEIVED _____, _____
at _____h_____m_____M and recorded in
Plan Book _____, Page _____
Attest: _____
REGISTER

PIN 16677.00

SYMBOLS

- IP or IPF (IRON PIPE or PIN FOUND)
- S.T. (SEPTIC TANK)
- (ROW MONUMENT)
- &BM (TRAVERSE POINT)
- WELL
- GRADING LIMIT LINE
- CONSTRUCTION LIMIT LINE
- PROPERTY LINE
- LIMITS OF "WROUGHT" PORTION (L.O.W.P.)
- EXISTING RIGHT OF WAY
- NEW RIGHT OF WAY
- NEW ROW WITHIN EXIST. ROW
- CONTROL OF ACCESS
- WATER LINE
- GAS LINE
- ELECTRIC LINE
- TELEPHONE LINE
- SEWER LINE

ITEM	TECH	CHECKED
BASE MAP	G.L.L.	C.W.K.
EXIST. R/W	G.L.L.	C.W.K.
PROP. LINES	G.L.L.	J.C.C.
AREAS	G.L.L.	J.C.C.

STATE OF MAINE
DEPARTMENT OF TRANSPORTATION
16 STATE HOUSE STATION - AUGUSTA, ME 04333-0016
ALFRED
RIGHT OF WAY MAP

REVISIONS

NO.	DATE	DESCRIPTION	BY

PLAN FILED IN PLAN BOOK PAGE COUNTY RECORD

NO.	GRANTOR	INSTRUMENT	DATE	BOOK	PAGE
		COND.	4/12/10	15844	307

DAVID A. COLE
COMMISSIONER
KENNETH L. SWEENEY
CHIEF ENGINEER
DATE

STATE OF MAINE
CHRISTOPHER W. KNIGHT
2257
PROFESSIONAL LAND SURVEYOR

TOWN WAY
BACK ROAD
ALFRED YORK COUNTY
FEDERAL AID PROJECT NO. BR-1667(700)X

FEBRUARY 2010 | RIGHT-OF-WAY MAP | D.O.T. FILE NO. 16-460
SCALE 1" = 25' | SHEET 1 OF 1

SHEET NUMBER
19
OF 19

Filename: ...\00\ROW\MSTA\019_RWPLAN1.dgn Division: BRIDGE Username: michelle.boone Date:4/27/2010