STATE OF MAINE
DEPARTMENT OF TRANSPORTATION

PROJECT, PARTRIGE BROOK - RLM 252.29

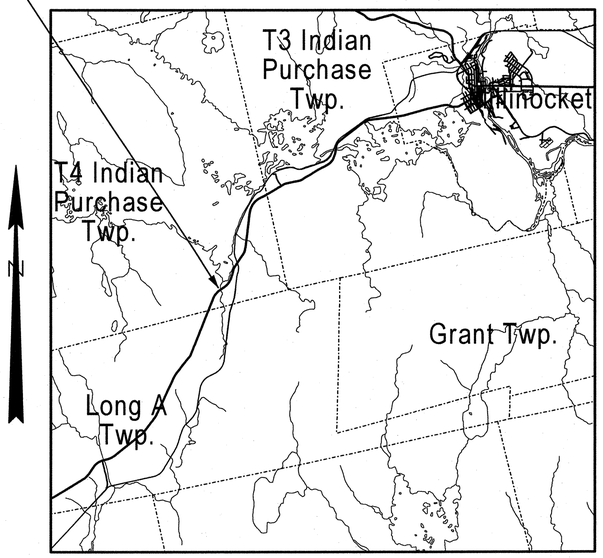

LOCATION MAP

2 0 2 4
Scale in Miles

T4 INDIAN PURCHASE

PENOBSCOT

ROUTE 11

015647.00

PROJECT LENGTH : 0.085 mi.

HIGHWAY REHABILITATION

INDEX OF SHEETS

Title Sheet....1
Typical Sections....2
Estimated Quantities and Construction Notes....3
Pipe Details....4
General Plan....5
Cross Sections....6-8
Right of Way Map....9

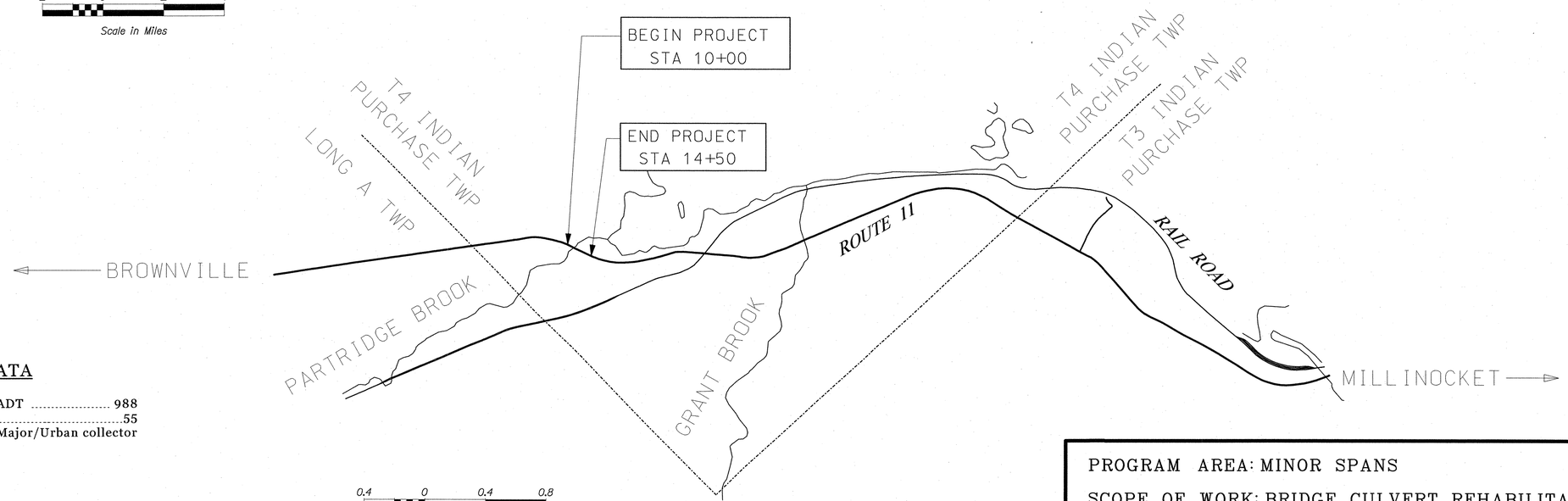

0.4 0 0.4 0.8
Scale in Miles

TRAFFIC DATA

Current (2008) AADT 988
Design speed.....55
Functional class Major/Urban collector

PROGRAM AREA: MINOR SPANS

SCOPE OF WORK: BRIDGE CULVERT REHABILITATION

PIN 015647.00

STATE OF MAINE
DEPARTMENT OF TRANSPORTATION

APPROVED	DATE
COMMISSIONER:	7/7/10
CHIEF ENGINEER:	7/7/10

STATE OF MAINE Ray E. Demerchant, Jr. 10555 LICENSED PROFESSIONAL ENGINEER

SIGNATURE		
P.E. NUMBER	10555	
DATE	6/17/10	

PROJECT INFORMATION

PROGRAM	HIGHWAY	
PROJECT MANAGER	JON BITHER	
DESIGNER	MARTINE BURNHAM	
CONSULTANT		
PROJECT RESIDENT		
CONTRACTOR		
PROJECT COMPLETION DATE		

T4 INDIAN PURCHASE
ROUTE 11

TITLE SHEET

SHEET NUMBER
1
OF 9

Filename: ...\00\HIGHWAY\MSTA\001_Title.dgn Division: HIGHWAY Username: raymond.demerchant Date:6/17/2010

INVERT REHABILITATION WITH FISH WEIRS AND SAFETY IMPROVEMENTS

STATION 10+00 to 14+50 RIGHT AND LEFT

INVERT REHABILITATION
10+00 TO 14+50 RT AND LT.

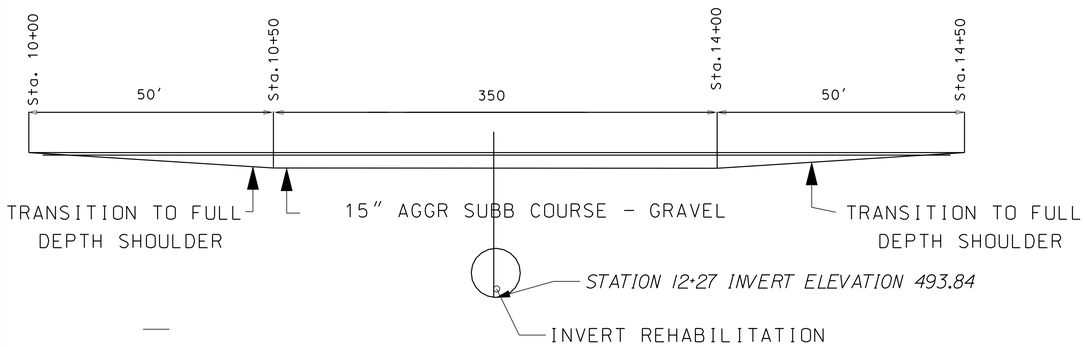

ITEM #304.10 AGGR SUBB COURSE GRAVEL

SEE TYPICAL SHOULDER RECONSTRUCT DETAIL
FOR SHOULDER PAVEMENT STRUCTURE

NOTE: REFER TO X-SECTIONS FOR STATIONING AND ELEVATIONS OF EXCAVATION

GUARDRAIL SECTION STATION 11+30.9 TO 13+18.4 LT AND 11+43.6 TO 12+93.6 RT.

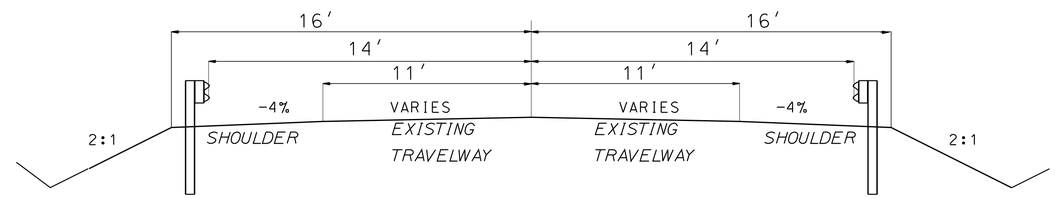

NORMAL SECTIONS

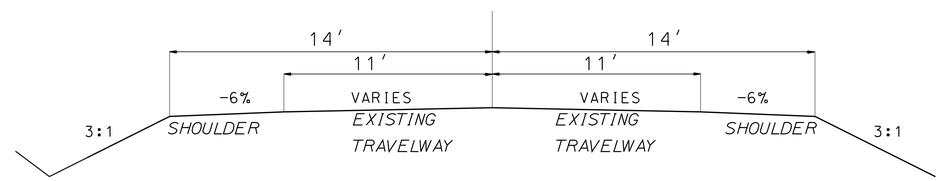

RECONSTRUCTION OF EXISTING SHOULDER
STA. 10+00 TO 14+50 RT AND LT.

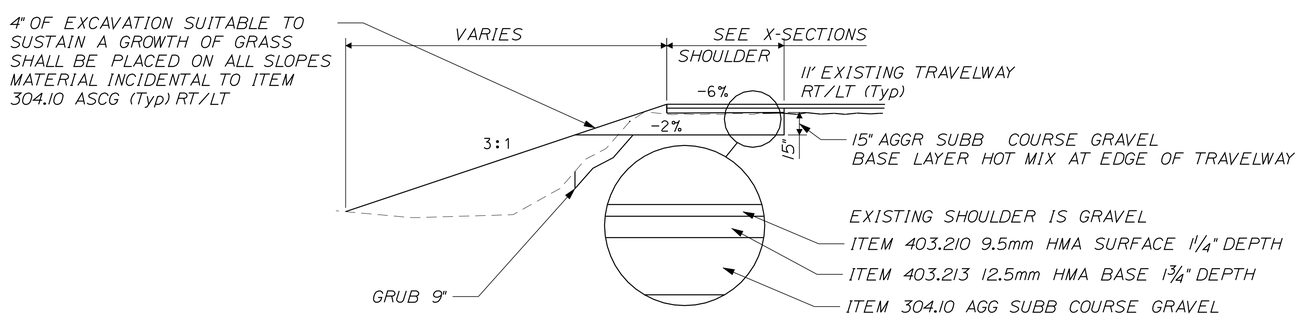

EXISTING GRADE IN A FILL SECTION BEYOND SUBGRADE SIDE SLOPE INTERCEPT, REQUIRES NO GRUBBING
THE EDGE OF THE EXISTING TRAVEL LANE PAVEMENT SHALL BE CUT TO PROVIDE A UNIFORM EDGE. CUTTING PAVEMENT WILL BE INCIDENTAL TO THE CONTRACT AND NO SEPARATE PAYMENT WILL BE MADE.

NOTES:

1. THE PAVEMENT. DEPTHS AS SHOWN ON THE PLANS ARE INTENDED TO BE NOMINAL.
2. WHEN SUPERELEVATION EXCEEDS THE SLOPE OF THE LOW SIDE SHOULDER. THE LOW SIDE SHOULDER SHALL HAVE THE SAME SLOPE AS THE TRAVELWAY.
3. CROWNS FOR BOTH NORMAL AND SUPERELEVATION SECTIONS FOR ALL COURSES OF SUBBASE AND PAVEMENT SHALL BE STRAIGHT.
4. STATIONS SHOWN UNDER TYPICALS ARE APPROXIMATE.

STATE OF MAINE
DEPARTMENT OF TRANSPORTATION

15647.00

PIN 15647.00

HIGHWAY PLANS

PROJ. MANAGER	JON BITHER	BY	DATE
DESIGN-DETAILED	M. BURNHAM	M. BURNHAM	2/19/2010
CHECKED-REVIEWED			
DESIGN2-DETAILED2			
DESIGN3-DETAILED3			
REVISIONS 1			
REVISIONS 2			
REVISIONS 3			
REVISIONS 4			
FIELD CHANGES			

SIGNATURE

P.E. NUMBER

DATE

PARTRIDGE BROOK
ROUTE 11

TYPICAL SECTIONS

SHEET NUMBER

2

OF 9

Filename: ...\highway\msta\002_Typical.dgn Division: HIGHWAY Username: Jon.Bither Date:7/12/2010

ESTIMATED QUANTITIES			
201.11	CLEARING	0.05	AC
203.20	COMMON EXCAVATION	610	CY
203.25	GRANULAR BORROW	100	CY
304.10	AGGR SUBB COURSE - GRAVEL	320	CY
403.21	HOT MIX ASPHALT 9.5 MM	55	T
403.213	HOT MIX ASPHALT 12.5 MM - BASE	80	T
409.15	BITUMINOUS TACK COAT APPLIED	30	G
509.73	COMPOSITE INVERT LINING (INCLUDES FISH WEIRS)	1	LS
511.07	COFFERDAM UPSTREAM	1	LS
511.07	COFFERDAM DOWNSTREAM	1	LS
606.23	GR TY 3C - SINGLE RAIL	337.5	LF
606.353	REFLECTORIZED FLEXIBLE GUARDRAIL MARKER	8	EA
606.79	GUARDRAIL 350 FLARE TERMINAL	4	EA
610.08	PLAIN RIPRAP	50	CY
613.319	EROSION CONTROL BLANKET	50	SY
618.1401	SEEDING METHOD NUMBER 2 - PLAN QUANTITY	4	UN
619.1201	MULCH - PLAN QUANTITY	4	UN
620.58	EROSION CONTROL GEOTEXTILE	120	SY
629.05	HAND LABOR, STRAIGHT TIME	10	HR
631.10	AIR COMPRESSOR (INC OPERATOR)	10	HR
631.11	AIR TOOL (INCLUDING OPERATOR)	10	HR
631.12	ALL-PURPOSE EXC (INC OPERATOR)	10	HR
631.132	SMALL BULLDOZER (INC OPERATOR)	10	HR
631.172	TRUCK - LARGE (INC OPERATOR)	10	HR
631.18	CHAIN SAW RENTAL (INC OPERATOR)	10	HR
652.33	DRUM	20	EA
652.34	CONE	20	EA
652.35	CONSTRUCTION SIGNS	230	SF
652.36	MAINT OF TRAFFIC CONTR DEVICES	30	CD
652.38	FLAGGER	400	MH
656.75	TEMP.SOIL EROSION AND WATER POLLUTION CONTROL PLAN	1	LS
659.10	MOBILIZATION	1	LS

EARTH SUMMARY

COMMON EXCAVATION FOR ESTIMATE

COMMON EXCAVATION (FROM CROSS SECTIONS) 574 CY
GRUBBING IN FILL AND CUT 36 CY

TOTAL COMMON EXCAVATION 610 CY

FILL FOR BORROW CALCULATIONS

COMMON FILL (FROM CROSS SECTIONS) 36 CY
FILL FOR DRIVES 0.0 CY
GRUBBING IN FILL & CUT 36 CY

TOTAL FILL 36 CY

COMPUTATION FOR COMMON BORROW FOR ESTIMATE

TOTAL FILL 36 CY

TOTAL AVAIL. COMMON EXCAVATION 610 CY
BORROW NEEDED = TOTAL FILL MINUS TOTAL AVAILABLE EXCAVATION -574 CY

IF NO BORROW IS NEEDED, SURPLUS MATERIAL = AVAILABLE EXCAVATION MINUS TOTAL FILL, PLUS TOTAL WASTE MATERIAL TO BE WASTED***

COMMON BORROW = 0.0 X 1.15 = 0 CY

TOTAL SURPLUS MATERIAL = 424 CY

CONSTRUCTION NOTES

201.11 CLEARING
AREAS AND STATIONS AS DIRECTED ON PLANS

203.20 COMMON EXCAVATION
AREAS AND STATIONS AS DIRECTED ON THE PLANS

203.25 GRANULAR BORROW
USED TO CONSTRUCT TEMPORARY ROAD TO THE PIPE IF NEEDED.

304.10 AGGR SUBB COURSE - GRAVEL
AREAS AND STATIONS AS DIRECTED ON THE PLANS

403.21 HOT MIX ASPHALT 9.5 MM
TO BE USED AS SURFACE AT A DEPTH OF 1-1/4" AS DIRECTED BY THE RESIDENT AND AS SHOWN ON PLANS

403.213 HOT MIX ASPHALT 12.5 MM - BASE
TO BE USED AS BASE AT A DEPTH OF 1-3/4" AS DIRECTED BY THE RESIDENT AND AS SHOWN ON PLANS

409.15 BITUMINOUS TACK COAT APPLIED
TO BE APPLIED BEFORE EACH LIFT OF HMA

509.73 COMPOSITE INVERT LINING
AREAS AND STATIONS AS DIRECTED ON THE PLAN. FISH WEIRS ARE INCIDENTAL TO THIS ITEM.

511.07 COFFERDAM
COFFERDAM UPSTREAM 1 LS
COFFERDAM DOWNSTREAM 1 LS
LOCATIONS DETERMIND IN THE FIELD

606.23 GR TY 3C - SINGLE RAIL

Side	Start Station	End Station	Length
LT	11+30.9	13+18.4	187.5'
RT	11+43.6	12+93.6	150.0'

ALL POSTS TO BE 7' LONG.

606.353 REFLECTORIZED FLEXIBLE GUARDRAIL MARKER
TO BE PLACED AT THE BEGINNING AND TRAILING END OF EACH GR END TREATMENT

606.79 GUARDRAIL 350 FLARED TERMINAL

Side	Start Station		End Station	Quantity
LT	10+93.4	TO	11+30.9	1
LT	13+18.4	TO	13+55.9	1
RT	11+06.1	TO	11+43.6	1
RT	12+93.6	TO	13+31.1	1

610.08 PLAIN RIPRAP
TO BE PLACED AS DIRECTED BY THE RESIDENT

613.319 EROSION CONTROL BLANKET
TO BE PLACED IN DITCHES AS DIRECTED BYTHE RESIDENT

618.1401 SEEDING METHOD NUMBER 2 - PLAN QUANTITY
SEEDING MAY BE DONE BY HAND.

620.58 EROSION CONTROL GEOTEXTILE
TO BE PLACED BENEATH ALL RIPRAP

PIPE NOTES

The existing structural plate pipe may have a slight deformation requiring contractor to verify the widths of the fiberglass panels extending at the bottom of the pipe. It is the contractors responsibility to verify the plan and no additional payment will be made for any extra material or work done due to lack of information.

STATE OF MAINE
DEPARTMENT OF TRANSPORTATION

15647.00

PIN 15647.00

PROJ. MANAGER	D. SPONBERG	BY	DATE
DESIGN-DETAILED	M. Burnham	M. Burnham	2/19/2010
CHECKED-REVIEWED			
DESIGN2-DETAILED2			
DESIGN3-DETAILED3			
REVISIONS 1			
REVISIONS 2			
REVISIONS 3			
REVISIONS 4			
FIELD CHANGES			

SIGNATURE
P.E. NUMBER
DATE

PARTRIDGE BROOK
ROUTE 11

ESTIMATED QUANTITIES
CONSTRUCTION NOTES

SHEET NUMBER
3
OF 9

Filename: ...\003_Estimate_quantities.dgn Division: HIGHWAY Username: Jon.Bither Date:7/12/2010

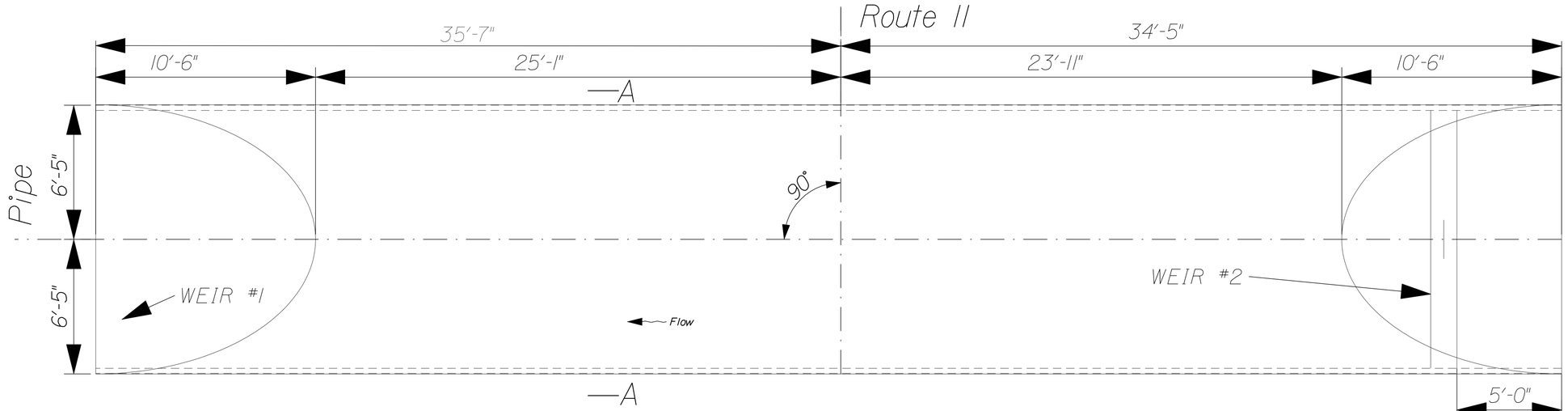

PIPE PLAN

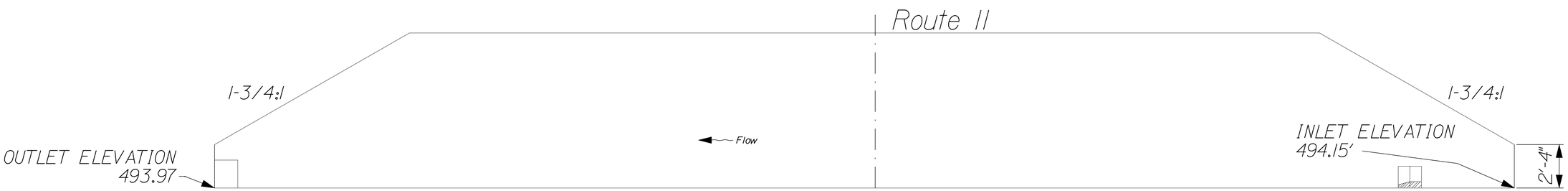

PIPE ELEVATION

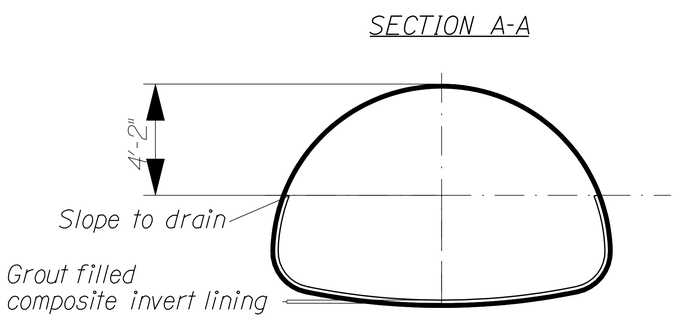

SECTION A-A

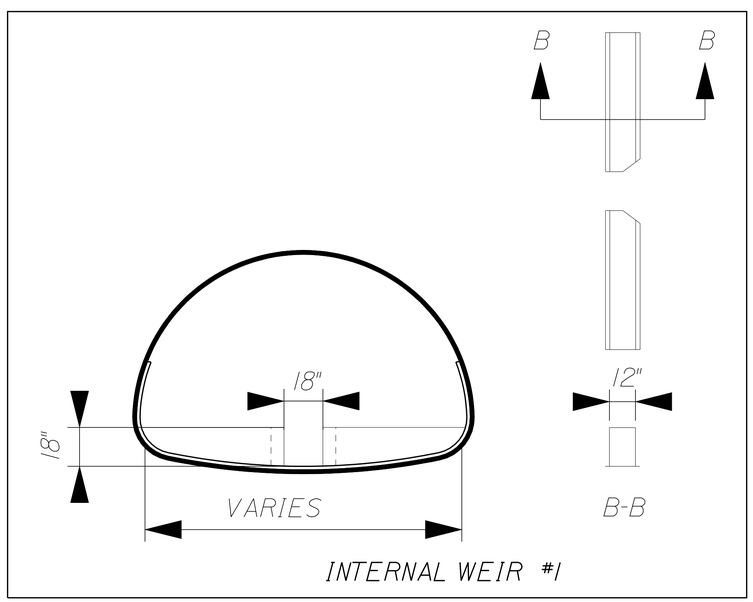

INTERNAL WEIR #1

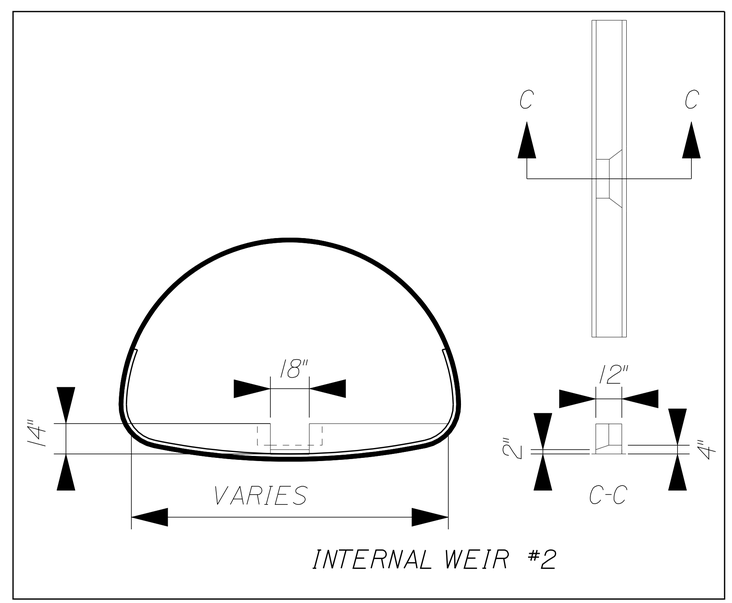

INTERNAL WEIR #2

STATE OF MAINE
DEPARTMENT OF TRANSPORTATION

15647.00

PIN
15647.00

HIGHWAY PLANS

PROJ. MANAGER	$PROJMANAGER$	BY	DATE
DESIGN-DETAILED	M. BURNHAM	M. BURNHAM	2/19/2010
CHECKED-REVIEWED			
DESIGN2-DETAILED2			
DESIGN3-DETAILED3			
REVISIONS 1			
REVISIONS 2			
REVISIONS 3			
REVISIONS 4			
FIELD CHANGES			

SIGNATURE

P.E. NUMBER

DATE

PARTRIDGE BROOK
ROUTE 11

PIPE DETAILS

SHEET NUMBER

4

OF 9

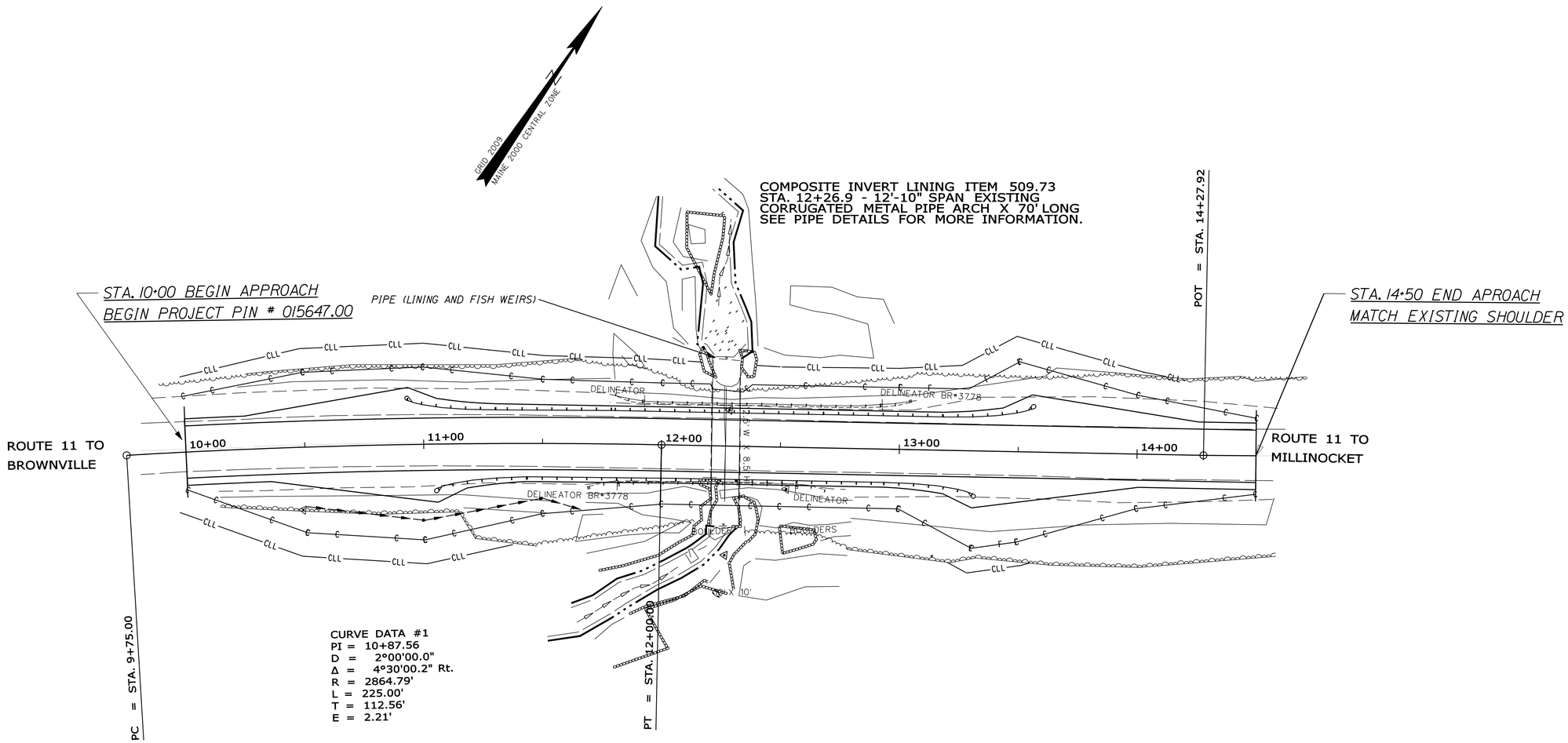

CURVE DATA #1
PI = 10+87.56
D = 2°00'00.0"
Δ = 4°30'00.2" Rt.
R = 2864.79'
L = 225.00'
T = 112.56'
E = 2.21'

GUARDRAIL TYPE 3c SINGLE RAIL - 606.23
STA. 11+30.9 TO STA. 13+18.4 LT
STA. 11+43.6 TO STA. 12+93.6 RT

GUARDRAIL 350 FLARED TERMINAL - 606.79
STA. 10+93.4 TO 11+30.9 LT
STA. 13+18.4 TO 13+55.9 LT
STA. 11+06.1 TO 11+43.6 RT
STA. 12+93.6 TO 13+31.1 RT

STATE OF MAINE
DEPARTMENT OF TRANSPORTATION

15647.00

PIN
15647.00

HIGHWAY PLANS

PROJ. MANAGER	Jon Bither	BY	DATE
DESIGN-DETAILED	M. Burnham	M. Burnham	2/19/2010
CHECKED-REVIEWED			
DESIGN2-DETAILED2			
DESIGN3-DETAILED3			
REVISIONS 1			
REVISIONS 2			
REVISIONS 3			
REVISIONS 4			
FIELD CHANGES			

SIGNATURE

P.E. NUMBER

DATE

PARTRIDGE BROOK
ROUTE 11

GENERAL PLAN

SHEET NUMBER

5

OF 9

Filename: ...\highway\rnsta\005_HDPlan1.dgn Division: HIGHWAY Username: Jon.Bither Date:7/12/2010

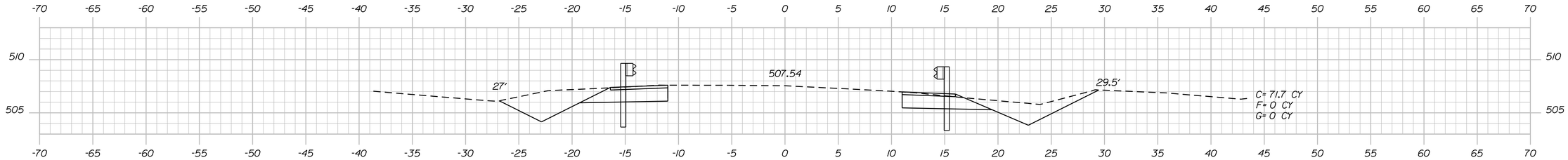

11+50.00

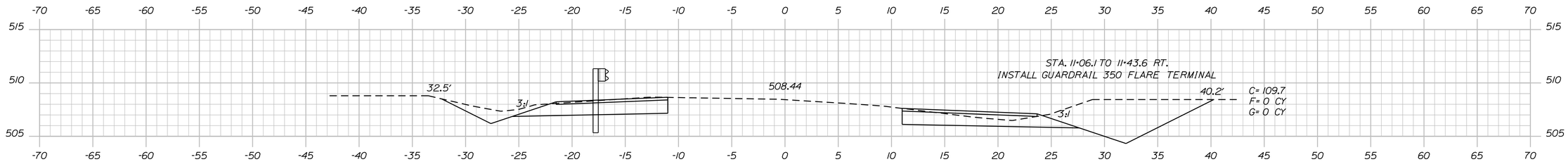

11+00.00

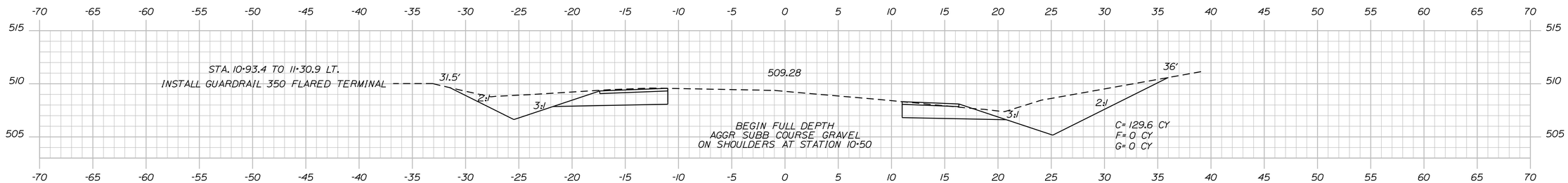

10+50.00

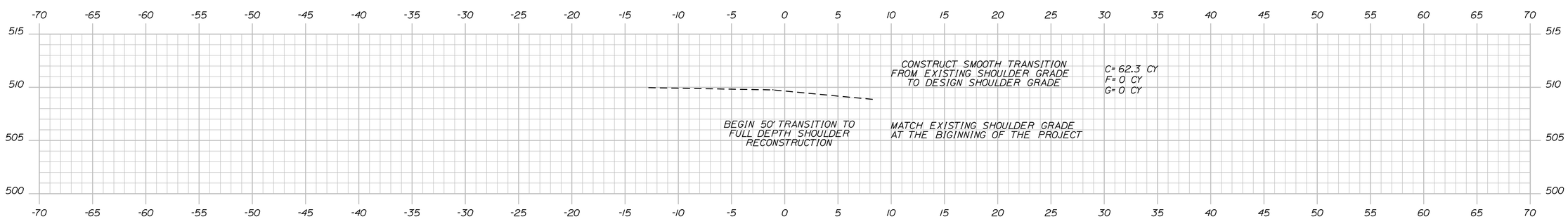

10+00.00
BEGIN PROJECT

STATE OF MAINE
DEPARTMENT OF TRANSPORTATION

15647.00

PIN 15647.00
BRIDGE NUMBER 3778

HIGHWAY PLANS

PROJ. MANAGER	JON BITHER	BY	DATE
DESIGN-DETAILED	M. BURNHAM	M. BURNHAM	12/18/2010
CHECKED-REVIEWED	-----	-----	-----
DESIGN2-DETAILED2	$designer2$	$detailer2$	$project2$
DESIGN3-DETAILED3	$designer3$	$detailer3$	$project3$
REVISIONS 1	-----	-----	$revdate1$
REVISIONS 2	-----	-----	$revdate2$
REVISIONS 3	$revision3$		$revdate3$
REVISIONS 4	$revision4$		$revdate4$
FIELD CHANGES	$fieldchange$		$fielddate$

SIGNATURE

P.E. NUMBER

DATE

PARTRIDGE BROOK
ROUTE 11

CROSS SECTIONS

SHEET NUMBER

6

OF 9

Sta. 10+00.00 to Sta. 11+50.00

Filename: ...\00\highway\msta\006_Xsect1.dgn Division: HIGHWAY Username: Jon.Bither Date:7/12/2010

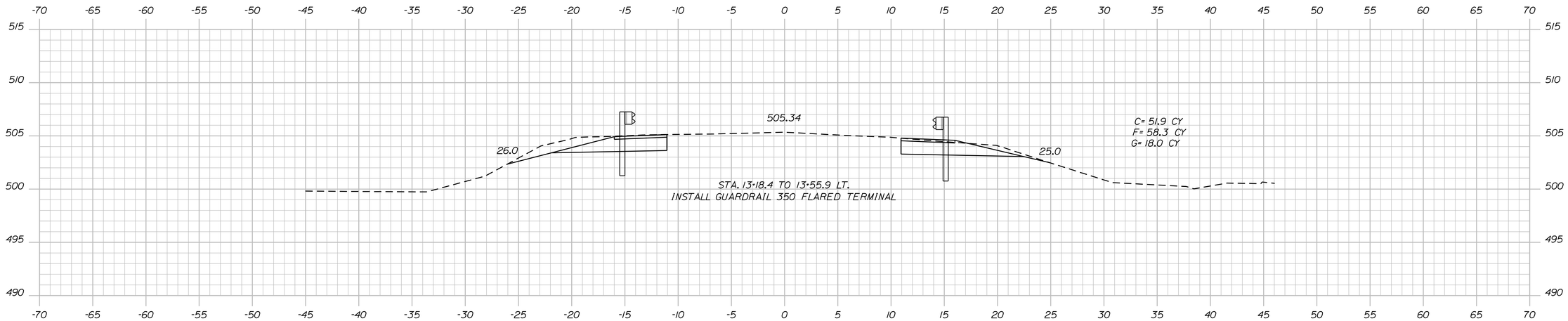

13+00.00

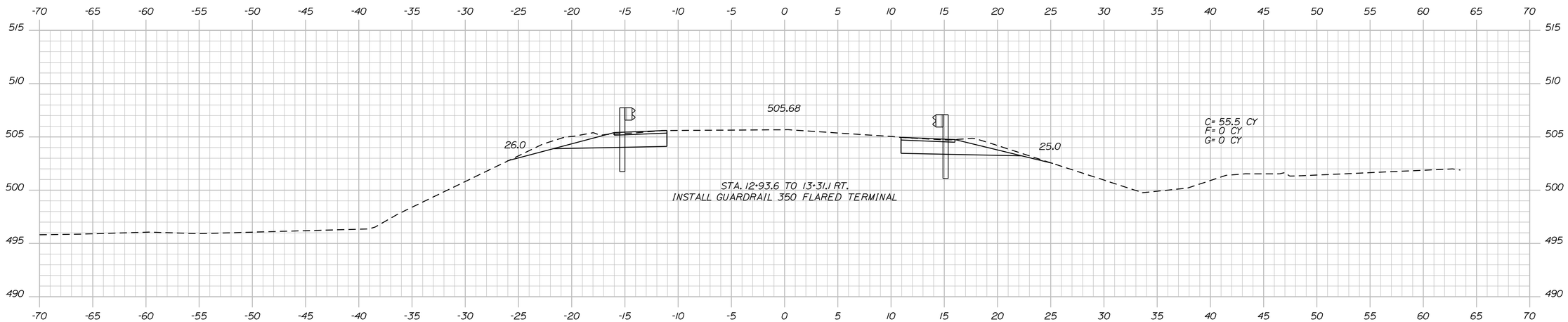

12+50.00

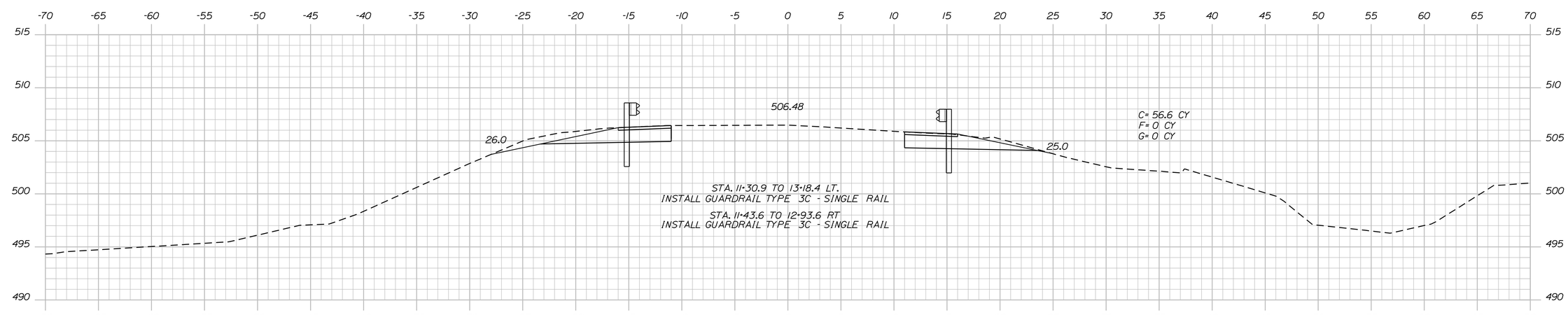

12+00.00

STATE OF MAINE
DEPARTMENT OF TRANSPORTATION

15647.00

PIN 15647.00

BRIDGE NUMBER 3778

HIGHWAY PLANS

PROJ. MANAGER	JON BITHER			
DESIGN-DETAILED	M. BURNHAM	----	2/18/2010	SIGNATURE
CHECKED-REVIEWED	----	----	----	
DESIGN2-DETAILED2	$designer2$	$detailer2$	$proj date2$	
DESIGN3-DETAILED3	$designer3$	$detailer3$	$proj date3$	P.E. NUMBER
REVISIONS 1	----	----	$revdate1$	
REVISIONS 2	----	----	$revdate2$	
REVISIONS 3	$revision3$		$revdate3$	DATE
REVISIONS 4	$revision4$		$revdate4$	
FIELD CHANGES	$fieldchanges$		$fielddate$	

PARTRIDGE BROOK
ROUTE 11

CROSS SECTIONS

SHEET NUMBER

7

OF 9

Sta. 12+00.00 to Sta. 13+00.00

Filename: ...\00\highway\msta\007_Xsect2.dgn Division: HIGHWAY Username: Jon.Bither Date:7/12/2010

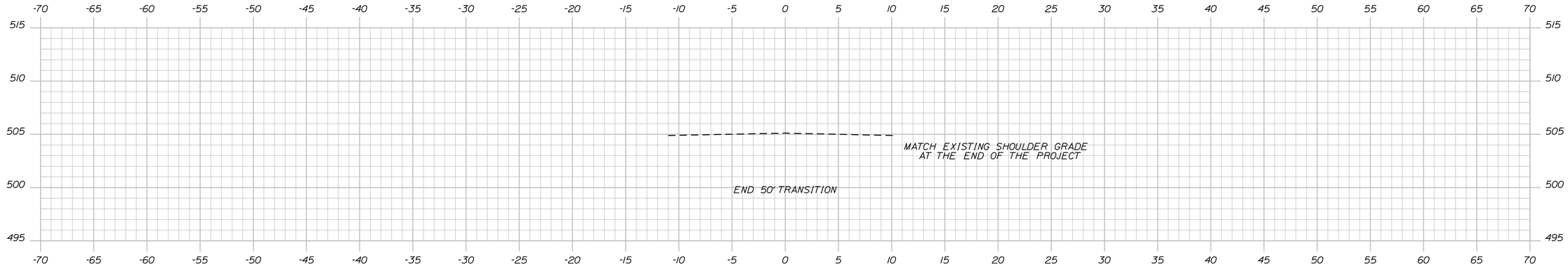

14+50
END PROJECT

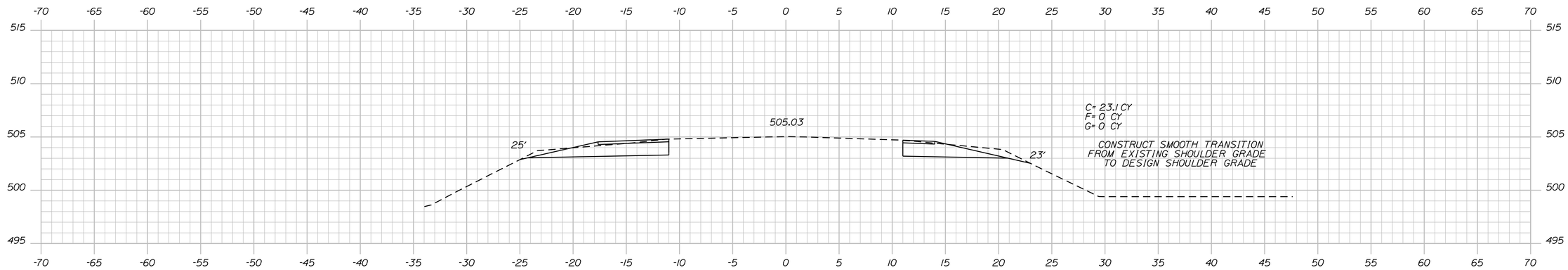

14+00.00

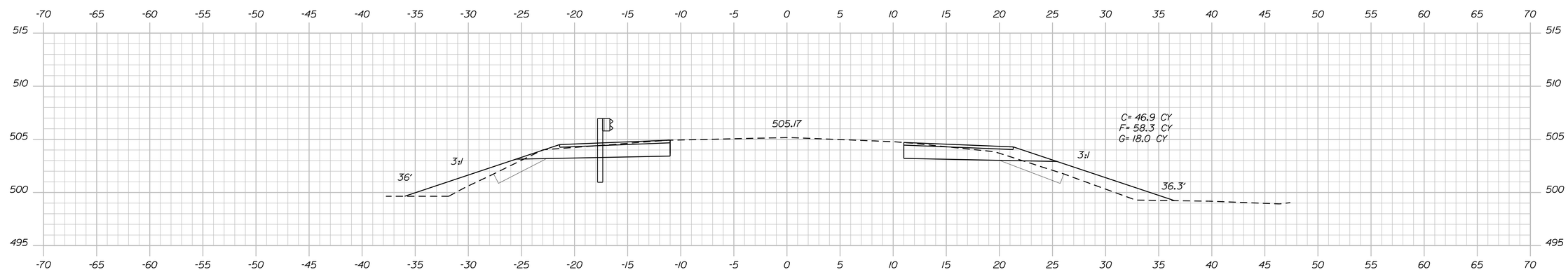

13+50.00

Filename: ...\00\highway\msta\008_Xsect3.dgn Division: HIGHWAY Username: Jon.Bither Date:7/12/2010

STATE OF MAINE
DEPARTMENT OF TRANSPORTATION

15647.00

PIN 15647.00

BRIDGE NUMBER 3778

HIGHWAY PLANS

		BY	DATE	SIGNATURE
PROJ. MANAGER	JON BITHER			
DESIGN-DETAILED	M. BURNHAM	M. BURNHAM	2/18/2010	P.E. NUMBER
CHECKED-REVIEWED	-----	-----	-----	
DESIGN2-DETAILED2	$designer2$	$detailer2$	$proj date2$	$revdate1$
DESIGN3-DETAILED3	$designer3$	$detailer3$	$proj date3$	$revdate2$
REVISIONS 1	-----			$revdate3$
REVISIONS 2	-----			$revdate4$
REVISIONS 3	$revision3$			DATE
REVISIONS 4	$revision4$			$revdate5$
FIELD CHANGES	$fieldchange$			$fielddate$

PARTRIDGE BROOK
ROUTE 11

CROSS SECTIONS

SHEET NUMBER

8

OF 9

Sta. 13+50.00 to Sta. 14+50.00

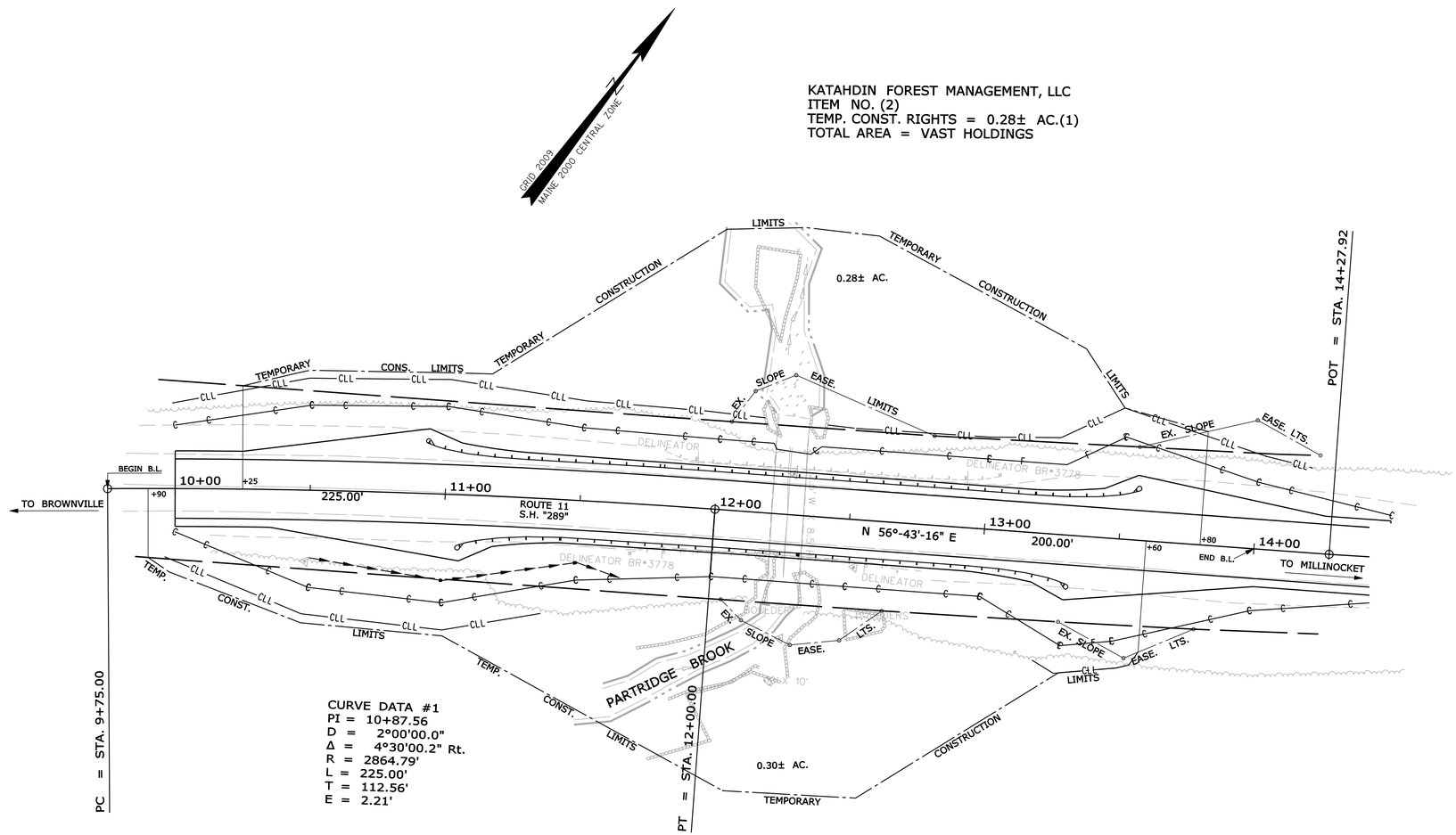

R/W REFERENCES
SHC FILE NO. 10-165
SHC FILE NO. 10-42

R/W REFERENCES
SHC FILE NO. 10-165
SHC FILE NO. 10-42

BRIDGE NO. 3780

PIN 015647.00

SYMBOLS

- IP or ● IPF (IRON PIPE or PIN FOUND)
- ☐ S.T. (SEPTIC TANK)
- ⊡ (ROW MONUMENT)
- ΔBM (TRAVERSE POINT)
- WATER LINE
- GAS LINE
- ELECTRIC LINE
- TELEPHONE LINE
- SEWER LINE
- WELL (WELL)
- GRADING LIMIT LINE
- CONSTRUCTION LIMIT LINE
- PROPERTY LINE
- LIMITS OF WROUGHT PORTION (L.O.W.P.)
- EXISTING RIGHT OF WAY
- NEW RIGHT OF WAY
- NEW ROW WITHIN EXIST. ROW
- CONTROL OF ACCESS

ITEM	TECH	CHECKED
BASE MAP		
EXIST. R/W	RJW	
PROP. LINES	RJW	
AREAS		

STATE OF MAINE
DEPARTMENT OF TRANSPORTATION
16 STATE HOUSE STATION - AUGUSTA, ME 04333-0016
T4 INDIAN PURCHASE TWP
RIGHT OF WAY MAP

REVISIONS			
NO.	DATE	DESCRIPTION	BY

PLAN FILED IN PLAN BOOK PAGE COUNTY RECORD

NO.	GRANTOR	INSTRUMENT	DATE	BOOK	PAGE

DAVID A. COLE
COMMISSIONER
KENNETH L. SWEENEY
CHIEF ENGINEER
DATE

STATE OF MAINE
PETER A. BELANGER
1341
PROFESSIONAL LAND SURVEYOR

STATE HIGHWAY "289"
ROUTE 11
T4 INDIAN PURCHASE TWP PENOBSCOT COUNTY
STATE PROJECT NO. 15647.00

APRIL 2010 | RIGHT-OF-WAY MAP | D.O.T. FILE NO. 10-462
SCALE 1" = 25' | SHEET 1 OF 1

SHEET NUMBER
9
OF 9

Filename: ...\00\ROW\MSTA\009_RWPLAN1.dgn Division: HIGHWAY Username: Jon.Bither Date:7/12/2010