Updated 10/22/09

FEDERAL PROJECT

Effective December 1, 2008
Supersedes November 4, 2008

BIDDING INSTRUCTIONS

FOR ALL PROJECTS:

1. Use pen and ink to complete all paper Bids.
2. As a minimum, the following must be received prior to the time of Bid opening:

For a Paper Bid:

a) a copy of the Notice to Contractors, b) the completed Acknowledgement of Bid Amendments form, c) the completed Schedule of Items, d) two copies of the completed and signed Contract Offer, Agreement & Award form, e) a Bid Guaranty, and f) any other certifications or Bid requirements listed in the Bid Documents as due by Bid opening.

For an Electronic Bid:

a) a completed Bid using Expedite® software and submitted via the Bid Express™ webbased service, b) a Bid Guaranty (as described below) or a faxed copy of a Bid Bond (with original to be delivered within 72 hours), and c) any other certifications or Bid requirements listed in the Bid Documents as due by Bid opening.

3. Include prices for all required items in the Schedule of Items. ("Zero is not considered a Bid price.")
4. Include a Bid Guaranty. Acceptable forms are:
   a) a properly completed and signed Bid Bond on the Department's prescribed form (or on a form that does not contain any significant variations from the Department's form as determined by the Department) for 5% of the Bid Amount or
   b) an Official Bank Check, Cashier's Check, Certified Check, U.S. Postal Money Order or Negotiable Certificate of Deposit in the amount stated in the Notice to Contractors.
5. If a paper Bid is to be sent, Federal Express overnight delivery is suggested as the package is delivered directly to the DOT Headquarters Building located at 16 Child Street in Augusta.
6. Other means, such as U.S. Postal Service's Express Mail has proven not to be reliable.

IN ADDITION, FOR FEDERAL AID PROJECTS:

7. Complete the DBE Proposed Utilization form in the proper amounts, and submit with your bid on bid opening day. If you are submitting your bid electronically, you must FAX your DBE Utilization Form to (207) 624-3431.

If you need further information regarding Bid preparation, call the DOT Contracts Section at (207) 624-3410.

For complete bidding requirements, refer to Section 102 of the Maine Department of Transportation, Standard Specifications, Revision of December 2002.

January 30, 2004
Supercedes February 11, 2003

NOTICE

The Maine Department of Transportation is attempting to improve the way Bid Amendments/Addendums are handled, and allow for an electronic downloading of bid packages from our website, while continuing to maintain a planholders list.

Prospective bidders, subcontractors or suppliers who wish to download a copy of the bid package and receive a courtesy notification of project specific bid amendments, must provide an email address to Diane Barnes or Mike Babb at the MDOT Contracts mailbox at: MDOT.contracts@maine.gov. Each bid package will require a separate request.

Additionally, interested parties will be responsible for reviewing and retrieving the Bid Amendments from our web site, and acknowledging receipt and incorporating those Bid Amendments in their bids using the Acknowledgement of Bid Amendment Form.

The downloading of bid packages from the MDOT website is not the same as providing an electronic bid to the Department. Electronic bids must be submitted via http://www.BIDX.com. For information on electronic bidding contact Larry Childs at Larry.Childs@maine.gov.

NOTICE

For security and other reasons, all Bid Packages which are mailed, shall be provided in double (one envelope inside the other) envelopes. The *Inner Envelope* shall have the following information provided on it:

Bid Enclosed - Do Not Open
PIN:
Town:
Date of Bid Opening:
Name of Contractor with mailing address and telephone number:

In Addition to the usual address information, the *Outer Envelope* should have written or typed on it:

Double Envelope: Bid Enclosed
PIN:
Town:
Date of Bid Opening:
Name of Contractor:
This should not be much of a change for those of you who use Federal Express or similar services.

Hand-carried Bids may be in one envelope as before, and should be marked with the following infrormation:

Bid Enclosed: Do Not Open
PIN:
Town:
Name of Contractor:

STATE OF MAINE DEPARTMENT OF TRANSPORTATION

Bid Guaranty-Bid Bond Form

KNOW ALL MEN BY THESE PRESENTS THAT_____

_____, of the City/Town of _____and State of_____

as Principal, and _____as Surety, a

Corporation duly organized under the laws of the State of_____and having a usual place of

Business in _____and hereby held and firmly bound unto the Treasurer of

the State of Maine in the sum of_____,for payment which Principal and Surety bind

themselves, their heirs, executers, administrators, successors and assigns, jointly and severally.

The condition of this obligation is that the Principal has submitted to the Maine Department of Transportation, hereafter Department, a certain bid, attached hereto and incorporated as a part herein, to enter into a written contract for the construction of _____

_____

_____and if the Department shall accept said bid and the Principal shall execute and deliver a contract in the form attached hereto (properly completed in accordance with said bid) and shall furnish bonds for this faithful performance of said contract, and for the payment of all persons performing labor or furnishing material in connection therewith, and shall in all other respects perform the agreement created by the acceptance of said bid, then this obligation shall be null and void; otherwise it shall remain in full force, and effect.

Signed and sealed this_____day of _____20_____

WITNESS:

_____

_____

_____

WITNESS

_____

_____

_____

PRINCIPAL:

By_____

By:_____

By:_____

SURETY:

By_____

By:_____

Name of Local Agency: _____

SAMPLE

NOTICE

Bidders:

Please use the attached "Request for Information" form when faxing questions and comments concerning specific Contracts that have been Advertised for Bid. Include additional numbered pages as required. Questions are to be faxed to the number listed in the Notice to Contractors. This is the only allowable mechanism for answering Project specific questions. Maine DOT will not be bound to any answers to Project specific questions received during the Bidding phase through other processes.

State of Maine
Department of Transportation

REQUEST FOR INFORMATION

Date _____ Time _____

Information Requested: **PIN:** _____ **Town(s):** _____

_____

_____

_____

_____

_____

_____

_____

_____

_____

_____

_____

_____

Request by: _____ **Phone: (_____)**_____
Bid Date: _____ **Fax: (_____)**_____

Complete top portion of form and transmit to the number listed in the Notice to Contractors

RFI No: _____ **RFI received:** _____

Response:_____

_____

_____

_____

_____

_____

_____

_____

_____

_____

_____

Response By:_____ Date: _____

NOTICE

Disadvantaged Business Enterprise Proposed Utilization

The Apparent Low Bidder must submit the Disadvantaged Business Enterprise Proposed Utilization form with their bid.

The Contractor's Disadvantaged Business Enterprise Proposed Utilization Plan form contains additional information that is required by USDOT.

The Contractor's Disadvantaged Business Enterprise Proposed Utilization Plan form must be used.

A copy of the new Contractor's Disadvantaged Business Enterprise Proposed Utilization Plan and instructions for completing it are attached.

Note: Questions about DBE firms, or to obtain a printed copy of the DBE Directory, contact The Office of Civil Rights at (207) 624-3066.

MDOTs DBE Directory of Certified firms can also be obtained at www.maine.gov/mdot/disadvantaged-business-enterprises/dbe-home.php

INSTRUCTIONS FOR PREPARING THE CONTRACTOR'S DISADVANTAGED BUSINESS ENTERPRISE UTILIZATION PLAN

The Contractor Shall:

1. Submit a completed Contractor's Disadvantaged Business Enterprise Utilization Plan with your bid on the Bid day.

2. Extend equal opportunity to MDOT certified DBE firms (as listed in MDOT's DBE Directory of Certified Businesses) in the selection and utilization of Subcontractors and Suppliers.

SPECIFIC INSTRUCTIONS FOR COMPLETING THE FORM:

Insert Contractor name, the name of the person(s) preparing the form, and that person(s) telephone and fax number.

Provide total Bid price, Federal Project Identification Number, and location of the Project work.

In the columns, name each DBE firm to be used, provide the Unit or Item cost of the Work/Product to be provided by the DBE firm, give a brief description of the Work, and the dollar value of the Work.

If no DBE firm is to be utilized, the Contractor must document the reason(s) why no DBE firms are being used. Specific supporting evidence of good faith efforts taken by Contractors to solicit DBE Bidders must be attached. This evidence, as a minimum, includes phone logs, e-mail and/or mail DBE solicitation records, and the documented results of these solicitations.

NOTICE

Maine Department of Transportation
Disadvantaged Business Enterprise Program

Notice is hereby given that in accordance with US DOT regulation 49 CFR Part 26, the Maine Department of Transportation has established a DBE Program for disadvantaged business participation in the federal-aid construction program; MaineDOT contracts covered by the program include consulting, construction, supplies, manufacturing, and service contracts.

For FFY 2010 (October 1, 2009 through September 30, 2010), MaineDOT has established a DBE participation goal of 5.8% to be achieved through race/gender neutral means.

Interested parties may view MaineDOT's DBE goal setting methodology for the next 45 days during normal business hours (8-4, M-F) at the Maine Department of Transportation, Civil Rights Office, 16 State House Station, Augusta ME 04333-0016. Appointments may be scheduled by telephone at (207) 624-3066. The goal setting methodology is also available for viewing on the MaineDOT website: http://www.maine.gov/mdot/disadvantaged-business-enterprises/dbe-home.php.

Public comment will be accepted for 45 days following the last date of publication. The public comment period will be complete on September 16th, 2009. The goal will be submitted for approval to the FHWA on August 1st, 2009. Updated goal will be submitted to FHWA, if necessary, based on public comment.

Comments on the goal will be accepted, in writing, for 45 days from the date of this notice. Written comments should be addressed to Jackie LaPerriere, Maine Department of Transportation, Civil Rights Office, 16 State House Station, Augusta, Maine 04333-0016 or by e-mail at: jackie.laperriere@maine.gov.

Several interested stakeholders will be notified directly by e-mail of the goal publication, including Maine Small Business Administration, Associated General Contractors, and ACEC, and Maine DBEs.

____ **Original Submission** **Page ___ of ___**

____ **Revision # _____**

MaineDOT CONTRACTOR'S DBE/SUBCONTRACTOR
PROPOSED UTILIZATION FORM

All Bidders must furnish this form with their bid on Bid Opening day

Contractor:_____ **Telephone:** _____ **Ext.** _____

Contact Person:_____ **Fax:** _____

E-mail: _____

BID PRICE: $_____ **BID DATE:** _____/_____/_____

FEDERAL PROJECT PIN # _____ **PROJECT LOCATION:** _____

TOTAL DBE _____ **% PARTICIPATION FOR THIS SUBMISSION**

WBE•	DBE•	Non DBE	Firm Name	Unit/Item Cost	Unit #	Description of Work & Item Number	Actual $ Value
						Total ›	

Contractors must make a good faith effort to include <u>Certified</u> DBE firms in all aspects of the project. If no DBE firms are to be part of this project, a detailed explanation is required. Attach supporting evidence to the maximum participation of DBEs on this project. This is a requirement. This evidence must include name of firm(s) contacted, date contacted, and outcome of solicitation.

Equal Opportunity Use:

Form received: ___/___/___ Verified by: _____

____ Accepted ____ Rejected _____

cc: ☐ Contracts ☐ Other _____

For a complete list of certified firms and company designation (WBE/DBE) go to http://www.maine.gov/mdot

Rev. 1/08

Maine Department of Transportation
Civil Rights Office

Directory of Certified Disadvantaged Business Enterprises

Listing can be found at:
www.maine.gov/mdot/disadvantaged-business-enterprises/dbe-home.php

For additional information and guidance contact: Civil Rights Office at (207) 624-3066

September 14, 2007

Vendor Registration

Prospective Bidders must register as a vendor with the Department of Administrative & Financial Services if the vendor is awarded a contract. Vendors will not be able to receive payment without first being registered. Vendors/Contractors will find information and register through the following link –
http://www.maine.gov/purchases/vendorinfo/vss.htm

STATE OF MAINE DEPARTMENT OF TRANSPORTATION
NOTICE TO CONTRACTORS

Sealed Bids addressed to the Maine Department of Transportation, Augusta, Maine 04333 and endorsed on the wrapper "Bids for Railroad Crossing Bridge Replacement in the town of **FALMOUTH**" will be received from contractors at the Reception Desk, Maine DOT Building, Child Street, Augusta, Maine, until 11:00 o'clock A.M. (prevailing time) on January 13, 2010 and at that time and place publicly opened and read. Bids will be accepted from all bidders. The lowest responsive bidder must have completed, or successfully complete, a bridge project prequalification, or project specific prequalification to be considered for the award of this contract. **We now accept electronic bids for those bid packages posted on the bidx.com website. Electronic bids do not have to be accompanied by paper bids. Please note: the Department will accept a facsimile of the bid bond; however, the original bid bond must then be received at the MDOT Contract Section within 72 hours of the bid opening. Until further notice, dual bids (one paper, one electronic) will be accepted, with the paper copy taking precedence.**

Description: Maine Federal Aid Project No. BR-1509(400)X, PIN 015094.00

Location: In Cumberland County, project is located over the Maine Central Railroad & Presumpscot River on route 100 & 26 approximately 0.1 mile southerly of Turnpike Ramp 10.

Scope of Work: Railroad Crossing Bridge replacement and other incidental work.

The basis of award will be Section 0001 & Section 0002

For general information regarding Bidding and Contracting procedures, contact Scott Bickford at (207)624-3410. Our webpage at http://www.maine.gov/mdot/contractor-consultant-information/contractor_cons.php contains a copy of the schedule of items, Plan Holders List, written portions of bid amendments (not drawings), and bid results. For Project-specific information fax all questions to **Project Manager Nate Benoit** at (207)624-3431. Questions received after 12:00 noon of Monday prior to bid date will not be answered. Bidders shall not contact any other Departmental staff for clarification of Contract provisions, and the Department will not be responsible for any interpretations so obtained. Hearing impaired persons may call the Telecommunication Device for the Deaf at 888-516-9364.

Plans, specifications and bid forms may be seen at the Maine DOT Building in Augusta, Maine and at the Department of Transportation's Regional Office in Scarborough. They may be purchased from the Department between the hours of 8:00 a.m. to 4:30 p.m. by cash, credit card (Visa/Mastercard) or check payable to Treasurer, State of Maine sent to Maine Department of Transportation, Attn.: Mailroom, 16 State House Station, Augusta, Maine 04333-0016. They also may be purchased by telephone at (207) 624-3536 between the hours of 8:00 a.m. to 4:30 p.m. Full size plans $143.00 ($151.00 by mail). Half size plans $71.50($75.50 by mail), Bid Book $10 ($13 by mail), Single Sheets $2, payment in advance, all non-refundable.

Each Bid must be made upon blank forms provided by the Department and must be accompanied by a bid bond at 5% of the bid amount or an official bank check, cashier's check, certified check, certificate of deposit, or United States postal money order in the amount of $350,000.00 payable to Treasurer, State of Maine as a Bid guarantee. A Contract Performance Surety Bond and a Contract Payment Surety Bond, each in the amount of 100 percent of the Contract price, will be required of the successful Bidder.

This Contract is subject to all applicable Federal Laws. This contract is subject to compliance with the Disadvantaged Business Enterprise program requirements as set forth by the Maine Department of Transportation.

All work shall be governed by "State of Maine, Department of Transportation, Standard Specifications, Revision of December 2002", price $10 [$13 by mail], and Standard Details, Revision of December 2002, price $20 [$25 by mail]. Standard Detail updates can be found at http://www.maine.gov/mdot/contractor-consultant-information/contractor_cons.php

The right is hereby reserved to the MDOT to reject any or all bids.

Augusta, Maine
December 9, 2009

STATE OF MAINE
Kenneth
L.
Sweeney
4028
LICENSED
PROFESSIONAL ENGINEER

Kenneth L. Sweeney

KENNETH L. SWEENEY P.E.
ACTING CHIEF ENGINEER

NOTICE

All bids for Federal Projects opened after December 1, 2008 **MUST** be accompanied by the DBE Proposed Utilization form. If you are submitting an electronic bid, the DBE Utilization Form may be faxed to 207-624-3431.

SPECIAL PROVISION 102.7.3
ACKNOWLEDGMENT OF BID AMENDMENTS

With this form, the Bidder acknowledges its responsibility to check for all Amendments to the Bid Package. For each Project under Advertisement, Amendments are located at http://www.maine.gov/mdot/comprehensive-list-projects/project-information.php It is the responsibility of the Bidder to determine if there are Amendments to the Project, to download them, to incorporate them into their Bid Package, and to reference the Amendment number and the date on the form below. The Maine DOT will not post Bid Amendments any later than noon the day before Bid opening without individually notifying all the planholders.

Amendment Number	Date

The Contractor, for itself, its successors and assigns, hereby acknowledges that it has received all of the above referenced Amendments to the Bid Package.

CONTRACTOR

_____
Date

_____
Signature of authorized representative

_____
(Name and Title Printed)

CONTRACT ID: 015094.00 PROJECT(S): BR-1509(400)X

CONTRACTOR :_____

LINE NO	ITEM DESCRIPTION	APPROX. QUANTITY AND UNITS	UNIT PRICE DOLLARS	UNIT PRICE CTS	BID AMOUNT DOLLARS	BID AMOUNT CTS
SECTION 0001 PROJECT ITEMS						
0010	201.11 CLEARING	1.000 AC				
0020	201.23 REMOVING SINGLE TREE TOP ONLY	6.000 EA				
0030	201.24 REMOVING STUMP	3.000 EA				
0040	202.08 REMOVING BUILDING NO.: 1	LUMP	LUMP			
0050	202.15 REMOVING MANHOLE OR CATCH BASIN	5.000 EA				
0060	202.19 REMOVING EXISTING BRIDGE	LUMP	LUMP			
0070	203.20 COMMON EXCAVATION	5200.000 CY				
0080	203.25 GRANULAR BORROW	3000.000 CY				
0090	203.26 GRAVEL BORROW	185.000 CY				
0100	203.4339 GEOFOAM LIGHTWEIGHT FILL	6660.000 CY				

CONTRACT ID: 015094.00 PROJECT(S): BR-1509(400)X

CONTRACTOR :_____

LINE NO	ITEM DESCRIPTION	APPROX. QUANTITY AND UNITS	UNIT PRICE DOLLARS	UNIT PRICE CTS	BID AMOUNT DOLLARS	BID AMOUNT CTS
0110	203.4539 LEVELING SAND	1050.000 CY				
0120	206.061 STRUCTURAL EARTH EXCAVATION - DRAINAGE AND MINOR STRUCTURES, BELOW GRADE	10.000 CY				
0130	206.082 STRUCTURAL EARTH EXCAVATION - MAJOR STRUCTURES	380.000 CY				
0140	206.10 STRUCTURAL EARTH EXCAVATION - PIERS	3850.000 CY				
0150	304.10 AGGREGATE SUBBASE COURSE - GRAVEL	5625.000 CY				
0160	403.209 HOT MIX ASPHALT 9.5 MM (SIDEWALKS, DRIVES, INCIDENTALS)	200.000 T				
0170	403.210 HOT MIX ASPHALT 9.5 MM	1400.000 T				
0180	403.213 HOT MIX ASPHALT 12.5 MM BASE	800.000 T				
0190	409.15 BITUMINOUS TACK COAT - APPLIED	196.000 G				
0200	501.231 DYNAMIC LOADING TEST	15.000 EA				
0210	501.301 STEEL SHEET PILING	LUMP	LUMP			

CONTRACT ID: 015094.00 PROJECT(S): BR-1509(400)X

CONTRACTOR :_____

LINE NO	ITEM DESCRIPTION	APPROX. QUANTITY AND UNITS	UNIT PRICE DOLLARS	UNIT PRICE CTS	BID AMOUNT DOLLARS	BID AMOUNT CTS
0220	501.46 STEEL H-BEAM PILES 73 LBS/FT, DELIVERED	15700.000 LF				
0230	501.461 STEEL H-BEAM PILES 73 LBS/FT, IN PLACE	15700.000 LF				
0240	501.90 PILE TIPS	123.000 EA				
0250	501.91 PILE SPLICES	366.000 EA				
0260	501.92 PILE DRIVING EQUIPMENT MOBILIZATION	LUMP	LUMP			
0270	502.219 STRUCTURAL CONCRETE, ABUTMENTS AND RETAINING WALLS	LUMP	LUMP			
0280	502.239 STRUCTURAL CONCRETE PIERS	LUMP	LUMP			
0290	502.24 STRUCTURAL CONCRETE PIERS (PLACED UNDER WATER)	1450.000 CY				
0300	502.26 STRUCTURAL CONCRETE ROADWAY AND SIDEWALK SLABS ON STEEL BRIDGES	LUMP	LUMP			
0310	502.31 STRUCTURAL CONCRETE APPROACH SLABS	LUMP	LUMP			
0320	502.452 STRUCTURAL CONCRETE DISTRIBUTION SLAB	LUMP	LUMP			

CONTRACT ID: 015094.00 PROJECT(S): BR-1509(400)X

CONTRACTOR :_____

LINE NO	ITEM DESCRIPTION	APPROX. QUANTITY AND UNITS	UNIT PRICE DOLLARS	UNIT PRICE CTS	BID AMOUNT DOLLARS	BID AMOUNT CTS
0330	502.48 LOW PERMEABILITY CONCRETE	210.000 CY				
0340	502.56 CONCRETE FILL	33.000 CY				
0350	502.72 FIBER REINFORCED POLYMER BRIDGE DRAIN - TYPE A	9.000 EA				
0360	503.12 REINFORCING STEEL, FABRICATED AND DELIVERED	515000.000 LB				
0370	503.13 REINFORCING STEEL, PLACING	515000.000 LB				
0380	503.14 EPOXY COATED REINFORCING STEEL, FABRICATED AND DELIVERED	30400.000 LB				
0390	503.15 EPOXY COATED REINFORCING STEEL PLACING	30400.000 LB				
0400	503.16 WELDED STEEL WIRE FABRIC, COMPLETE IN PLACE	8650.000 LB				
0410	504.702 STRUCTURAL STEEL FABRICATED AND DELIVERED, WELDED	LUMP	LUMP			
0420	504.71 STRUCTURAL STEEL ERECTION	LUMP	LUMP			
0430	505.08 SHEAR CONNECTORS	LUMP	LUMP			

CONTRACT ID: 015094.00 PROJECT(S): BR-1509(400)X

CONTRACTOR :_____

LINE NO	ITEM DESCRIPTION	APPROX. QUANTITY AND UNITS	UNIT PRICE DOLLARS	UNIT PRICE CTS	BID AMOUNT DOLLARS	BID AMOUNT CTS
0440	506.9102 ZINC RICH COATING SYSTEM (SHOP APPLIED)	LUMP	LUMP			
0450	507.0831 STEEL BRIDGE RAILING, 4 BAR	LUMP	LUMP			
0460	508.14 HIGH PERFORMANCE WATERPROOFING MEMBRANE	LUMP	LUMP			
0470	511.07 COFFERDAM: PIER NO.1	LUMP	LUMP			
0480	512.081 FRENCH DRAINS	LUMP	LUMP			
0490	514.06 CURING BOX FOR CONCRETE CYLINDERS	1.000 EA				
0500	515.21 PROTECTIVE COATING FOR CONCRETE SURFACES	LUMP	LUMP			
0510	521.23 EXPANSION DEVISE FINGER JOINT	2.000 EA				
0520	521.32 FABRIC TROUGH FOR FINGER JOINT	2.000 EA				
0530	523.5551 POT OR DISC BEARINGS, FIXED	3.000 EA				
0540	523.5552 POT OR DISC BEARINGS, EXPANSION	22.000 EA				

CONTRACT ID: 015094.00 PROJECT(S): BR-1509(400)X

CONTRACTOR :_____

LINE NO	ITEM DESCRIPTION	APPROX. QUANTITY AND UNITS	UNIT PRICE DOLLARS	UNIT PRICE CTS	BID AMOUNT DOLLARS	BID AMOUNT CTS
0550	524.40 PROTECTIVE SHIELD	LUMP	LUMP			
0560	526.301 TEMPORARY CONCRETE BARRIER TYPE I	LUMP	LUMP			
0570	526.34 PERMANENT CONCRETE TRANSITION BARRIER	4.000 EA				
0580	527.34 WORK ZONE CRASH CUSHIONS	3.000 UN				
0590	535.31 PRECAST STRUCTURAL CONCRETE WALL PANELS	LUMP	LUMP			
0600	603.16 15 INCH CULVERT PIPE OPTION I	56.000 LF				
0610	603.179 18 INCH CULVERT PIPE OPTION III	55.000 LF				
0620	603.199 24 INCH CULVERT PIPE OPTION III	71.000 LF				
0630	604.092 CATCH BASIN TYPE B1-C	12.000 EA				
0640	605.09 6 INCH UNDERDRAIN TYPE B	540.000 LF				
0650	605.10 6 INCH UNDERDRAIN OUTLET	20.000 LF				

CONTRACT ID: 015094.00 PROJECT(S): BR-1509(400)X

CONTRACTOR :_____

LINE NO	ITEM DESCRIPTION	APPROX. QUANTITY AND UNITS	UNIT PRICE DOLLARS	UNIT PRICE CTS	BID AMOUNT DOLLARS	BID AMOUNT CTS
0660	605.11 12 INCH UNDERDRAIN TYPE C	160.000 LF				
0670	605.13 18 INCH UNDERDRAIN TYPE C	230.000 LF				
0680	605.15 24 INCH UNDERDRAIN TYPE C	450.000 LF				
0690	606.1721 BRIDGE TRANSITION - TYPE 1	4.000 EA				
0700	606.23 GUARDRAIL TYPE 3C - SINGLE RAIL	435.000 LF				
0710	606.232 GUARDRAIL TYPE 3C - OVER 15 FOOT RADIUS	37.500 LF				
0720	606.258 CABLE RELEASING TERMINAL ANCHORAGE ASSEMBLY	2.000 EA				
0730	606.265 TERMINAL END - SINGLE RAIL - GALVANIZED STEEL	2.000 EA				
0740	606.353 REFLECTORIZED FLEXIBLE GUARDRAIL MARKER	8.000 EA				
0750	606.363 GUARDRAIL REMOVE AND DISPOSE	870.000 LF				
0760	606.47 SINGLE WOOD POST	4.000 EA				

CONTRACT ID: 015094.00 PROJECT(S): BR-1509(400)X

CONTRACTOR :_____

LINE NO	ITEM DESCRIPTION	APPROX. QUANTITY AND UNITS	UNIT PRICE DOLLARS	UNIT PRICE CTS	BID AMOUNT DOLLARS	BID AMOUNT CTS
0770	606.551 GUARDRAIL TYPE 3 - SINGLE RAIL WITH RUB RAIL	650.000 LF				
0780	606.79 GUARDRAIL 350 FLARED TERMINAL	3.000 EA				
0790	607.163 CHAIN LINK FENCE - 4 FOOT P.V.C. COATED	330.000 LF				
0800	607.184 CHAIN LINK SNOW FENCE 3 FOOT	310.000 LF				
0810	607.35 BRACING ASSEMBLY CHAIN LINK FENCE PVC COATED	8.000 EA				
0820	609.31 CURB TYPE 3	1425.000 LF				
0830	609.40 RESET CURB TYPE 5	200.000 LF				
0840	609.441 CURBING REMOVED AND STACKED	84.000 LF				
0850	610.08 PLAIN RIPRAP	210.000 CY				
0860	610.16 HEAVY RIPRAP	2150.000 CY				
0870	613.319 EROSION CONTROL BLANKET	450.000 SY				

CONTRACT ID: 015094.00 PROJECT(S): BR-1509(400)X

CONTRACTOR :_____

LINE NO	ITEM DESCRIPTION	APPROX. QUANTITY AND UNITS	UNIT PRICE DOLLARS	UNIT PRICE CTS	BID AMOUNT DOLLARS	BID AMOUNT CTS
0880	615.07 LOAM	320.000 CY				
0890	618.1301 SEEDING METHOD NUMBER 1 - PLAN QUANTITY	33.000 UN				
0900	618.1411 SEEDING METHOD NUMBER 3 - PLAN QUANTITY	47.000 UN				
0910	618.143 SPECIAL SEED MIX:	15.000 UN				
0920	619.1201 MULCH - PLAN QUANTITY	80.000 UN				
0930	620.54 STABILIZATION GEOTEXTILE	420.000 SY				
0940	620.6012 HDPE GEOMEMBRANE	2900.000 SY				
0950	621.5351 DECIDUOUS SHRUBS (15 INCH - 18 INCH) GROUP A	72.000 EA				
0960	621.5352 DECIDUOUS SHRUBS (18 INCH - 24 INCH) GROUP A	108.000 EA				
0970	621.546 DECIDUOUS SHRUBS (2 FOOT - 3 FOOT) GROUP A	160.000 EA				
0980	621.547 DECIDUOUS SHRUBS (2 FOOT - 3 FOOT) GROUP B	100.000 EA				

CONTRACT ID: 015094.00 PROJECT(S): BR-1509(400)X

CONTRACTOR :_____

LINE NO	ITEM DESCRIPTION	APPROX. QUANTITY AND UNITS	UNIT PRICE DOLLARS	UNIT PRICE CTS	BID AMOUNT DOLLARS	BID AMOUNT CTS
0990	621.97 ENGINEERED WOODY DEBRIS	LUMP	LUMP			
1000	627.711 WHITE OR YELLOW PAINTED PAVEMENT MARKING LINE (PLAN QUANTITY)	6200.000 LF				
1010	627.75 WHITE OR YELLOW PAVEMENT AND CURB MARKING	300.000 SF				
1020	627.76 TEMPORARY PVMT. MARK LINE, W OR YELLOW	LUMP	LUMP			
1030	627.77 REMOVING PAVEMENT MARKINGS	1970.000 SF				
1040	629.05 HAND LABOR, STRAIGHT TIME	24.000 HR				
1050	631.12 ALL PURPOSE EXCAVATOR (INCLUDING OPERATOR)	24.000 HR				
1060	631.13 BULLDOZER (INCLUDING OPERATOR)	24.000 HR				
1070	631.14 GRADER (INCLUDING OPERATOR)	24.000 HR				
1080	631.171 TRUCK - SMALL (INCLUDING OPERATOR)	24.000 HR				
1090	631.20 STUMP CHIPPER (INCLUDING OPERATOR)	8.000 HR				

CONTRACT ID: 015094.00 PROJECT(S): BR-1509(400)X

CONTRACTOR :_____

LINE NO	ITEM DESCRIPTION	APPROX. QUANTITY AND UNITS		UNIT PRICE DOLLARS	UNIT PRICE CTS	BID AMOUNT DOLLARS	BID AMOUNT CTS
1100	631.22 FRONT END LOADER (INCLUDING OPERATOR)	24.000	HR				
1110	631.32 CULVERT CLEANER (INCLUDING OPERATOR)	8.000	HR				
1120	631.36 FOREPERSON	24.000	HR				
1130	636.40 MECHANICALLY STABILIZED EARTH RETAINING WALL W/STEEL STRAPS	1300.000	SF				
1140	637.071 DUST CONTROL	LUMP	LUMP				
1150	639.18 FIELD OFFICE TYPE A	1.000	EA				
1160	652.312 TYPE III BARRICADE	8.000	EA				
1170	652.33 DRUM	20.000	EA				
1180	652.34 CONE	20.000	EA				
1190	652.35 CONSTRUCTION SIGNS	120.000	SF				
1200	652.361 MAINTENANCE OF TRAFFIC CONTROL DEVICES	LUMP	LUMP				

CONTRACT ID: 015094.00 PROJECT(S): BR-1509(400)X

CONTRACTOR :_____

LINE NO	ITEM DESCRIPTION	APPROX. QUANTITY AND UNITS	UNIT PRICE DOLLARS	UNIT PRICE CTS	BID AMOUNT DOLLARS	BID AMOUNT CTS
1210	652.38 FLAGGER	650.000 HR				
1220	656.75 TEMPORARY SOIL EROSION AND WATER POLLUTION CONTROL	LUMP	LUMP			
1230	659.10 MOBILIZATION	LUMP	LUMP			
1240	660.21 ON-THE-JOB TRAINING (BID)	3000.000 HR				
	SECTION 0001 TOTAL					.

SECTION 0002 PORTLAND WATER DISTRICT WATER MAIN

1250	203.26 GRAVEL BORROW PORTLAND WATER DISTRICT	100.000 CY				
1260	625.01 WATER LINE SYSTEM TEMPORARY	LUMP	LUMP			
1270	822.363 12 INCH CLASS 52 DUCTILE IRON PIPE PUSH ON JOINT	640.000 LF				
1280	822.363 12 INCH CLASS 52 DUCTILE IRON PIPE RESTR JT, PRE-INSUL IN CARRIER PIPE	910.000 LF				
1290	822.363 12 INCH CLASS 52 DUCTILE IRON PIPE RESTRAINED JOINT	75.000 LF				

CONTRACT ID: 015094.00 PROJECT(S): BR-1509(400)X

CONTRACTOR :_____

LINE NO	ITEM DESCRIPTION	APPROX. QUANTITY AND UNITS	UNIT PRICE DOLLARS	UNIT PRICE CTS	BID AMOUNT DOLLARS	BID AMOUNT CTS
1300	823.31 12 INCH GATE VALVE	1.000 EA				
1310	823.31 12 INCH GATE VALVE INSERTION	1.000 EA				
1320	823.3252 8" TAPPING SLEEVE AND VALVE	1.000 EA				
1330	823.34 BLOW OFF VALVE ASSEMBLY 2"	1.000 EA				
1340	823.341 AIR RELEASE VALVE 1"	2.000 EA				
1350	824.30 FIRE HYDRANT	1.000 EA				
1360	825.43 1" COPPER SERVICE	4.000 LF				
1370	827.302 UNSUITABLE SOIL EXCAVATION - BELOW GRADE	50.000 CY				
1380	845.10 STRUCTURAL STEEL UTILITY SUPPORT	LUMP	LUMP			
	SECTION 0002 TOTAL					.

SECTION 0003 NORTHERN NEW ENGLAND TELEPHONE OPERATION, LLC (FAIRPOINT)
OPTIONAL

CONTRACT ID: 015094.00 PROJECT(S): BR-1509(400)X

CONTRACTOR :_____

LINE NO	ITEM DESCRIPTION	APPROX. QUANTITY AND UNITS	UNIT PRICE DOLLARS	UNIT PRICE CTS	BID AMOUNT DOLLARS	BID AMOUNT CTS
1390	806.67 FIBERGLASS CONDUIT SYSTEM	LUMP	LUMP			
	SECTION 0003 TOTAL					
	TOTAL BID					

CONTRACT AGREEMENT, OFFER & AWARD

AGREEMENT made on the date last signed below, by and between the State of Maine, acting through and by its Department of Transportation (Department), an agency of state government with its principal administrative offices located at Child Street Augusta, Maine, with a mailing address at 16 State House Station, Augusta, Maine 04333-0016, and _____ a corporation or other legal entity organized under the laws of the State of _____, with its principal place of business located at _____ _____

The Department and the Contractor, in consideration of the mutual promises set forth in this Agreement (the "Contract"), hereby agree as follows:

A. The Work.

The Contractor agrees to complete all Work as specified or indicated in the Contract including Extra Work in conformity with the Contract, PIN **015094.00**, for the **Railroad Crossing Bridge** in the town of **Falmouth**, County of **Cumberland**, Maine. The Work includes construction, maintenance during construction, warranty as provided in the Contract, and other incidental work.

The Contractor shall be responsible for furnishing all supervision, labor, equipment, tools supplies, permanent materials and temporary materials required to perform the Work including construction quality control including inspection, testing and documentation, all required documentation at the conclusion of the project, warranting its work and performing all other work indicated in the Contract.

The Department shall have the right to alter the nature and extent of the Work as provided in the Contract; payment to be made as provided in the same.

B. Time.

The Contractor agrees to complete all Work, except warranty work, on or before **June 1, 2012.** Further, the Department may deduct from moneys otherwise due the Contractor, not as a penalty, but as Liquidated Damages in accordance with Sections 107.7 and 107.8 of the State of Maine Department of Transportation Standard Specifications, Revision of December 2002 and related Special Provisions.

C. Price.

The quantities given in the Schedule of Items of the Bid Package will be used as the basis for determining the original Contract amount and for determining the amounts of the required Performance Surety Bond and Payment Surety Bond, and that the amount of this offer is

Section 0001 $_____

Section 0002 $_____

Section 0003 $_____

Performance Bond and Payment Bond each being 100% of the amount awarded under this Contract (see award amount in Section G below).

D. Contract.

This Contract, which may be amended, modified, or supplemented in writing only, consists of the Contract documents as defined in the Plans, Standard Specifications, Revision of December 2002, Standard Details Revision of December 2002 as updated through advertisement, Supplemental Specifications, Special Provisions, Contract Agreement; and Contract Bonds. It is agreed and understood that this Contract will be governed by the documents listed above.

E. Certifications.

By signing below, the Contractor hereby certifies that to the best of the Contractor's knowledge and belief:

1. All of the statements, representations, covenants, and/or certifications required or set forth in the Bid and the Bid Documents, including those in Appendix A to Division 100 of the Standard Specifications Revision of December 2002 (Federal Contract Provisions Supplement), and the Contract are still complete and accurate as of the date of this Agreement.

2. The Contractor knows of no legal, contractual, or financial impediment to entering into this Contract.

3. The person signing below is legally authorized by the Contractor to sign this Contract on behalf of the Contractor and to legally bind the Contractor to the terms of the Contract.

F. Offer.

The undersigned, having carefully examined the site of work, the Plans, Standard Specifications Revision of December 2002, Standard Details Revision of December 2002 as updated through advertisement, Supplemental Specifications, Special Provisions, Contract Agreement; and Contract Bonds contained herein for construction of: **PIN 015094.00 Railroad Crossing Bridge**, State of Maine, on which bids will be received until the time specified in the "Notice to Contractors" do(es) hereby bid and offer to enter into this contract to supply all the materials, tools, equipment and labor to construct the whole of the Work in strict accordance with the terms and conditions of this Contract at the unit prices in the attached "Schedule of Items".

The Offeror agrees to perform the work required at the price specified above and in accordance with the bids provided in the attached "Schedule of Items" in strict accordance with the terms of this solicitation, and to provide the appropriate insurance and bonds if this offer is accepted by the Government in writing.

As Offeror also agrees:

First: To do any extra work, not covered by the attached "Schedule of Items", which may be ordered by the Resident, and to accept as full compensation the amount determined upon a "Force Account" basis as provided in the Standard Specifications, Revision of December 2002, and as addressed in the contract documents.

Second: That the bid bond at 5% of the bid amount or the official bank check, cashier's check, certificate of deposit or U. S. Postal Money Order in the amount given in the "Notice to Contractors", payable to the Treasurer of the State of Maine and accompanying this bid, shall be forfeited, as liquidated damages, if in case this bid is accepted, and the undersigned shall fail to abide by the terms and conditions of the offer and fail to furnish satisfactory insurance and Contract bonds under the conditions stipulated in the Specifications within 15 days of notice of intent to award the contract.

Third: To begin the Work as stated in Section 107.2 of the Standard Specifications Revision of December 2002 and complete the Work within the time limits given in the Special Provisions of this Contract.

Fourth: The Contractor will be bound to the Disadvantaged Business Enterprise (DBE) Requirements contained in the attached Notice (Additional Instructions to Bidders) and submit a completed Contractor's Disadvantaged Business Enterprise Utilization Plan with their bid.

Fifth: That this offer shall remain open for 30 calendar days after the date of opening of bids.

Sixth: The Bidder hereby certifies, to the best of its knowledge and belief that: the Bidder has not, either directly or indirectly, entered into any agreement, participated in any collusion, or otherwise taken any action in restraint of competitive bidding in connection with its bid, and its subsequent contract with the Department.

IN WITNESS WHEREOF, the Contractor, for itself, its successors and assigns, hereby execute two duplicate originals of this Agreement and thereby binds itself to all covenants, terms, and obligations contained in the Contract Documents.

CONTRACTOR

_____	_____
Date	(Signature of Legally Authorized Representative of the Contractor)
_____	_____
Witness	(Name and Title Printed)

G. Award.

Your offer is hereby accepted for (see checked boxes):

Section 0001 ❑
Section 0002 ❑
Section 0003 ❑

Contract Amount: _____

This award consummates the Contract, and the documents referenced herein.

MAINE DEPARTMENT OF TRANSPORTATION

_____	_____
Date	By: David A. Cole, Commissioner
_____	
Witness	

CONTRACT AGREEMENT, OFFER & AWARD

AGREEMENT made on the date last signed below, by and between the State of Maine, acting through and by its Department of Transportation (Department), an agency of state government with its principal administrative offices located at Child Street Augusta, Maine, with a mailing address at 16 State House Station, Augusta, Maine 04333-0016, and _____ a corporation or other legal entity organized under the laws of the State of _____, with its principal place of business located at _____ _____

The Department and the Contractor, in consideration of the mutual promises set forth in this Agreement (the "Contract"), hereby agree as follows:

A. The Work.

The Contractor agrees to complete all Work as specified or indicated in the Contract including Extra Work in conformity with the Contract, PIN **015094.00**, for the **Railroad Crossing Bridge** in the town of **Falmouth**, County of **Cumberland**, Maine. The Work includes construction, maintenance during construction, warranty as provided in the Contract, and other incidental work.

The Contractor shall be responsible for furnishing all supervision, labor, equipment, tools supplies, permanent materials and temporary materials required to perform the Work including construction quality control including inspection, testing and documentation, all required documentation at the conclusion of the project, warranting its work and performing all other work indicated in the Contract.

The Department shall have the right to alter the nature and extent of the Work as provided in the Contract; payment to be made as provided in the same.

B. Time.

The Contractor agrees to complete all Work, except warranty work, on or before **June 1, 2012.** Further, the Department may deduct from moneys otherwise due the Contractor, not as a penalty, but as Liquidated Damages in accordance with Sections 107.7 and 107.8 of the State of Maine Department of Transportation Standard Specifications, Revision of December 2002 and related Special Provisions.

C. Price.

The quantities given in the Schedule of Items of the Bid Package will be used as the basis for determining the original Contract amount and for determining the amounts of the required Performance Surety Bond and Payment Surety Bond, and that the amount of this offer is

Section 0001 $_____

Section 0002 $_____

Section 0003 $_____

Performance Bond and Payment Bond each being 100% of the amount awarded under this Contract (see award amount in Section G below).

D. Contract.

This Contract, which may be amended, modified, or supplemented in writing only, consists of the Contract documents as defined in the Plans, Standard Specifications, Revision of December 2002, Standard Details Revision of December 2002 as updated through advertisement, Supplemental Specifications, Special Provisions, Contract Agreement; and Contract Bonds. It is agreed and understood that this Contract will be governed by the documents listed above.

E. Certifications.

By signing below, the Contractor hereby certifies that to the best of the Contractor's knowledge and belief:

1. All of the statements, representations, covenants, and/or certifications required or set forth in the Bid and the Bid Documents, including those in Appendix A to Division 100 of the Standard Specifications Revision of December 2002 (Federal Contract Provisions Supplement), and the Contract are still complete and accurate as of the date of this Agreement.

2. The Contractor knows of no legal, contractual, or financial impediment to entering into this Contract.

3. The person signing below is legally authorized by the Contractor to sign this Contract on behalf of the Contractor and to legally bind the Contractor to the terms of the Contract.

F. Offer.

The undersigned, having carefully examined the site of work, the Plans, Standard Specifications Revision of December 2002, Standard Details Revision of December 2002 as updated through advertisement, Supplemental Specifications, Special Provisions, Contract Agreement; and Contract Bonds contained herein for construction of: **PIN 015094.00 Railroad Crossing Bridge**, State of Maine, on which bids will be received until the time specified in the "Notice to Contractors" do(es) hereby bid and offer to enter into this contract to supply all the materials, tools, equipment and labor to construct the whole of the Work in strict accordance with the terms and conditions of this Contract at the unit prices in the attached "Schedule of Items".

The Offeror agrees to perform the work required at the price specified above and in accordance with the bids provided in the attached "Schedule of Items" in strict accordance with the terms of this solicitation, and to provide the appropriate insurance and bonds if this offer is accepted by the Government in writing.

As Offeror also agrees:

First: To do any extra work, not covered by the attached "Schedule of Items", which may be ordered by the Resident, and to accept as full compensation the amount determined upon a "Force Account" basis as provided in the Standard Specifications, Revision of December 2002, and as addressed in the contract documents.

Second: That the bid bond at 5% of the bid amount or the official bank check, cashier's check, certificate of deposit or U. S. Postal Money Order in the amount given in the "Notice to Contractors", payable to the Treasurer of the State of Maine and accompanying this bid, shall be forfeited, as liquidated damages, if in case this bid is accepted, and the undersigned shall fail to abide by the terms and conditions of the offer and fail to furnish satisfactory insurance and Contract bonds under the conditions stipulated in the Specifications within 15 days of notice of intent to award the contract.

Third: To begin the Work as stated in Section 107.2 of the Standard Specifications Revision of December 2002 and complete the Work within the time limits given in the Special Provisions of this Contract.

Fourth: The Contractor will be bound to the Disadvantaged Business Enterprise (DBE) Requirements contained in the attached Notice (Additional Instructions to Bidders) and submit a completed Contractor's Disadvantaged Business Enterprise Utilization Plan with their bid.

Fifth: That this offer shall remain open for 30 calendar days after the date of opening of bids.

Sixth: The Bidder hereby certifies, to the best of its knowledge and belief that: the Bidder has not, either directly or indirectly, entered into any agreement, participated in any collusion, or otherwise taken any action in restraint of competitive bidding in connection with its bid, and its subsequent contract with the Department.

IN WITNESS WHEREOF, the Contractor, for itself, its successors and assigns, hereby execute two duplicate originals of this Agreement and thereby binds itself to all covenants, terms, and obligations contained in the Contract Documents.

CONTRACTOR

_____	_____
Date	(Signature of Legally Authorized Representative of the Contractor)
_____	_____
Witness	(Name and Title Printed)

G. Award.

Your offer is hereby accepted for (see checked boxes):

Section 0001 ❑
Section 0002 ❑
Section 0003 ❑

Contract Amount: _____

This award consummates the Contract, and the documents referenced herein.

MAINE DEPARTMENT OF TRANSPORTATION

_____	_____
Date	By: David A. Cole, Commissioner
_____	
Witness	

CONTRACT AGREEMENT, OFFER & AWARD

AGREEMENT made on the date last signed below, by and between the State of Maine, acting through and by its Department of Transportation (Department), an agency of state government with its principal administrative offices located at Child Street Augusta, Maine, with a mailing address at 16 State House Station, Augusta, Maine 04333-0016, and **(Name of the firm bidding the job)** a corporation or other legal entity organized under the laws of the State of Maine, with its principal place of business located at **(address of the firm bidding the job)**

The Department and the Contractor, in consideration of the mutual promises set forth in this Agreement (the "Contract"), hereby agree as follows:

SAMPLE

A. The Work.

The Contractor agrees to complete all Work as specified or indicated in the Contract including Extra Work in conformity with the Contract, PIN No.**1224.00**, for the **Hot Mix Asphalt Overlay** in the town/city of **South Nowhere,** County of **Washington**, Maine. The Work includes construction, maintenance during construction, warranty as provided in the Contract, and other incidental work.

The Contractor shall be responsible for furnishing all supervision, labor, equipment, tools supplies, permanent materials and temporary materials required to perform the Work including construction quality control including inspection, testing and documentation, all required documentation at the conclusion of the project, warranting its work and performing all other work indicated in the Contract.

The Department shall have the right to alter the nature and extent of the Work as provided in the Contract; payment to be made as provided in the same.

B. Time.

The Contractor agrees to complete all Work, except warranty work, on or before **November 15, 2006.** Further, the Department may deduct from moneys otherwise due the Contractor, not as a penalty, but as Liquidated Damages in accordance with Sections 107.7 and 107.8 of the State of Maine Department of Transportation Standard Specifications, Revision of December 2002 and related Special Provisions.

C. Price.

The quantities given in the Schedule of Items of the Bid Package will be used as the basis for determining the original Contract amount and for determining the amounts of the required Performance Surety Bond and Payment Surety Bond, and that the amount of this offer is **____(Place bid here in alphabetical form such as One Hundred and Two dollars and 10 cents)** **$_ (repeat bid here in numerical terms, such as $102.10)**_____ Performance Bond and Payment Bond each being 100% of the amount of this Contract.

D. Contract.

This Contract, which may be amended, modified, or supplemented in writing only, consists of the Contract documents as defined in the Plans, Standard Specifications, Revision of December 2002, Standard Details Revision of December 2002, Supplemental Specifications, Special Provisions, Contract Agreement; and Contract Bonds. It is agreed and understood that this Contract will be governed by the documents listed above.

E. Certifications.

By signing below, the Contractor hereby certifies that to the best of the Contractor's knowledge and belief:

1. All of the statements, representations, covenants, and/or certifications required or set forth in the Bid and the Bid Documents, including those in Appendix A to Division 100 of the Standard Specifications Revision of December 2002 (Federal Contract Provisions Supplement), and the Contract are still complete and accurate as of the date of this Agreement.

2. The Contractor knows of no legal, contractual, or financial impediment to entering into this Contract.

3. The person signing below is legally authorized by the Contractor to sign this Contract on behalf of the Contractor and to legally bind the Contractor to the terms of the Contract.

SAMPLE

F. Offer.

The undersigned, having carefully examined the site of work, the Plans, Standard Specifications, Revision of December 2002, Standard Details Revision of December 2002, Supplemental Specifications, Special Provisions, Contract Agreement; and Contract Bonds contained herein for construction of:

PIN 1234.00 South Nowhere, Hot Mix Asphalt Overlay,

State of Maine, on which bids will be received until the time specified in the "Notice to Contractors" do(es) hereby bid and offer to enter into this contract to supply all the materials, tools, equipment and labor to construct the whole of the Work in strict accordance with the terms and conditions of this Contract at the unit prices in the attached "Schedule of Items".

The Offeror agrees to perform the work required at the price specified above and in accordance with the bids provided in the attached "Schedule of Items" in strict accordance with the terms of this solicitation, and to provide the appropriate insurance and bonds if this offer is accepted by the Government in writing.

As Offeror also agrees:

First: To do any extra work, not covered by the attached "Schedule of Items", which may be ordered by the Resident, and to accept as full compensation the amount determined upon a "Force Account" basis as provided in the Standard Specifications, Revision of December 2002, and as addressed in the contract documents.

Second: That the bid bond at 5% of the bid amount or the official bank check, cashier's check, certificate of deposit or U. S. Postal Money Order in the amount given in the "Notice to Contractors", payable to the Treasurer of the State of Maine and accompanying this bid, shall be forfeited, as liquidated damages, if in case this bid is accepted, and the undersigned shall fail to abide by the terms and conditions of the offer and fail to furnish satisfactory insurance and Contract bonds under the conditions stipulated in the Specifications within 15 days of notice of intent to award the contract.

Third: To begin the Work as stated in Section 107.2 of the Standard Specifications Revision of 2002 and complete the Work within the time limits given in the Special Provisions of this Contract.

Fourth: The Contractor will be bound to the Disadvantaged Business Enterprise (DBE) Requirements contained in the attached Notice (Additional Instructions to Bidders) and submit a completed Contractor's Disadvantaged Business Enterprise Utilization Plan with their bid.

Fifth: That this offer shall remain open for 30 calendar days after the date of opening of bids.

SAMPLE

Sixth: The Bidder hereby certifies, to the best of its knowledge and belief that: the Bidder has not, either directly or indirectly, entered into any agreement, participated in any collusion, or otherwise taken any action in restraint of competitive bidding in connection with its bid, and its subsequent contract with the Department.

IN WITNESS WHEREOF, the Contractor, for itself, its successors and assigns, hereby execute two duplicate originals of this Agreement and thereby binds itself to all covenants, terms, and obligations contained in the Contract Documents.

CONTRACTOR

_____	**(Sign Here)**
Date	(Signature of Legally Authorized Representative of the Contractor)
____(**Witness Sign Here)**	**(Print Name Here)**
Witness	(Name and Title Printed)

SAMPLE

G. Award.

Your offer is hereby accepted. This award consummates the Contract, and the documents referenced herein.

MAINE DEPARTMENT OF TRANSPORTATION

_____	_____
Date	By: David A. Cole, Commissioner

_____
(Witness)

BOND # _____

CONTRACT PERFORMANCE BOND
(Surety Company Form)

KNOW ALL MEN BY THESE PRESENTS: That _____ _____ **in the State of** _____, as principal, and……....., a corporation duly organized under the laws of the State of ..... and having a usual place of business ...., as Surety, are held and firmly bound unto the Treasurer of the State of Maine in the sum of _____ **and 00/100 Dollars ($)**, to be paid said Treasurer of the State of Maine or his successors in office, for which payment well and truly to be made, Principal and Surety bind themselves, their heirs, executors and administrators, successors and assigns, jointly and severally by these presents.

The condition of this obligation is such that if the Principal designated as Contractor in the Contract to construct Project Number _____ in the Municipality of _____ promptly and faithfully performs the Contract, then this obligation shall be null and void; otherwise it shall remain in full force and effect.

The Surety hereby waives notice of any alteration or extension of time made by the State of Maine.

Signed and sealed this ..... day of ....., 20….. .

WITNESSES:	SIGNATURES:
	CONTRACTOR:
Signature.....	.....….....
Print Name Legibly	Print Name Legibly ...….....
	SURETY:
Signature	....….....
Print Name Legibly	Print Name Legibly .....
SURETY ADDRESS:	NAME OF LOCAL AGENCY:
.....	ADDRESS .....
.....	...…….....
.....	.....…….....
TELEPHONE.....	.....…….....

SAMPLE

BOND # _____

CONTRACT PAYMENT BOND
(Surety Company Form)

KNOW ALL MEN BY THESE PRESENTS: That _____ _____ **in the State of** _____, as principal, and.....….....
a corporation duly organized under the laws of the State of ..... and having a usual place of business in .....……., as Surety, are held and firmly bound unto the Treasurer of the State of Maine for the use and benefit of claimants as herein below defined, in the sum of _____ **and 00/100 Dollars ($)** for the payment whereof Principal and Surety bind themselves, their heirs, executors and administrators, successors and assigns, jointly and severally by these presents.

The condition of this obligation is such that if the Principal designated as Contractor in the Contract to construct Project Number _____ in the Municipality of _____ promptly satisfies all claims and demands incurred for all labor and material, used or required by him in connection with the work contemplated by said Contract, and fully reimburses the obligee for all outlay and expense which the obligee may incur in making good any default of said Principal, then this obligation shall be null and void; otherwise it shall remain in full force and effect.

A claimant is defined as one having a direct contract with the Principal or with a Subcontractor of the Principal for labor, material or both, used or reasonably required for use in the performance of the contract.

Signed and sealed this ..... day of ...……....., 20 ... .

WITNESS:	SIGNATURES:
	CONTRACTOR:
Signature…….....	.....….....
Print Name Legibly .....……..	Print Name Legibly ….....
	SURETY:
Signature.....	...….....
Print Name Legibly	Print Name Legibly ….....
SURETY ADDRESS:	NAME OF LOCAL AGENCY:
...….....	ADDRESS ….....
.....	…….....
TELEPHONE	…….....

SAMPLE

BRIDGE NO. 2702

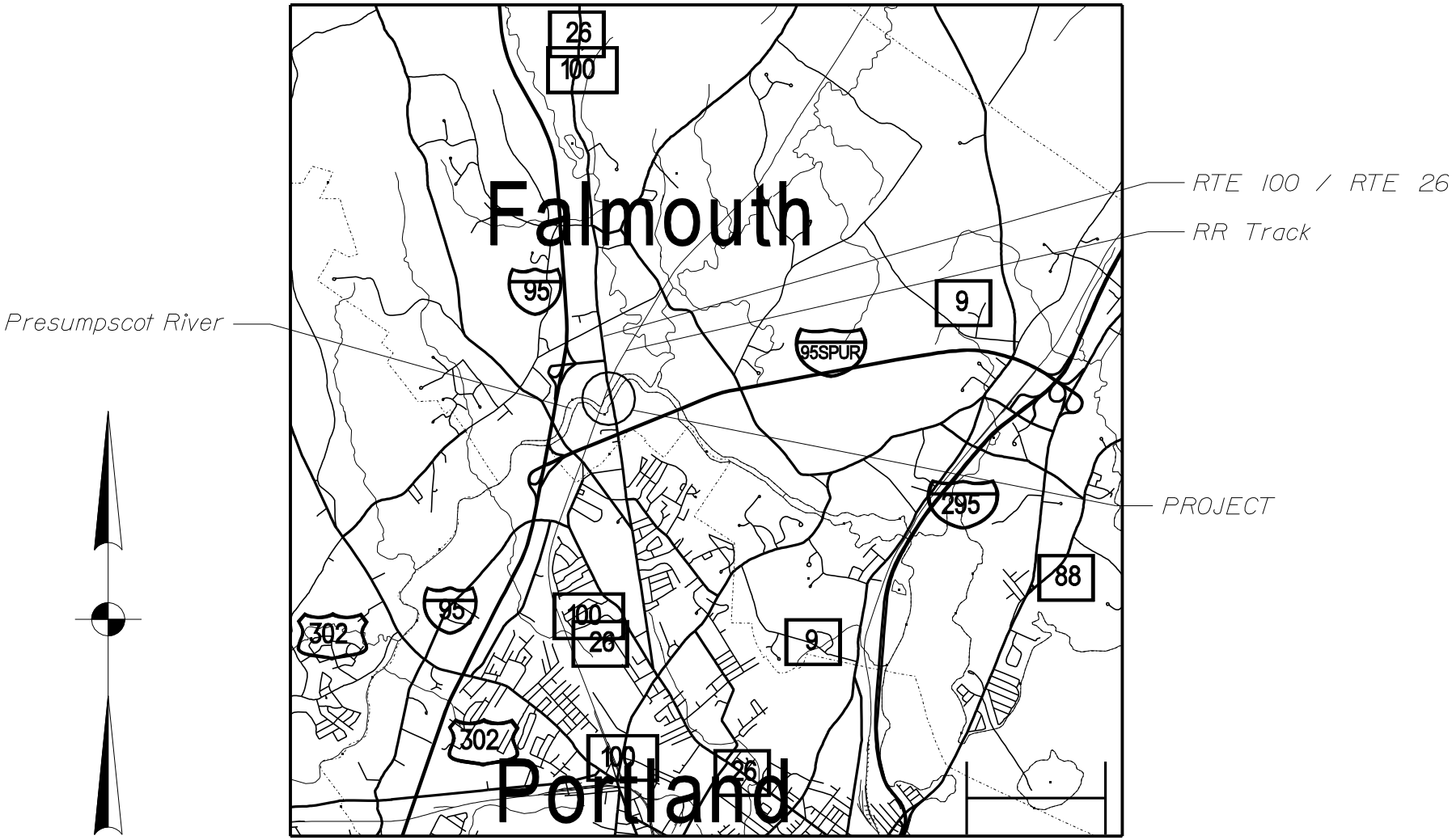

LOCATION MAP

General Decision Number: ME080006 06/12/2009 ME6

Superseded General Decision Number: ME20070006

State: Maine

Construction Type: Heavy

County: Cumberland County in Maine.

HEAVY CONSTRUCTION PROJECTS (Includes Sewer and Water Line Construction Projects)

Modification Number	Publication Date
0	02/08/2008
1	12/19/2008
2	01/30/2009
3	06/12/2009

BOIL0029-003 10/01/2008

	Rates	Fringes
BOILERMAKER	$ 30.19	8.96+26.6%

---

* ELEC0567-003 06/01/2009

	Rates	Fringes
ELECTRICIAN	$ 27.83	12.88

SUME2000-005 10/24/2000

	Rates	Fringes
Laborers:		
Unskilled	$ 12.43	.95
Power equipment operators:		
Backhoes	$ 13.75	1.42
Bulldozers	$ 11.25	1.31
Excavators	$ 13.79	1.86
Loaders	$ 10.95	1.22
Truck drivers:		
Dump	$ 9.50	.89

WELDERS - Receive rate prescribed for craft performing operation to which welding is incidental.
==========

Unlisted classifications needed for work not included within the scope of the classifications listed may be added after award only as provided in the labor standards contract clauses (29CFR 5.5 (a) (1) (ii)).

In the listing above, the "SU" designation means that rates listed under the identifier do not reflect collectively bargained wage and fringe benefit rates. Other designations indicate unions whose rates have been determined to be prevailing.

WAGE DETERMINATION APPEALS PROCESS

1.) Has there been an initial decision in the matter? This can be:

* an existing published wage determination
* a survey underlying a wage determination
* a Wage and Hour Division letter setting forth a position on a wage determination matter
* a conformance (additional classification and rate) ruling

On survey related matters, initial contact, including requests for summaries of surveys, should be with the Wage and Hour Regional Office for the area in which the survey was conducted because those Regional Offices have responsibility for the Davis-Bacon survey program. If the response from this initial contact is not satisfactory, then the process described in 2.) and 3.) should be followed.

With regard to any other matter not yet ripe for the formal process described here, initial contact should be with the Branch of Construction Wage Determinations. Write to:

Branch of Construction Wage Determinations
Wage and Hour Division
U.S. Department of Labor
200 Constitution Avenue, N.W.
Washington, DC 20210

2.) If the answer to the question in 1.) is yes, then an

interested party (those affected by the action) can request review and reconsideration from the Wage and Hour Administrator (See 29 CFR Part 1.8 and 29 CFR Part 7). Write to:

Wage and Hour Administrator
U.S. Department of Labor
200 Constitution Avenue, N.W.
Washington, DC 20210

The request should be accompanied by a full statement of the interested party's position and by any information (wage payment data, project description, area practice material, etc.) that the requestor considers relevant to the issue.

3.) If the decision of the Administrator is not favorable, an interested party may appeal directly to the Administrative Review Board (formerly the Wage Appeals Board). Write to:

Administrative Review Board
U.S. Department of Labor
200 Constitution Avenue, N.W.
Washington, DC 20210

4.) All decisions by the Administrative Review Board are final.

==========

END OF GENERAL DECISION

July 16, 2009

SPECIAL PROVISION
SECTION 102.3
EXAMINATION OF DOCUMENTS, SITE, AND OTHER INFORMATION
(Geotechnical Information)

Add the following to Section 102.3, Examination of Documents, Site and Other Information:

102.3.1 Geotechnical Information In most cases, Geotechnical Information pertaining to the project has been collected and assembled. Bidders and Contractors are obligated to examine and, if necessary, obtain geotechnical information. If one is available, the project geotechnical report may be accessed at the following web address:

http://www.maine.gov/mdot/comprehensive-list-projects/project-information.php.

The Department shall not be responsible for the Bidders' and Contractors' interpretations of or estimates or conclusions drawn from the Geotechnical Information. Data provided may not be representative of the subsurface conditions between the boring locations.

This section does not diminish the duties imposed upon parties in Section 102 or in any other sections.

SPECIAL SPECIFICATION

PROTECTION OF RAILROAD TRAFFIC AND STRUCTURES

INSTRUCTIONS: These instructions are not a part of the Special Specifications.

The Special Specification for the Protection of Railroad Traffic and Structures is, by Department policy, to be made a part of the highway contract documents for any project where work is to be done by the Contractor on or adjacent to the right of way of a railroad.

The Railroad is to complete the shaded areas on the form, the Department is to complete all other information. Where the information requested does not adequately describe the situation, that portion of the specification is to be revised as necessary. The limits of work to be established by the Department under "Inspection" will be no nearer the track than the limits specified by the Railroad.

This PRTS form was revised in December 2000. The modifications were primarily minor format changes, however, there was one clarification of content: wherever the word "days" was previously used, the term "calendar days" is now used. There were no other changes to the content of the document.

Town: **Falmouth**
Project:-**Proj. # BR-1509(400)X**
PIN 15094.00

12/3/09

SPECIAL PROVISION
PROTECTION OF RAILROAD TRAFFIC AND STRUCTURES

1. GENERAL REQUIREMENTS

Part of the work required by the Contract will be performed within a railroad right of way and/or adjacent to the tracks, telephone, telegraph, signal and electric supply lines of a railroad or railroads. The Contractor agrees to perform all such work in compliance with all of the terms of this Special Provision and all safety rules, regulations, or standards applicable to the Railroad. The Contractor shall be fully responsible for all damages arising from his failure to comply with the requirements of this Special Provision. The Contractor shall be deemed to have included all costs in the unit prices of the Schedule of Prices and the Proposal.

2. AMOUNT OF RAILROAD WORK

The estimated amount of work to be done within **50** (feet) of the track of the **Portland Terminal Railway Co.** is **7.5%** of the contract.

3. NUMBER OF TRAINS AND TRAIN SPEED

The Contractor is notified that a maximum speed of (4**0** mph) will be considered as prevailing for the operation of trains of the Railroad at this project and that the approximate number of trains per day at this project is **8**.

4. PRIORITY OF RAILROAD OPERATIONS

The train movements of the Railroad, and its lessees, and licensees shall have absolute priority over the performance of the Construction Project within the railroad right of way. The Contractor hereby agrees that the hours and times of work within the Railroad right of way must be coordinated through the Railroad and that such hours and times are subject to change without prior notice to the Contractor, unless other prior arrangements have been made through the Railroad.

5. AUTHORITY OF RAILROAD TO STOP WORK

If the Contractor fails to comply with the safety terms of this Special Provision, or if the Chief Engineer of the Railroad determines that the Contractor is using unsafe practices that threaten the safety of rail traffic, rail workers, or the general public, the Railroad shall have the right to immediately order the Contractor to cease work and vacate the Railroad's property. The Railroad agrees to confirm any cessation of work in writing by delivering to the Department's Construction Manager a completed Stop Work Order form attached as Exhibit A within 24 hours of giving any such order.

6. ENTRY UPON RAILROAD PROPERTY

The Railroad hereby agrees to permit the Contractor, together with their subcontractors, suppliers, consultants and engineers (the "Contractor"), to enter upon the Railroad property for the purpose of performing the Construction Project, PROVIDED THAT the Contractor complies with all of the terms of this Special Provision and all safety requirements and directions of the Chief Engineer of the Railroad, or his authorized representative (the "Railroad's Chief Engineer").

7. NOTICE REQUIRED BEFORE ENTRY

The Contractor shall give written notice to the Railroad's Chief Engineer at least **fourteen (14)** calendar day(s) in advance of the time it proposes to do work within the limits of the Railroad right-of-way or perform operations that may create a Hazard as specified by this Special Provision. The Contractor shall give such notice regardless of whether the work may also be within the limits of a public highway.

8. HAZARDS

The Contractor shall assess to its own satisfaction hazards which may be caused by its operations. At a minimum, the Contractor agrees that the following shall constitute Hazards.

An operating track shall be considered fouled and subject to hazard when any object is brought nearer than (**15** feet) to the gauge line of the near rail of the track.

A signal line or communication line shall be considered fouled and subject to hazard when any object is brought nearer than (**10** feet) to any wire or cable.

An electric supply line shall be considered fouled and subject to hazard when any object is brought nearer than (**10** feet) to any wire of the line.

Cranes, trucks, power shovels or any other equipment shall be considered as fouling and subjecting to hazard a track, signal line, communication or electric supply line when working in such position that failure of equipment, with or without load, could foul the track, signal line, communication or electric supply line.

Railroad operation will be considered subject to hazard when explosives are used in the vicinity of railroad premises, or during the driving or pulling of sheeting for any footing adjacent to a track, or when erecting structural steel adjacent to a track, or when performing work under, across or adjacent to a track, or when operations involve, swinging booms or chutes that could in any way come nearer then (**15** feet) to the gauge line of the near rail of the track, or when erection or removal of staging, false work or forms fouls a track or wire line.

None of the operations specified as a Hazard above shall be carried on during the approach or passing of a train or without permission from the Railroad's Chief Engineer and the presence of a railroad inspector/flagman, unless other prior arrangements have been made through the Railroad.

9. MINIMUM CLEARANCES

During the construction of staging, false work or forms, the Contractor shall at all times maintain a minimum vertical clearance of **(22'(feet) 6"(inches)** above the top of high rail and a minimum side clearance of (**10 feet**) from the gauge line of the near rail where track is tangent. Additional side clearance must be maintained where track is on a curve.

10. WORK PLAN SUBMITTAL AND APPROVAL

The Contractor shall submit in writing to the Railroad's Chief Engineer or duly authorized representative, and the Departments Railroad Property Manager or his appointed representative, at least **fourteen (14)** calendar day(s) in advance of the start of the project, an outline of his plan for work within the Railroad right of way including contemplated method(s) of construction. This plan must meet with the approval of the Railroad's Chief Engineer and the Department's Railroad Property Manager in every respect. If the Contractor contemplates the use of "on the track equipment", it should so state and obtain from the Railroad the conditions pertaining to such operations. All Railroad costs included in this operation will be borne by the Contractor. In a like manner, any of the Contractor's equipment or material on cars for this project shall be handled in conformance with existing traffic rules with all costs borne by the Contractor.

Prior to submitting his Proposal, the Contractor shall have ascertained from the Railroad and from the Department's Railroad Property Manager or his appointed representative, all information relating to its requirements and regulations and all costs in connection with compliance thereto.

11. EXCAVATIONS

Before excavation for footings adjacent to tracks and/or within the Railroad's right-of-way may commence, whether or not also within the limits of a public highway, plans and calculations for such excavations, prepared by a Professional Engineer authorized to practice in Maine, shall be submitted to the Railroad's Chief Engineer for review and approval. Unless other prior arrangements have been made, the Railroad's Chief Engineer shall have **two (2)** week(s) to perform such review and approval and issue a written permission to proceed with the excavation. No excavation shall proceed without such permission.

At a minimum, excavations must utilize proper bracing, shoring, sheeting or other support as determined by the Railroad's Chief Engineer, to support the tracks with railroad traffic. Open excavation shall be suitably planked over when construction operations are not in progress, the location of any wires, conduits, pipes, cables or other railroad facilities below the surface of the ground. Damage to any such facilities caused by the failure of the Contractor to ascertain the location of such facilities or by failure to use due care to avoid injury to such facilities shall be at the expense of the Contractor.

12. EQUIPMENT

Equipment of the Contractor shall be in such condition so as to prevent failure that would cause delay in the operation of trains or damage to railroad facilities. Equipment shall not be placed or put in operation adjacent to a track without first obtaining permission of the Railroad. The Railroad agrees that such permission shall not be unreasonably withheld.

13. RAILROAD SERVICES - GENERALLY

When work is to be performed within the Railroad's right-of-way, the Railroad shall provide the services, equipment and materials provided in this Special Provision including, but not limited to, engineering, flagging, inspection, signal protection and/or relocation, and restoration or replacement of the Railroad's track structure of ballast. Further, if the Railroad's Chief Engineer determines that the Contractor's operations do not comply with all of the safety requirements of this Special Provision and all safety requirements and directions of said Chief Engineer, the Railroad will employ the necessary qualified employees to protect its trains and other facilities. The Contractor shall pay to the Railroad the cost for performing all Railroad Services unless said costs are to be paid by the Department as specified in this Special Provision.

14. INSPECTION / FLAGGING

The Railroad shall furnish and assign all inspectors / flaggers for general inspection purposes of general protection of railroad property and operations during construction as the Railroad's Chief Engineer determines are necessary to preserve safety.

(a) Responsibility for Cost. The Department will bear the cost of flagging or inspection (including travel time) or any combination thereof up to **500** man days of said flagging or inspection. If, in the opinion of the Railroad's Chief Engineer, further services of a flagger or inspector will be required due to the operations of the Contractor, the services will be furnished and the cost thereof (salary, expenses, insurance, taxes and vacation allowance, etc.) shall be paid to the Railroad by the Department, and will be recovered by the Department from the Contractor.

(b) Terms. The minimum hours per day for the Railroad employees engaged in inspection flagging services shall be eight (8) hours. Time at rates for straight time, overtime or for deadheading starts in accordance with established practices in effect in the territory in which the project is located. Information as to these practices should be obtained from the Railroad's Chief Engineer.

The Contractor shall notify the Railroad's Chief Engineer and the Chief Engineer of the Department in writing **fourteen(14)** calendar day(s) before beginning, resuming or suspending work within (**25** feet) of the track, so that an inspector may be provided or removed in accordance with the requirements of this Special Provision. An inspector may be removed upon **three (3)** calendar day(s) notice, but not before the inspector has worked five (5) consecutive days. Failure to give notice of intent to suspend work shall be cause of charge to the Contractor the cost of inspection during the period when work is suspended.

(c) Estimated Cost. The following is an estimate of the cost per day of inspection/flagging necessary for this project. The rates shown include all overhead charges, travel time, deadheading and personal expenses.

Date of estimate **11/16/09.**

Estimated daily rate for **four (4)** consecutive hours Monday-Friday (straight time): **$136.00**

Estimated daily rate for **four (4)** consecutive hours Saturday, Sunday, Holiday (overtime): **$272.00**

Estimated rate for hours worked in excess of eight (8) hours in any one day: **$68.00**
Rates charged will be those in effect at the time of the performing the inspection/ flagging which may be different than the rates used at the date of the Estimate.

(d) Definitions.

Man day (M.D.) - eight (8) consecutive hours or any portion thereof.

Overtime - Each additional hour or fraction thereof consecutive to and beyond the standard man day will count as 3/16 of a man day.

Standard Man day - Eight (8) consecutive hour, Monday - Friday between the hours of **0700** a.m. to **3:30** p.m , minus lunch period, unless otherwise noted and agreed to by all parties. *
*Does not include lunch period from 12:00-12:30pm. Does not include travel time.

Travel Time - Time required by flagger and/or inspector to commute between his or her point of headquarters to the project site. This time shall not be charged used in determining available man days.

15. OTHER CONTRACTOR RESPONSIBILITIES

The restoring and resurfacing of tracks, if disturbed due to Contractor's operations, shall be at the expense of the Contractor.

Any other changes made or services furnished by the Railroad as a result of the Contractor will be at the Contractor's expense.

16. EXTRA-CONTRACT SERVICES

Temporary and permanent changes of tracks and telephone, signal and electric supply lines made necessary by or to clear the permanent work of the Contractor as shown on the construction plans and included in the Railroad force account as recollectable from the State will be made or caused to be made by the Railroad without expense to the Contractor.

17. INDEMNIFICATION

Where work is being performed over, under, across or adjacent to Railroad premises, the Contractor shall defend, indemnify and save harmless the Railroad and the Maine Department of Transportation from and against any and all loss, cost, damage, claims, suits, demands, or liability for damages for personal injury including death and for damage to property, which may arise from or out of the operations conducted under his contract, occurring by reason of any act or omission of the Contractor, his agents, servants or employees, or by reason of any act or omission of any subcontractor, his agents, servants or employees.

18. INSURANCE

In addition to any other forms of insurance or bonds required under the terms of the Contract, the Contractor will be required to procure and maintain, at its sole cost and expense, the following insurance coverages naming the Railroad as an insured.

(a) Railroad Protective Liability Insurance with limits not less than **$2,000,000.00** per single occurrence and **$6,000,000.00** per aggregate total occurrences.

(b) Comprehensive General Liability Insurance protecting against liability from bodily injury or property damage arising out of the Construction Project with limits of not less than **$2,000,000.00** per single occurrence and **$6,000,000.00** per aggregate total occurrences.

(c) Workers Compensation and Occupational Disease Insurance, as required by law.

(d) Automobile Liability Insurance covering all motor vehicles used about or in connection with the Construction Project.

If any part of the work is sublet, these insurance coverages shall be provided by or on behalf of the subcontractors to cover their operations

Each policy shall carry an endorsement covering the "save harmless" clause in favor of the Railroad and the Maine Department of Transportation, as set forth in the paragraph, "Responsibility for Damage Claims".

If blasting is to be done in the vicinity of the Railroad, the insurance policies shall include such coverage.

The policies shall be in force before any work is done on the project and shall remain in effect until all work required to be performed under the terms of the contract is satisfactorily completed as evidenced by the formal acceptance by the State and the Railroad.

Before any work is done on the project, the Department of Transportation and the Railroad's Chief Engineer shall be furnished certificates of each policy. Further, the original policy of the Comprehensive General Liability Insurance and the Railroad Protective Liability Insurance shall be furnished to the Railroad's Chief Engineer and a duplicate shall be furnished to the Department of Transportation.

The policy or policies of the Railroad's protective public liability and property damage liability shall be written by a Company authorized to do business in the State of Maine, and shall be signed by the President and Secretary of the Insurance Company and shall be countersigned by an authorized representative of the Company.

19. **ROADWAY WORKER SAFETY REGULATION**

Notice to all Contractors/Subcontractors and individuals must be aware of the Federal Roadway Worker Safety Regulation, CFR 49, Part 214(c). They may be required to comply with this regulation. Any requirements for them to comply will be discussed at the pre-construction utility meeting.

Town: **Falmouth**
Project:-**Proj. # BR-1509(400)X**
PIN 15094.00

12/3/09
EXHIBIT A
ORIGINAL TO CONTRACTOR

MDOT/RAILROAD STOP WORK ORDER

Section A - Contractor □	Town□
	DOT Railroad Project #
Railroad Name	Location□
	Notice #□
DESCRIPTION OF SAFETY HAZARD/REASON FOR ORDER □	
Standard Violated □	RAC (Risk Assessment Code) **N/R**
Railroad Official (Flagger/Inspector) Name Signature	Date
□	
SECTION B - ACTION TAKEN: □	

cc: MDOT – R. E. or Inspector
MDOT – Utility Coordinator
MDOT- Project Manager
MDOT- Coy Williams, Bridge Program
Railroad –Chief Engineer

12/3/09

1. Risk Assessment. Each identified/validated hazard shall be assigned a Risk Assessment Code (RAC) by the Safety Office. The RAC represents the degree of risk associated with the deficiency and combines the elements of hazard severity and mishap probability. The RAC is derived as follows:

a. Hazard Severity. The hazard severity is an assessment of the worst potential consequence: Defined by degree of injury, occupational illness, or property damage, which is likely to occur as a result of a deficiency. Hazard severity categories shall be assigned by roman numeral according to the following criteria.

(1) Category I - Catastrophic: The hazard may cause death or loss of a facility.

(2) Category II - Critical: May cause severe injury, severe occupational illness, or major property damage.

(3) Category III - Marginal: May cause minor injury, minor occupational illness, or minor property damage.

(4) Category IV - Negligible: Probably would not affect personnel safety or health, but is nevertheless in violation of a NAVOSH standard.

b. Mishap Probability. The mishap probability is the probability that a hazard will result in a mishap, based on an assessment of such factors as location, exposure in terms of cycles or hours of operation, and affected population. Mishap probability shall be assigned an Arabic letter according to the following criteria:

(1) Sub-category A - Likely to occur immediately or within a short period of time.

(2) Sub-category B - Probably will occur in time.

(3) Sub-category C - May occur in time.

(4) Sub-category D - Unlikely to occur.

c. Risk Assessment Code. The RAC is an expression of risk which combines the elements of hazard severity and mishap probability. Using the matrix shown below, the RAC is expressed as a single Arabic number that can be used to help determine hazard abatement priorities.

	Mishap Probability					RAC
		A	B	C	D	1 - Critical
Hazard Severity	I	1	1	2	3	2 - Serious
	II	1	2	3	4	3 - Moderate
	III	2	3	4	5	4 - Minor
	IV	3	4	5	5	5 - Negligible

Town: Falmouth
Project: # BR-1509(400)X
PIN: 15094.00
Date: November 19, 2009

SPECIAL PROVISIONS
SECTION 104
Utilities

MEETING
A Preconstruction Utility Conference, as defined in Subsection 104.4.6 of the Standard Specifications is thereby called for.

GENERAL INFORMATION
These Special Provisions outline the arrangements that have been made by the Department for coordination of the work and for utility and/or railroad adjustments as defined in Subsection 104.4.6 and 104.4.8 of the Standard Specifications. The following list identifies all known utilities or railroads having facilities presently located within the limits of this project or intending to install facilities during project construction, unless otherwise provided.

Overview

Utility/Railroad	Aerial	Underground	Railroad
Central Maine Power Company	X	None	None
Fairpoint Communications	X	None	None
Time Warner Cable	X	None	None
Portland Water District	None	X	None
Portland Terminal Railroad Co.	None	None	X

Temporary utility adjustments are not contemplated unless herein provided for.

The approximate locations of major items of existing and proposed (permanent and temporary) utility plant are shown on the highway construction plans.

All utility crossings over highways will provide not less than 20 feet vertical clearance over existing ground in cut or over finished grade in fill, during construction of this project.

Manholes, valve boxes, service connections, and similar incidental utility plant are to be adjusted in cooperation with work being done by the Contractor.

Unless otherwise provided, utilities will not be required to make underground installations in frozen ground.

Any times and dates mentioned are estimates only and are dependent upon favorable weather, working conditions, and freedom from emergencies. The Contractors shall have no claim against the Department if they are exceeded.

Utility working days are Monday through Friday, conditions permitting. Times are estimated on the basis of a single crew for each utility.

In all cases, the utilities shall be advised well in advance (generally three weeks) before work, dependent upon other work to be done by the Contractor, in any particular area, is to be commenced by them.

Unless otherwise specified, any underground utility facilities shown on the project plans represent approximate locations gathered from available information. The Department cannot certify the level of accuracy of this data. Underground facilities indicated on the topographic sheets (plan views) have been collected from historical records and/or on-site designations provided by the respective utility companies. Underground facilities indicated on the cross-sections have been carried over from the plan view data and may also include further approximations of the elevations (depths) based upon straight-line interpolation from the nearest manholes, gate valves, or test pits.

All clearing and tree removal which is a part of this contract in areas where utilities are involved must be completed by the Contractor before the utilities can relocate their facilities. The Contractor shall be prepared to clear trees up to the Right of Way line in the vicinity of proposed new poles and utility lines. No clearing shall begin until after the preconstruction utility meeting. Also see General Construction Note #6 in regards to clearing.

AERIAL

Central Maine Power Company plans to install 5 new poles (3 on Portland approach and 2 on the Falmouth approach). On the Portland approach they plan to transfer conductors to the new poles. On the Falmouth approach they plan to run new conductors on the new poles. Their estimated time is as follows:

1. Installation of new poles: 3 working days.
2. Transfer conductors to new poles: 5 working days.
3. Run new conductors on new poles: 3 working days.
4. Removal of old poles: 2 working days.

Total estimated time is 13 working days.

Time Warner Cable plans to run new cable on the new poles. Their estimated time is as follows:

1. Run new cable on new poles: 3 working days.
2. Removal of old cable: 1 working day.

Total estimated time is 4 working days.

Fairpoint Communications (Northern New England Telephone Operations LLC) plans to install 4 new poles, run new cable on the new pole and new conduit system and removal of old poles and cable. Their estimated time is as follows:

1. Installation of new poles: 2 working days.
2. Run new cable including the conduit and splicing: 8 working days.
3. Removal of the old poles and cable: 1 working day.

Total estimated time is 11 working days.

New Pole Locations
Central Maine Power Company

Station	Offset	Remarks
104+32	27' Left	
105+86	33' Right	
107+68	25' Right	
121+95	45' Right	
122+60	42' Right	

Town: Falmouth
Project: # BR-1509(400)X
PIN: 15094.00
Date: November 19, 2009

Fairpoint Communications

Station	Offset	Remarks
109+10	26' Right	
110+32	23' Left	
118+88	25' Left	
120+40	33'Left	

UNDERGROUND

Fairpoint Communications plans to install their new conduit formation from Station 110+32 to Station 111+10 on the Left and from Station 118+70 to Station 118+88 Left. They would pick up the new bridge conduit approximately 5 feet outside of the new bridge approach slab. Their estimated time is 4 working days.

The new telephone conduit system which is to be installed on the new bridge is to be included in the Department's bridge contract. The Company reserves the right to remove this work from the Department's contract if the Contractor's bid price exceeds their estimated price by 15% or more. If they removed their work from the Department's contract their estimated time is 30 working days.

Portland Water District has included their water main work in the Department's contract.

RAILROAD

Portland Terminal Railroad Company plans to do the following work:

1. Flagging and inspection; estimated time is 500 man days.
2. Removal of the aerial signal line.
3. If the existing railroad ballast is contaminated the Railroad shall replace it at the Contractor cost.

CONTRACTOR

The Railroad will allow a temporary at grade construction crossing of their tracks. This temporary construction crossing in regards to location installation and material make up is negotiable with the Railroad. This temporary at grade construction crossing shall be secured after working hours as not to allow any unauthorized vehicles to use. The only vehicles authorized to use this crossing are railroad vehicles, contractor's equipment/vehicles, material suppliers, utility company vehicles, and MaineDOT employee vehicles which are assigned to this project during working hours.

It shall be the responsibility of the contractor to protect the existing track structure including ballast from demolition debris. The method of protection will have to be approved by the Railroad and MaineDOT. The Railroad requires ten (10) working days for approval.

For further information and/or details on what is required within the area around or adjacent to the railroad, please see the "Protection of Railroad and Traffic Structure Special Provisions".

UTILITY SPECIFIC ISSUES

Any tree removal or tree trimming required within ten feet of the electrical conductors must be done by a qualified contractor. A list if tree removal contractors qualified to remove trees or limbs within ten feet of the electrical conductors may be obtained from the power company.

DIG SAFE

The Contractor shall be responsible for determining the presence of underground utility facilities prior to commencing any excavating work and shall notify utilities of proposed excavation in accordance with M.R.S.A. Title 23 §3360-A, Maine "Dig Safe" System.

SAFE PRACTICES AROUND UTILITY FACILITIES

The Contractor shall be responsible for complying with M.R.S.A. Title 35-A, Chapter 7-A - Sections 751 - 761 Overhead High-Voltage Line Safety Act. Prior to commencing any work that may come within ten (10) feet of any aerial electrical line, the Contractor shall notify the aerial utilities as per Section 757 of the above act.

BLASTING

In addition to any other notice which may be required, the Contractor shall notify an authorized representative of each utility having plant close to the site not later than 3:00 P.M. on the working day (Monday through Friday) before he intends to blast. Notice shall state the approximate time of the blast.

THE CONTRACTOR SHALL PLAN AND CONDUCT HIS WORK ACCORDINGLY.

jq

CC: Nate Benoit, Project Manager

SPECIAL PROVISION
SECTION 105
LEGAL RELATIONS WITH AND RESPONSIBILITY TO PUBLIC
(NPDES)

105.8.2 Permit Requirements This Section is revised by the addition of the following paragraph:

"The Contractor is advised that the Environmental Protection Agency has issued a final National Pollutant Discharge Elimination System (NPDES) General Permit for storm water discharges from construction sites disturbing more than 2 ha [5 acres]. This permit requires:

- Storm Water Pollution Prevention Plan
- Submission of a Notification of Intent (NOI) at least 48 hours before construction commences
- Submission of a Notification of Termination (NOT) when a site has been finally stabilized and all storm water discharges from construction activities are eliminated.

If the project's land disturbances is 2 ha [5 acres] or more, the Department will prepare the plan and submit the NOI (and NOT). The Contractor shall prepare plans and submit NOI's (and NOT's) for regulated construction activities beyond the project limits (e.g., borrow pits).

The Contractor shall be familiar with and comply with these regulations."

Town: Falmouth
PIN #: 15094.00
Date: 12/7/09

SPECIAL PROVISION
SECTION 105
General Scope of Work
(Environmental Requirements)

In-Water work consists of any activity conducted below the normal high water mark of a river, steam, brook, lake, pond or "Coastal Wetland" areas that are subject to tidal action during the highest tide level for the year which an activity is proposed as identified in the tide tables published by the National Ocean Service. http://www.oceanservice.noaa.gov/ For the full definition of "Coastal Wetlands", please refer to 38 MRSA 480-B(2)

I. In-Water Work shall not be allowed between the dates of 5/1 and 7/31.
(In-Water work is allowed from 8/1 to 4/31.)

II. In-Water work window applies to the following water bodies at the following station #'s:

1. Presumpscot River 112+00 through 114+50

III. Special Conditions:

1. Must follow terms and conditions of the Army Corps of Engineers and the Maine Department of Environmental Protection Permits for this project, including any modifications.

IV. Approvals:

1. Temporary Soil Erosion and Water Pollution Control Plan

V. All activities are prohibited (including placement and removal of cofferdams unless otherwise permitted by Regulatory Agencies) below the normal high water mark if outside the prescribed in-water work window, except for the following:

1. Work within a cofferdam constructed according to MaineDOT's Standard Specifications and in adherence with the contractors approved "Soil Erosion and Water Pollution Control Plan".

VI. No work is allowed that completely blocks a river, stream, or brook without providing downstream flow.

NOTE: Regulatory Review and Approval is required to modify the existing In-Water work window.

SPECIAL PROVISION 105
OVERLIMIT PERMITS

Title 29-A § 2382 MRSA Overlimit Movement Permits.

1. Overlimit movement permits issued by State. The Secretary of State, acting under guidelines and advice of the Commissioner of Transportation, may grant permits to move nondivisible objects having a length, width, height or weight greater than specified in this Title over a way or bridge maintained by the Department of Transportation

2. Permit fee. The Secretary of State, with the advice of the Commissioner of Transportation, may set the fee for single trip permits, at not less than $6, nor more than $30, based on weight, height, length and width. The Secretary of State may, by rule, implement fees that have been set by the Commissioner of Transportation for multiple trip, long-term overweight movement permits. Rules established pursuant to this section are routine technical rules pursuant to Title 5, chapter 375, subchapter II-A.

3. County and municipal permits. A county commissioner or municipal officer may grant a permit, for a reasonable fee, for travel over a way or bridge maintained by that county or municipality

4. Permits for weight. A vehicle granted a permit for excess weight must first be registered for the maximum gross vehicle weight allowed for that vehicle.

5. Special mobile equipment. The Secretary of State may grant a permit, for no more than one year, to move pneumatic-tire equipment under its own power, including Class A and Class B special mobile equipment, over ways and bridges maintained by the Department of Transportation. The fee for that permit is $15 for each 30-day period.

6. Scope of permit. A permit is limited to the particular vehicle or object to be moved, the trailer or semitrailer hauling the overlimit object and particular ways and bridges.

7. Construction permits. A permit for a stated period of time may be issued for loads and equipment employed on public way construction projects, United States Government projects or construction of private ways, when within construction areas established by the Department of Transportation. The permit:

A. Must be procured from the municipal officers for a construction area within that municipality;

B. May require the contractor to be responsible for damage to ways used in the construction areas and may provide for:

(1) Withholding by the agency contracting the work of final payment under contract; or

(2) The furnishing of a bond by the contractor to guarantee suitable repair or payment of damages.

The suitability of repairs or the amount of damage is to be determined by the Department of Transportation on state-maintained ways and bridges, otherwise by the municipal officers;

C. May be granted by the Department of Transportation or by the state engineer in charge of the construction contract; and

D. For construction areas, carries no fee and does not come within the scope of this section.

8. Gross vehicle weight permits. The following may grant permits to operate a vehicle having a gross vehicle weight exceeding the prescribed limit:

A. The Secretary of State, with the consent of the Department of Transportation, for state and state aid highways and bridges within city or compact village limits;

B. Municipal officers, for all other ways and bridges within that city and compact village limits; and

C. The county commissioners, for county roads and bridges located in unorganized territory.

9. Pilot vehicles. The following restrictions apply to pilot vehicles.

A. Pilot vehicles required by a permit must be equipped with warning lights and signs as required by the Secretary of State with the advice of the Department of Transportation.

B. Warning lights may be operated and lettering on the signs may be visible on a pilot vehicle only while it is escorting a vehicle with a permit on a public way.

With the advice of the Commissioner of Transportation and the Chief of the State Police, the Secretary of State shall establish rules for the operation of pilot vehicles.

9-A. Police escort. A person may not operate a single vehicle or a combination of vehicles of 125 feet or more in length or 16 feet or more in width on a public way unless the vehicle or combination of vehicles is accompanied by a police escort. The Secretary of State, with the advice of the Commissioner of Transportation, may require a police escort for vehicles of lesser dimensions.

A. The Bureau of State Police shall establish a fee for state police escorts to defray the costs of providing a police escort. A county sheriff or municipal police department may establish a fee to defray the costs of providing police escorts.

B. The Bureau of State Police shall provide a police escort if a request is made by a permittee. A county sheriff or municipal police department may refuse a permittee's request for a police escort.

C. A vehicle or combination of vehicles for which a police escort is required must be accompanied by a state police escort when operating on the interstate highway system.

10. Taxes paid. A permit for a mobile home may not be granted unless the applicant provides reasonable assurance that all property taxes, sewage disposal charges and drain and sewer assessments applicable to the mobile home, including those for the current tax year, have been paid or that the mobile home is exempt from those taxes. A municipality may waive the requirement that those taxes be paid before the issuance of a permit if the mobile home is to be moved from one location in the municipality to another location in the same municipality for purposes not related to the sale of the mobile home.

11. Violation. A person who moves an object over the public way in violation of this section commits a traffic infraction.

Section History:
PL 1993, Ch. 683, §A2 (NEW).
PL 1993, Ch. 683, §B5 (AFF).
PL 1997, Ch. 144, §1,2 (AMD).
PL 1999, Ch. 117, §2 (AMD).
PL 1999, Ch. 125, §1 (AMD).
PL 1999, Ch. 580, §13 (AMD).
PL 2001, Ch. 671, §30 (AMD).
PL 2003, Ch. 166, §13 (AMD).
PL 2003, Ch. 452, §Q73,74 (AMD).
PL 2003, Ch. 452, §X2 (AFF).

SPECIAL PROVISION 105
CONSTRUCTION AREA

A Construction Area located in the **Town of Falmouth** has been established by the Maine Department of Transportation (MDOT) in accordance with provisions of 29-A § 2382 Maine Revised Statutes Annotated (MRSA).

(a) The section of highway under construction in the town of Falmouth, Cumberland County on route 100/26. Railroad Crossing Bridge is located on route 100/26 approximately 0.1 mile south of Turnpike ramp number 10.

(b) (Route 100/26) over Maine Central Railroad & Presumpscot river station 105+00 to station 124+50 of the construction plus approaches.

Per 29-A § 2382 (7) MRSA, the MDOT may "*issue permits for stated periods of time for loads and equipment employed on public way construction projects, United States Government projects or construction of private ways, when within construction areas established by the Department of Transportation. The permit:*

A. Must be procured from the municipal officers for a construction area within that municipality;

B. May require the contractor to be responsible for damage to ways used in the construction areas and may provide for:

(1) Withholding by the agency contracting the work of final payment under contract; or

(2) The furnishing of a bond by the contractor to guarantee suitable repair or payment of damages.

The suitability of repairs or the amount of damage is to be determined by the Department of Transportation on state-maintained ways and bridges, otherwise by the municipal officers;

C. May be granted by the Department of Transportation or by the state engineer in charge of the construction contract; and

D. For construction areas, carries no fee and does not come within the scope of this section."

The Municipal Officers for the **Town of Falmouth** agreed that an Overlimit Permit will be issued to the Contractor for the purpose of using loads and equipment on municipal ways in excess of the limits as specified in 29-A MRSA, on the municipal ways as described in the "Construction Area".

As noted above, a bond may be required by the municipality, the exact amount of said bond to be determined prior to use of any municipal way. The MDOT will assist in determining the bond amount if requested by the municipality.

The maximum speed limits for trucks on any town way will be 25 mph (40 km per hour) unless a higher legal limit is specifically agreed upon in writing by the Municipal Officers concerned.

SPECIAL PROVISION
SECTION 106
QUALITY
(Quality Level Analysis- Structural Concrete)

106.7.1 Standard Deviation Method Under H. Replace the Method A payfactor with the following;

"Method A: PF = [32.5 + (Quality Level * 0.75)] * 0.01"

SPECIAL PROVISION
SECTION 107
PROSECUTION AND PROGRESS
(Contract Time)

The specified contract completion date is June 1, 2012.

SPECIAL PROVISION
SECTION 107
TIME
(Bridge Closure, Limitation of Operations, & Supplemental Liquidated Damages)

The Contractor shall plan and conduct his operations in such a manner that the new Railroad Crossing Bridge is complete and open to two-way traffic by October 15th, 2011. A completed bridge shall have membrane, pavement, and bridge rail installed.

Shall the new Railroad Crossing Bridge not be complete and open to traffic on or before October 15th, 2011 the Contractor shall be assessed supplemental liquidated damages at the rate of Five Hundred Dollars ($500.00) per day. This assessment of supplemental liquidated damages will be in addition to the liquidated damages specified in Section 107 of the Standard Specifications.

If the Contractor exceeds the thirty-six (36) day limit allowed for one-lane-closures as described in Special Provision 652 Maintenance of Traffic, the Contractor shall be assessed supplemental liquidated damages at the rate of Five Hundred Dollars ($500.00) per day.

If the Contractor doesn't reopen a closed lane as allowed by Special Provision 652 Maintenance of Traffic, the Contractor shall be assessed supplemental liquidated damages at the rate of One Hundred Dollars ($100) per 15 minutes up to a maximum rate of One-Thousand Dollars ($1000) per day.

Once the Contractor commences work on this project the work shall be continuous through completion unless the work stoppage is allowed by the Resident.

SPECIAL PROVISION
SECTION 107
TIME
(Supplemental Liquidated Damages for Fabrication Time)

107.8.1 Fabrication Time.

The Department has budgeted for the following amounts of continuous full time fabrication/shop inspection for certain Work components:

Element	Time	Supplemental LD
1) Precast Structural Concrete Panel Wall	30 Calendar days	$500 per calendar day
2) Structural Steel	160 calendar days	$500 per calendar day

The Contractor is responsible for requiring their fabricators and suppliers to produce these products for the Work continuously until finished, including any needed actions to correct unacceptable workmanship or materials. If the Department determines that shop inspection beyond these times is required, then the corresponding Supplemental Liquidated Damages will be deducted as they occur from amounts otherwise due the Contractor. The Contractor will be notified by the Department when these times begin and when the allotted time will expire.

If a fabricator or supplier works more than one shift per day and the Department determines that inspection is required for each shift, each shift will count as a calendar day and the LD rate will be the noted amount per shift per calendar day in lieu of per calendar day.

Inspection is required for the following activities:
For metal fabrication work - welding, including tack welding, heat correcting, non-destructive examination, assembly verification, protective coating application.

For concrete work – tensioning of strands, batching and casting of concrete, breaking of test cylinders, de-tensioning.

SPECIAL PROVISION
SECTION 107
TIME
(Scheduling of Work – Projected Payment Schedule)

Description The Contractor shall also provide the Department with a Quarterly Projected Payment Schedule that estimates the value of the Work as scheduled, including requests for payment of Delivered Materials. The Projected Payment Schedule must be in accordance with the Contractor's Schedule of Work and prices submitted by the Contractor's Bid. The Contractor shall submit the Projected Payment Schedule as a condition of Award.

SPECIAL PROVISION
SECTION 107
SCHEDULING OF WORK

Replace Section 107.4.2 with the following:

"107.4.2 Schedule of Work Required Within 21 Days of Contract Execution and before beginning any on-site activities, the Contractor shall provide the Department with its Schedule of Work. The Contractor shall plan the Work, including the activity of Subcontractors, vendors, and suppliers, such that all Work will be performed in Substantial Conformity with its Schedule of Work. The Schedule must include sufficient time for the Department to perform its functions as indicated in this Contract, including QA inspection and testing, approval of the Contractor's TCP, SEWPCP and QCP, and review of Working Drawings.

At a minimum, the Schedule of Work shall include a bar chart which shows the major Work activities, milestones, durations, and a timeline. Milestones to be included in the schedule include: (A) start of Work, (B) beginning and ending of planned Work suspensions, (C) Completion of Physical Work, and (D) Completion. If the Contractor Plans to Complete the Work before the specified Completion date, the Schedule shall so indicate.

Any restrictions that affect the Schedule of Work such as paving restrictions or In-Stream Work windows must be charted with the related activities to demonstrate that the Schedule of Work complies with the Contract.

The Department will review the Schedule of Work and provide comments to the Contractor within 20 days of receipt of the schedule. The Contractor will make the requested changes to the schedule and issue the finalized version to the Department."

SPECIAL PROVISION
SECTION 108
PAYMENT
(Asphalt Escalator)

108.4.1 Price Adjustment for Hot Mix Asphalt: For all contracts with hot mix asphalt in excess of 500 tons total, a price adjustment for performance graded binder will be made for the following pay items:

Item 403.206 Hot Mix Asphalt - 25 mm
Item 403.207 Hot Mix Asphalt - 19 mm
Item 403.208 Hot Mix Asphalt - 12.5 mm
Item 403.2081 Hot Mix Asphalt - 12.5 mm (PG 70-28)
Item 403.209 Hot Mix Asphalt - 9.5 mm (sidewalks, drives, & incidentals)
Item 403.210 Hot Mix Asphalt - 9.5 mm
Item 403.2102 Hot Mix Asphalt - 9.5 mm
Item 403.211 Hot Mix Asphalt - Shim
Item 403.212 Hot Mix Asphalt - 4.75 mm
Item 403.213 Hot Mix Asphalt - 12.5 mm (base and intermediate course)
Item 403.2131 Hot Mix Asphalt - 12.5 mm (base and intermediate course PG 70-28)
Item 403.2132 Hot Mix Asphalt - 12.5 mm (Asphalt Rich Base and intermediate course)
Item 461.13 Maintenance Surface Treatment

Price adjustments will be based on the variance in costs for the performance graded binder component of hot mix asphalt. They will be determined as follows:

The quantity of hot mix asphalt for each pay item will be multiplied by the performance graded binder percentages given in the table below times the difference in price between the base price and the period price of asphalt cement. Adjustments will be made upward or downward, as prices increase or decrease.

Item 403.206:	4.8%	Item 403.2102:	6.2%
Item 403.207:	5.2%	Item 403.211:	6.2%
Item 403.208:	5.6%	Item 403.212:	6.8%
Item 403.2081:	5.6%	Item 403.213:	5.6%
Item 403.209:	6.2%	Item 403.2131:	5.6%
Item 403.210:	6.2%	Item 403.2132:	5.6%
Item 461.13:	6.4%		

Hot Mix Asphalt**:** The quantity of hot mix asphalt will be determined from the quantity shown on the progress estimate for each pay period.

Base Price: The base price of performance graded binder to be used is the price per standard ton current with the bid opening date. This price is determined by using the average New England Selling Price, as listed in the Asphalt Weekly Monitor.

Period Price: The period price of performance graded binder will be determined by the Department by using the average New England Selling Price, listed in the Asphalt Weekly Monitor current with the paving date. The maximum Period Price for paving after the adjusted Contract Completion Date will be the Period Price on the adjusted Contract Completion Date.

Falmouth
Pin: 15094.00
December 2, 2009

SPECIAL PROVISION
SECTION 109.5
ADJUSTMENTS FOR DELAY
(Delays due to Flooding)

Subsection 109.5.1, Definitions- Types of Delays, is replaced with the following:

109.5.1 Definitions - Types of Delays Delays are defined as follows and may be divided into more than one type depending upon cause.

A. Excusable Delay Except as expressly provided otherwise by this Contract, an "Excusable Delay" is a Delay to the Critical Path that is directly and solely caused by: (1) an Uncontrollable Event, or (2) a flooding event at the effected location of the Project that results in a theoretical Q25 headwater elevation of 26.6 feet, or greater, but less than a theoretical Q50 headwater elevation of 27.6 feet. The actual headwater elevations in the field will be determined by the Contractor and verified by the Department.

B. Compensable Delay A "Compensable Delay" is a Delay to the Critical Path that is directly and solely caused by: (1) a weather related Uncontrollable Event of such an unusually severe nature that a Federal Emergency Disaster is declared. The Contractor will only be entitled to an Equitable Adjustment if the Project falls within the geographic boundaries prescribed under the disaster declaration (2) an Uncontrollable Event caused by a Utility Company or other third party (not Subcontractors) Working on Project-related Work within the Project Limits if, and only if, the Utility Company or such other third party offers the Department reimbursement for such Delay (3) acts by the Department that are in violation of applicable laws or the Contract, or (4) a flooding event at the effected location of the Project that results in a theoretical Q50 headwater elevation of 27.6 feet, or greater. The actual headwater elevation in the field will be determined by the Contractor and verified by the Department.

C. Inexcusable Delay "Inexcusable Delays" are all Delays that are not Excusable Delays or Compensable Delays.

For a related provision, see Section 101.2 - Definition of Uncontrollable Event.

SPECIAL PROVISION
SECTION 202
REMOVAL OF STRUCTURES AND OBSTRUCTIONS

Under Section 202.02 of the Standard Specifications, ownership of buildings and all equipment, fixtures, and materials therein shall be interpreted as meaning all equipment, fixtures, and materials that are recognized as real property. Any items that are recognized as personal property are excepted and are reserved to the owner. If the bidder is in doubt as to whether any item not listed is real or personal property, they shall request a determination of the matter prior to date on which bids are to be received.

The following list of items is to be reserved to the property owners and/or occupants of Buildings No.1:
No Reservations

Buildings to be removed under Section 202 - Removing Structures and Obstructions of the contract will be made available to the Contractor as follows:

Within ten (10) days of receipt of a fully executed Contract.

Failure by the Maine State Department of Transportation to meet dates of availability may entitle the Contractor to time extension if requested by the Contractor, in writing, such request indicating delays in construction, if any, caused by changes in availability dates.

With the "Notice to Proceed", or when a building becomes available to the Contractor, the Department will designate whether rodent control measures are required or not.

The Contractor shall not remove a building until the Contractor has certified it to be free of rodents. Should rodent control measures be required, the Contractor shall procure the extermination services as soon as possible. The cost of extermination services until the building is found to be rodent free will be paid for under Section 109.3 – Extra Work.

This building may or may not contain asbestos. Prior to any demolition of building(s) the Contractor will conduct an asbestos survey on the building(s) to determine if any asbestos exists. The survey will be conducted by a DEP certified Asbestos Inspector. No separate payment will be made for the survey and it shall be considered incidental. The survey results will be communicated with the Resident. If no asbestos is discovered, the demolition process may proceed. If asbestos is found, the Contractor will employ a DEP certified Asbestos Abatement Contractor for its' removal and disposal. The Department will bear all expenses incurred in the abatement of any asbestos containing material as detailed in Standard Specification 109.7.5 – Force Account. Any questions can be directed to the Office of Legal Service (624-3020).

Each building shall be removed promptly after certification that it is free of rodents. All subsequent inspection costs and extermination services necessary to assure that the building is rodent free at time of removal will be at the expense of the Contractor.

Scope of Work
The work shall consist of the complete Demolition / Removal of the building on 43 Gray Road. The foundation shall be removed to three feet below finished grade. All material, and any associated debris shall be removed from the site and properly disposed of.

Septic System: The septic tank and or lift stations and holding tanks shall be pumped out to remove waste material and shall be broken up as directed by the resident to preclude accumulation of water. It shall be backfilled with material as shown on the plans.

Oil Tanks: All tanks shall be emptied, cleaned and removed in accordance with all Local, State and Federal rules, laws and regulations.

FALMOUTH--15094.00
RAIL ROAD CROSSING BRIDGE--#2702
4 DECEMBER, 2009

SPECIAL PROVISION
SECTION 203
EXCAVATION AND EMBANKMENT
(Riverbed Excavation -- Dredge Material)

Description: Dredge Material (See MaineDOT Standard Specifications § 101.2) is regulated as a Special Waste.

The Dredge Material from the River and Rail Road Crossing Bridge meets the CMR 418 § 5 criteria for Beneficial Use as Construction Fill. The MaineDOT has applied to the MDEP for a Beneficial Use of Dredge Material Permit and it is anticipated that the Permit will be approved. The approximate volume of anticipated dredge is 2500 cubic yards. **If the Permit is received prior to the excavation of the Dredge Material, the Dredge Material will be beneficially used on site. If the Permit is not received prior to the excavation, the Dredge Material will be disposed of as Special Waste.**

CONSTRUCTION REQUIREMENTS

Management: If the Permit is received, the contractor shall use the Dredge Material excavated at the River and Rail Road Crossing Bridge site as Construction Fill in the Routes 26/100 in-slopes in the vicinity of the bridge and to fill in the basement of a demolished building at the site. The Contractor shall ensure that the Dredge Material is placed into the fill area(s) specified by MaineDOT. All Dredge Material shall be completely covered by concrete, asphalt-paved surface or by six (6) inches (150 mm) of a compacted soil material.

If the Permit is not received, the Contractor shall dispose of all Dredge Material from the River and Rail Road Crossing Bridge site at a landfill licensed by the Maine Department of Environmental Protection for the disposal of Special Waste. The Contractor shall be responsible for making all necessary arrangements for dewatering and proper disposal of the Dredge Material, including any additional laboratory testing, in accordance with the landfill's license. The Contractor shall provide documentation to the Resident that the Dredge Material was disposed of as specified. The submitted documentation shall consist of truck manifests, waybills, or such documentation as may be acceptable to the Resident and shall clearly document the disposal site location and the quantity of Dredge Material.

Method of Measurement: Dredge Material will be measured by the cubic yard of material removed.

Basis of Payment: The accepted quantity of Dredge Material Beneficially Used shall be paid for at the contract unit price bid for Structural Earth Excavation. Payment shall

be full compensation for excavation, dewatering, managing, transporting and placement.

Payment will be made under:

Pay Item		Pay Unit
206.061	Structural Earth Excavation	cubic yard

The accepted quantity of Dredge Material properly disposed of, as Special Waste, will be paid for at the contract unit price bid for Disposal of Dredge Material.

Payment shall be full compensation for excavation, dewatering, testing, managing, transporting, disposal or placement, and all associated fees.

Payment will be made under:

Pay Item		Pay Unit
203.231	Disposal of Dredge Material	cubic yard

SPECIAL PROVISION
SECTION 203
EXCAVATION AND EMBANKMENT
(Leveling Sand)

203.01 Description

The following sentence is added:

This work shall include furnishing, placing, grading and compacting leveling sand beneath and above the expanded polystyrene fill (EPS) as shown on the Contract Drawings, or as directed by the Resident.

MATERIALS

203.02 Materials

The following sentence is added:

Leveling sand shall meet the requirements of Subsection 703.05, Aggregate for Sand Leveling.

CONSTRUCTION REQUIREMENTS

203.04 General

The following sentence is added:

A uniform layer of leveling sand shall be placed over the prepared surface and graded to a uniform slope as shown on the Contract Drawings. Compaction shall be achieved with an approved manually-operated power compactor, or as directed by the Resident. Compact Leveling Sand to a minimum of 92 percent of maximum dry density as determined by AASHTO T180, or as approved by the Resident.

203.18 Method of Measurement

The following sentence is added:

Leveling Sand shall be measured by the cubic yard complete and accepted in place.

203.19 Basis of Payment

The following paragraphs are added:

Leveling Sand will be paid for at the Contract unit price per cubic yard which shall be full compensation for all labor, materials, equipment and incidentals necessary to complete the work.

Payment will be made under:

Pay Item		Pay Unit
203.4539	Leveling Sand	Cubic Yard

SPECIAL PROVISION
SECTION 203
EXCAVATION AND EMBANKMENT
(EPS Geofoam Lightweight Fill)

203.01 Description

The following sentence is added:

This work shall consist of furnishing all qualifications, shop drawings, material and equipment, disposal of material, providing approved field quality control personnel to oversee and certify installation, and placing expanded polystyrene (EPS) Geofoam Lightweight Fill, referred to in this Specification as Geofoam, complete, as specified herein, and shown on the reviewed shop drawings, or as directed by the Resident. Provide all labor, materials and equipment necessary to complete the work of this Section.

The following Subsection is added:

203.011 Reference Publications

Some or all of the publications referred to hereinafter form a part of this specification to the extent referenced. The publications are referred to in the text by the basic designation only. The latest edition of the reference publication shall govern:

ASTM Designation	Standard Test Method for
C203-05a	Breaking Load and Flexural Properties of Block-Type Thermal Insulation
C578-09e1	Rigid, Cellular Polystyrene Thermal Insulation
D732-02	Shear Strength of Plastics by Punch Tool
C272-01	Water Absorption of Core Materials for Structural Sandwich Constructions
D1621-04a	Compressive Properties of Rigid Cellular Plastics
D1622-08	Apparent Density of Rigid Cellular Plastics
D1623-03	Tensile and Tensile Adhesion Properties of Rigid Cellular Plastics
D6817-07	Standard Specification for Rigid Cellular Polystyrene Geofoam

MATERIALS

203.02 Materials

The Contractor shall provide Geofoam, mechanical fasteners, shop drawings for installation and fulltime on site supervision of Geofoam installation. The Contractor shall provide the Geofoam Supplier with a copy of this Specification.

All Geofoam materials delivered to the site shall be in accordance with the requirements of this Section.

Geofoam product marking shall meet the minimum requirements of ASTM D6817-07.

The following Subsections are added:

203.021 Contractor and/or Geofoam Supplier Qualifications Submittal

At least thirty working days prior to first delivery of EPS to the site, the Contractor and/or Geofoam Supplier shall submit the following:

- List of at least three successful, similar projects using Geofoam in a load bearing or embankment application.
- Contact reference for each project with telephone number and addresses.
- Resume(s) of construction quality control personnel listing specific EPS experience in load bearing and/or embankment applications. The field quality control personnel shall have a minimum of two (2) years' experience in this work and shall have worked on at least one of the three successful EPS projects listed. Personnel to be assigned to the project must be identified by the Geofoam Supplier and approved by the Department. Alternate personnel may be used only after their qualifications are reviewed and approved by the Department
- Written documentation verifying that the Geofoam Supplier has a third-party certification program in force. If multiple Geofoam Suppliers are used, each Supplier shall have a program in force. If multiple Geofoam Suppliers are used, third-party certification must be acceptable for each and every Supplier; otherwise, it will be denied for each and every molder. The documentation shall identify the business entity providing the third-party certification and shall describe in detail the steps to be taken by the agency to verify the Geofoam Supplier(s) compliance with the specific requirements described herein.
- Detailed description of the manufacturing and construction quality control services to be provided for this project.

A review of the Contractor's and Geofoam Supplier's qualifications will be completed by the Department within ten working days of receipt.

At least ten working days prior to the first delivery of Geofoam to the site, the Contractor shall provide certification, in the form of a letter prepared by the Geofoam Supplier, that the Geofoam will be, or has been, manufactured in accordance with these Specifications and that the specified minimum physical property requirements will be, or have been, met.
No Geofoam shall be shipped to the site until such time as all qualification related submittals have been reviewed and approved by the Department.

Upon completion of the installation, the Contractor shall provide a letter certifying that the Geofoam was manufactured and installed in accordance with the Specifications and approved shop drawings.

203.022 Contractor Shop Drawing and Geofoam Sample Submittal

At least twenty working days prior to first delivery of material to the site, the Contractor shall submit the following:

- Complete, accurate, full-size shop drawings to scale for both EPS fill structures (North and South Approach Embankments) in this Contract. In general, the submitted drawings shall include plans, elevations and cross-sections as needed to clearly show the configuration and limits of the Geofoam structures. Specifically, the drawings shall include the following:

    - The proposed layout and limits of Geofoam based on the plan, section and profile limits and the Geofoam details shown in the Contract Drawings. Layout drawings shall include station/offset information as needed to determine plan limits of each layer of Geofoam in the field.
    - The proposed Geofoam sizes, laying pattern as well as the orientation of blocks with each course and layout of all Geofoam inter-block connections.
    - Geofoam sizes and laying pattern.

- A step by step procedure for and description of the anticipated installation and construction sequence of the Geofoam structures (North and South Approach Embankments) in this Contract. The procedure and description shall include the use of temporary shoring and temporary ballasting/stabilizing required to prevent movement during construction prior to placement of the concrete load distribution slab.
- A minimum of three full-size Geofoam blocks for each geofoam type to be used on the project shall be shipped/delivered to a location specified by the Department. If multiple Geofoam Suppliers are used, there shall be three blocks from each Supplier. The blocks shall in all respects be the same as blocks to be used on the project, including required seasoning. The Department will weigh, measure, sample, and test a random number of blocks to evaluate the ability of the Geofoam Supplier(s) to produce Geofoam of quality as specified herein.

A review of the shop drawings or revised shop drawings will be completed by the Department within ten working days of receipt. If revisions are required, the Contractor and/or Geofoam Supplier shall submit the revised shop drawings for review. Geofoam shall not be shipped to the site prior to notification from the

Department that the shop drawings have been reviewed and all outstanding submittal comments have been addressed.

203.023 Geofoam Lightweight Fill

Geofoam shall be material designation EPS29 per ASTM D6817-07 conforming to this Specification, as supplied by:

Branch River Plastics, Inc. 15 Thurber Boulevard Smithfield, Rhode Island 02917 Tel: 1-401-232-0270 Fax: 1-401-231-3434	Insulation Technology, Inc. 35 First Street, P.O. Box 578 Bridgewater, Massachusetts 02324 Tel: 1-508-697-6926 Fax: 1-508-697-6934	Thermal Forms, Inc. 6173 South Bay Rd., P.O. Box 1981 Cicero, New York 13039 Tel: 1-315-699-8734 Fax: 1-315-699-4969

or approved equal.

Geofoam shall be fabricated using virgin feedstock manufactured into blocks having no more than five percent regrind content. If regrind is to be used, its use shall be clearly stated by the Geofoam Supplier. The source of the regrind (block-molded versus shape-molded, in-plant versus post-consumer) shall also be stated clearly.

All Geofoam shall be adequately seasoned prior to shipment to the project site. Seasoning is defined as storage in an area suitable for the intended purpose as subsequently defined herein for a minimum of 72 hours at normal ambient room temperature after the Geofoam is released from the mold. Seasoning shall be done within a building or other structure that protects the Geofoam from moisture as well as ultraviolet (UV) radiation. The area in which Geofoam is stored for seasoning shall also be such that adequate space is allowed between blocks and such that positive air circulation and venting of the structure are provided so as to foster the outgassing of blowing agent and trapped condensate from within the blocks. The Department shall be allowed to inspect the manufacturing facility including the structure(s) to be used for seasoning upon request, during normal business days and hours, including prior to the start of the project. The Geofoam Supplier may request a shortened seasoning period if the Geofoam is seasoned within an appropriate heated storage space and the Geofoam Supplier demonstrates to the satisfaction of the Department that the alternative seasoning treatment produces Geofoam that equal or exceed the quality of Geofoam subjected to the normal 72-hour seasoning period.

Geofoam shall conform to EPS29 as specified by ASTM D 6817. Only this material designation shall be used in any correspondence or other communication related to this project. Geofoam specified herein shall have the following minimum allowable physical properties:

Physical Property	ASTM Test Procedure	Accepted Value ASTM EPS29
Density	D1622-08	1.8 pounds per cubic foot (pcf) minimum
Compressive Strength	D1621-04a	29 pounds per square inch. (psi) minimum at yield or 10% deformation
Compressive Strength	D1621-04a	10.9 psi, minimum, at 1% deformation
Flexural Strength	C203-05a	50 psi minimum
Water Absorption	C272-01	Less than 2 percent by volume

The Geofoam material properties are to be obtained by testing specimens prepared from samples taken from actual Geofoam blocks produced for the project, after the period of seasoning, as defined herein.

Geofoam blocks shall have a height of at least 2 ft, a width of at least 4 ft, and a length of at least 8 ft. Other Geofoam block sizes could be used as approved by the Department. All blocks shall be shop-trimmed as necessary so that all surfaces are smooth and flat. The dimensions of each block shall not deviate from the theoretical dimensions by more than 0.5 percent. The corner or edge formed by any two faces of a block shall be perpendicular, i.e., forms an angle of 90 degrees. The deviation of any face of the block from a theoretical perpendicular plane shall not exceed 0.12 in. over a distance of 20 in. Any one face of a block shall not deviate from planarity by more than 0.2 in. when measured using a straightedge with a length of 9.8 ft. Additional field and/or shop-trimming and cutting may be required as necessitated by the geometry of the Geofoam fill being constructed.

The Geofoam shall contain a flame retardant additive and shall have UL Certification of Classification as to External Fire Expose and Surface Burning Characteristics so as to comply with Oxygen Index requirements of ASTM C578-09e1. Geofoam should be considered combustible and shall not be exposed to open flame or any source of ignition. Geofoam shall be treated to prevent insect attack and shall be protected from burrowing animals. The Geofoam Supplier shall present proposed treatment methods to the Resident for review and approval prior to the first shipment of Geofoam to the site.

Connectors shall be galvanized 20 gage, minimum, steel multi-barbed connectors. Each connector shall be capable of penetrating the Geofoam up to ¾ inch, minimum, and have a lateral holding strength of at least 60 lbs. when tested with ASTM D6817 (EPS29), with a safety factor of two.

CONSTRUCTION REQUIREMENTS

203.04 General

The following paragraphs are added:

Prior to delivery of any Geofoam to the project site, a meeting shall be held between, at a minimum, the Department, Contractor, and Geofoam Supplier(s). The purpose of this meeting shall be to review Contractor and Geofoam Supplier(s) submittals, the results of the testing specified in Section 203.022 as well as the manufacturing and construction quality control and quality assurance requirements shown on the attached Table I, to ensure that all parties are familiar with the requirements of this specification. At the satisfactory conclusion of this meeting, the Contractor shall be allowed to begin on-site receipt, storage (if desired), and placement of Geofoam if the requirements of Section 203.02 have been satisfied.

The Contractor shall be directly responsible for all construction quality control including earthwork and all related activities other than manufacturing and shipment of the Geofoam. The Resident will be responsible for providing construction quality assurance of the Contractor's construction activities.

The following Subsections are added:

<u>203.042 Sampling and Testing</u>

Quality assurance testing and sampling, to monitor the conformance of the Geofoam with the Specification requirements, will be completed as directed by the Resident as the Geofoam is delivered to the project site. The Contractor shall cooperate with and assist the Resident, as necessary.

On-site visual inspection of each Geofoam delivered to the project site shall be conducted to check for damage and to visually verify the labeled information on each block. Damage shall be assessed and corrected, if required, in accordance with Section 203.043.

The unit weight and geometry (dimensional tolerances) testing shall be conducted using full-sized blocks. At least one truckload of Geofoam blocks will be checked, and additional blocks will be checked if initial measurements indicate lack of compliance. A truckload of Geofoam blocks shall be defined as either a full-length box-trailer or a flat-bed trailer of typical dimensions, i.e., approximately 40 ft or more in length, fully loaded with Geofoam blocks. The Contractor shall provide a digital scale on site with sufficient capacity and precision for weighing a full-size Geofoam block. The scale shall be recently calibrated, and certification of such calibration shall be provided to the Resident. The Contractor shall provide assistance to lift and attach blocks to the scale and reasonable means of access to the blocks for block size tolerance measurements. Blocks in conformance with contract requirement can be used to make required fills.

During construction, Geofoam blocks shall be sampled for laboratory testing. The laboratory tests shall check for compliance with the physical property requirements specified in Section 203.023. Testing shall be conducted by the Resident. A minimum of one full-size Geofoam block shall be selected for sampling from the first truckload of Geofoam delivered to the job site. Additional blocks shall be selected for sampling during the course of the project, at a rate of sampling not to exceed one sample for every 325 cubic yards of Geofoam delivered or as accepted by the Resident. Portions of sampled blocks that are otherwise acceptable can be used as desired by the Contractor. The Resident shall make every reasonable effort to conduct the laboratory testing expeditiously. However, if unsatisfactory test results are obtained, the Contractor may be directed to remove potentially defective Geofoam blocks and replace them with blocks of acceptable quality per the direction of the Resident, at no additional cost to the Department.

The Resident has the right to random sample the manufacturing plant. If any block does not conform to the physical requirements or if it is damaged in any way, it may be rejected by the Resident.

As-built drawings as well as additional record keeping necessary to document the location of all Geofoam placed for the project shall be prepared. The Contractor shall cooperate with and assist the Resident as necessary.

203.043 Shipment, Storage, and Protection

The Contractor and Geofoam Supplier shall prevent damage to the Geofoam during all stages of manufacturing, shipment, storage, and construction. The Geofoam shall be handled in a manner so as to minimize physical damage to the blocks. No method of lifting or transporting the blocks that creates dents or holes in the block surfaces or losses of portions of the block shall be allowed. Prior to deliver of the Geofoam to the project site, the Contractor shall review and be thoroughly knowledgeable with the Geofoam Suppliers care and handling procedures and recommendations.

Each Geofoam block delivered to the site shall be labeled to indicate the name of the Geofoam Supplier, the dates the block was molded and shipped from the plant, the mass/weight of the entire block as measured after a satisfactory period of seasoning as specified herein, the dimensions of the block, and the actual dry density/unit weight. Additional markings and/or symbols shall be applied as necessary by the Geofoam Supplier to indicate the location of placement of each block relative to the approved shop drawings.

If the Geofoam blocks are to be stockpiled at the project site until placement, a secure storage area shall be designated for this purpose. The storage area shall be away from any heat source or construction activity that produces heat or flame. Personal tobacco smoking shall not be allowed in the storage area.

Geofoam in temporary on-site storage shall be secured with sandbags and/or other similar "soft" weights to prevent their being dislodged by wind. The Geofoam shall not be covered in any manner that might allow the buildup of heat beneath the cover. Any Geofoam fill to be exposed to sunlight for more than 30 days shall be covered with opaque material which will prevent ultraviolet light degradation.

Leveling Sand, HDPE Geomembrane and Embankment Fill over the side slopes of the Geofoam shall be placed starting at the bottom of the slope in such a manner as to prevent damage to the Geofoam. The Embankment Fill over the side slopes shall be compacted using approved manually-operated compaction equipment.

Placement of the Geofoam blocks will require special procedures and careful selection of appropriate construction equipment to prevent damage to the Geofoam fill. The surfaces of the Geofoam blocks shall not be directly traversed by any vehicle or construction equipment during or after placement of the Geofoam. Geofoam must be protected from petroleum-based solvents such as gasoline and diesel fuel.

Damage to Geofoam shall be corrected as follows:

- Slight damage (less than 0.12 cubic ft) with no linear dimension greater than 1 ft may be left in place as-is.
- Moderate damage (less than 0.35 cubic feet) with no linear dimension greater than 3.3 ft shall be filled with leveling sand.
- Geofoam with excessive damage (i.e. exceeding the "moderate" category) shall be replaced with Geofoam which meet the damage criteria. Geofoam not meeting the damage criteria may be cut to eliminate the excessive damage and the remaining undamaged portion of the block may be used within the fill, provided the undamaged portion of the block meets all other requirements.

Any damage to the Geofoam resulting from the Contractor's vehicles, equipment or operations, or other Contractor activity shall be replaced by the Contractor at no additional cost.

203.044 Placement

Geofoam shall be placed to the lines and grades shown on the Contract Drawings, reviewed shop drawings, and as directed by the Resident. There shall be no standing water or accumulated snow or ice on the subgrade within the area(s) where Geofoam blocks are placed at the time of block placement. Geofoam shall not be placed on a frozen subgrade. The surface of a layer of Geofoam to receive additional Geofoam shall be constructed with a variation in

surface tolerance of no more than ½ inch in any 10-ft interval. Geofoam blocks shall not be placed above blocks in which ice has developed on the surface. All blocks shall accurately fit relative to adjacent blocks and structures. No gaps greater than ¾ inch will be allowed on vertical joints. The finished surface of the Geofoam beneath pavement section shall be constructed to within the tolerances of 0 to -0.2 ft (below) of the indicated grade. The finished surface of the Geofoam on the side slopes that receive soil cover shall be constructed to within a tolerance of +0.3 to -0.3 ft of the indicated grade. The finished vertical surface of the Geofoam adjacent to Panel Walls (except for uppermost layer of Geofoam) shall be constructed to within a tolerance of 0 to +0.1 ft of the indicated surface. The finished vertical surface of the uppermost layer of Geofoam adjacent to Panel Walls shall be 0 ft.

Within a given layer of Geofoam, the longitudinal axes of blocks shall be parallel to each other. Blocks placed in a row in a particular layer shall be offset 2 ft relative to blocks placed in adjacent rows of the same layer as shown on the approved shop drawings. In order to avoid continuous joints, each subsequent layer of blocks shall be offset 2 ft relative to blocks placed in the previous layer. The longitudinal axes of blocks for layers above and/or below a given layer must be perpendicular to the longitudinal axes of blocks within that given layer. Connector plates, a minimum of three per block, shall be placed between horizontal layers of blocks. Geofoam blocks shall be cut using a saw or hot wire, where necessary.

Because of the low unit weight of Geofoam, the Contractor shall provide temporary ballasting and/or guying as necessary until all blocks are built into a homogeneous mass and the Distribution Slab, Embankment Fill, Panel Walls and pavement section are in place. Improper ballasting may result in the Geofoam becoming buoyant during periods of heavy rain. The Contractor shall replace Geofoam fill that becomes displaced due to buoyancy per the direction of the Resident. The Contractor shall direct surface water away from the Geofoam during Geofoam placement. With the exception of ballasting and/or guying material, no construction material other than that shown on the contract drawings shall be placed or stockpiled on the Geofoam.

Install a minimum of three galvanized connector plates for each 4 ft by 8 ft section of Geofoam material or as shown on reviewed shop drawings or as directed by the Resident. Press firmly into the rigid foam until the connector is flush with the surface. Position the next foam block as specified and set firmly before placing subsequent blocks.

<u>203.17 Preparation and Protection of the Subgrade</u>

The following paragraphs are added:

Clear and grub site in accordance with Section 201, Clearing Right of Way, and Section 203, Excavation and Embankment.

Bench into existing slopes as required to provide a level subgrade to support each layer of geofoam. The subgrade shall be cleared of vegetation and any large or sharp-edged soil particles and be reasonably level, as accepted by the Resident. Recompact subgrade to a minimum of 92 percent of maximum dry density as determined by AASHTO T180 or as accepted by the Resident. Place a uniform layer of Leveling Sand over the prepared surface, with a 6.0 inch minimum thickness. Level prepared surface to a maximum ¼ inch per 10 ft horizontal. Compact Leveling Sand to a minimum of 92 percent of maximum dry density as determined by AASHTO T180.

203.18 Method of measurement

The following sentence is added:

Geofoam furnished and placed in accordance with the Plans and Specifications shall be measured by the cubic yard in place and accepted.

203.19 Basis of Payment

The following paragraphs are added:

Geofoam will be paid for at the Contract unit price cubic yard which shall be full compensation for furnishing all qualifications, on site supervision from Supplier and Contractor, field quality control, shop drawings, labor, materials, equipment and incidentals, and any required off-site disposal of Geofoam materials necessary to complete the work.

Payment will be made under:

Pay Item		Pay Unit
203.4339	Geofoam Lightweight Fill	Cubic Yard

Table I - Geofoam Installation QA Plan

Item	Criteria	Method	Responsible Party
Excavate Prep and Subgrade	Level subgrade: general layer tolerance = 1/2 " / 10 ft	survey	Contractor
	Compaction: 92% T180 (ASTM D1557)	testing	Maine DOT
Leveling Sand	Compaction: 92% T180 (ASTM D1557)	testing	MaineDOT
	6 inch thickness (minimum)	measurement	Contractor
	Level Tolerance: 1/4 " / 10 ft	survey	Contractor
	Gradation	testing	Contractor
Blocks	Full time supervision	visual	Contractor/MaineDOT
	No equipment or vehicles permitted on blocks	visual	Contractor
	No petroleum based solvents or fuels allowed on blocks	visual	Contractor
	No smoking, heat or open flame allowed on blocks	visual	Contractor
	Only manually operated equipment allowed on blocks	visual	Contractor
	Ballast installed blocks	visual	Contractor
	Direct surface water away during periods of heavy rain	visual	Contractor
	EPS product marketing - ASTM EPS29	visual	MaineDOT
	Blocks covered - no exposure to sunlight	visual	Contractor
	Blocks density: 1.8 pcf	weight	MaineDOT/Contractor
	<5% regrind content	paperwork	MaineDOT
	Block size: 8'L x 4'W x 2'H	measurement	MaineDOT
	Block tolerance: 0.5% on all dimensions (8'=±0.48", 4'=±0.24", 2'=±0.12")	measurement	MaineDOT
	Block level tolerance: 0.2 " / 10 ft	measurement	MaineDOT
	Block squareness tolerance: 0.12" over 20"		
Block Placement	Full time supervision	visual	Contractor
	Minimum of 3 connector plates/block	visual	Contractor
	Damage assessment	visual	MaineDOT
	Trim tolerance: 0.5% of dimension	measurement	Contractor/Maine DOT
	General layer tolerance: 1/2 " / 10 ft	measurement	Contractor/Maine DOT
	Gap tolerance: 3/4" maximum	measurement	Contractor/Maine DOT
	Top layer tolerance: 0 to -0.2 ft of grade (road)	measurement	Contractor/Maine DOT
	Side slope tolerance: +0.3 to -0.3 ft of grade	measurement	Contractor/Maine DOT
	Vertical face tolerance at panel walls: 0 ft for uppermost layer, 0 to 0.1 ft for subsequent layers	measurement	Contractor/Maine DOT
	Layer offset = 2 ft	visual	Contractor
	Subsequent layers at 90 degree angle	visual	Contractor
Laboratory Tesing	Preliminary testing prior to construction: three blocks	measurement	Contractor Maine DOT
	Block sampling rate during construction (min.) = 1 block / 325 cy of geofoam	measurement	Maine DOT
Liner	40 mil thickness	visual	Contractor
	1 ft minimum wrap under geofoam mass	measurement	Contractor
	Seams down slope	visual	Contractor
	Minimum overlap: 4 in for fusion weld, 3 in for extrusion weld	measurement	Contractor
Leveling Sand	5% slope on geofoam side steps (see Geofoam detail sheet in CD's)	measurement	Contractor
EPS Certification	Certification Letter & Test and Inspection Reports from Fabrication Plant		EPS Supplier
Quantities	Geofoam in place	measurement	Contractor/MaineDOT

SPECIAL PROVISION
DIVISION 400
PAVEMENTS

SECTION 401 - HOT MIX ASPHALT PAVEMENT

401.01 Description The Contractor shall furnish and place one or more courses of Hot Mix Asphalt Pavement (HMA) on an approved base in accordance with the contract documents and in reasonably close conformity with the lines, grades, thickness, and typical cross sections shown on the plans or established by the Resident. The Department will accept this work under Quality Assurance provisions, in accordance with these specifications and the requirements of Section 106 – Quality, the provisions of AASHTO M 323 except where otherwise noted in sections 401 and 703 of these specifications, and the Maine DOT Policies and Procedures for HMA Sampling and Testing.

401.02 Materials Materials shall meet the requirements specified in Section 700 - Materials:

Asphalt Cement	702.01
Aggregates for HMA Pavement	703.07
HMA Mixture Composition	703.09

401.021 Recycled Asphalt Materials Recycled Asphalt Pavement (RAP) may be introduced into the mixture at percentages approved by the Department. If approved by the Department, the Contractor shall provide documentation stating the source, test results for average residual asphalt content, and stockpile gradations showing RAP materials have been sized to meet the maximum aggregate size requirements of each mix designation. The Department will obtain samples for verification and approval prior to its use.

In the event that RAP source or properties change, the Contractor shall notify the Department of the change and submit new documentation stating the new source or properties a minimum of 72 hours prior to the change to allow for obtaining new samples and approval.

401.03 Composition of Mixtures The Contractor shall compose the Hot Mix Asphalt Pavement with aggregate, Performance Graded Asphalt Binder (PGAB), and mineral filler if required. HMA shall be designed and tested according to AASHTO R35 and the volumetric criteria in Table 1. The Contractor shall size, uniformly grade, and combine the aggregate fractions in proportions that provide a mixture meeting the grading requirements of the Job Mix Formula (JMF). The Contractor may use a maximum of 15% reclaimed asphalt pavement (RAP) in any base, binder, surface, or shim course. The Contractor may be allowed to use more than 15% RAP, up to a maximum of 25% RAP, in a base, binder, or shim course provided that PG 58-34 asphalt binder is used in the mixture.

The Contractor shall submit for Department approval a JMF to the Central Laboratory in Bangor for each mixture to be supplied. The Department may approve 1 active design per nominal maximum size, per traffic level, per plant, plus a 9.5mm “fine” mix for shimming and where required, a non-RAP design for bridge decks. The Department shall then have 15 calendar days in which to process a new design before approval. The JMF shall establish a single percentage of aggregate passing each sieve size within the limits shown in section 703.09. The mixture shall be designed and produced, including all production tolerances, to comply with the allowable control points for the particular type of mixture as outlined in 703.09. The JMF shall state the original source, gradation, and percentage to be used of each portion of the aggregate including RAP when utilized, and mineral filler if required. It shall also state the proposed PGAB content, the name and location of the refiner, the supplier, the source of PGAB submitted for approval, the type of PGAB modification if applicable, and the location of the terminal if applicable.

In addition, the Contractor shall provide the following information with the proposed JMF:

Properly completed JMF indicating all mix properties (Gmm, VMA, VFB, etc.)
Stockpile Gradation Summary
Design Aggregate Structure Consensus Property Summary
Design Aggregate Structure Trial Blend Gradation Plots (0.45 power chart)
Trial Blend Test Results for at least three different asphalt contents
Design Aggregate Structure for at least three trial blends
Test results for the selected aggregate blend at a minimum of three binder contents
Specific Gravity and temperature/viscosity charts for the PGAB to be used
Recommended mixing and compaction temperatures from the PGAB supplier
Material Safety Data Sheets (MSDS) For PGAB
Asphalt Content vs. Air Voids trial blend curve
Test report for Contractor's Verification sample
Test reports for PG binder content and gradation of RAP when used in the JMF

At the time of JMF submittal, the Contractor shall identify and make available the stockpiles of all proposed aggregates at the plant site. There must be a minimum of 135 Mg [150 ton] for stone stockpiles, 70 Mg [75 ton] for sand stockpiles, and 45 Mg [50 ton] of blend sand before the Department will sample. The Department shall obtain samples for laboratory testing. The Contractor shall also make available to the Department the PGAB proposed for use in the mix in sufficient quantity to test the properties of the asphalt and to produce samples for testing of the mixture. Before the start of paving, the Contractor and the Department shall split a production sample for evaluation. The Contractor shall test its split of the sample and determine if the results meet the requirements of the Department's written policy for mix design verification (See Maine DOT Policies and Procedures for HMA Sampling and Testing available at the Central Laboratory in Bangor). If the results are found to be acceptable, the Contractor will forward their results to the Department's Lab, which will test the Department's split of the sample. The results of the two split samples will be compared and shared between the Department and the Contractor. If the Department finds the mixture acceptable, an approved JMF will be forwarded to the Contractor and paving may commence. The first day's production shall be monitored, and the approval may be withdrawn if the mixture exhibits undesirable characteristics such as checking, shoving or displacement. The Contractor shall be allowed to submit aim changes within 24 hours of receipt of the first Acceptance test result. Adjustments will be allowed of up to 2% on the percent passing the 2.36 mm sieve through the 0.075 mm and 3% on the percent passing the 4.75 mm or larger sieves. Adjustments will be allowed on the %PGAB of up to 0.2%. Adjustments will be allowed on GMM of up to 0.010.

The Contractor shall submit a new JMF for approval each time a change in material source or materials properties is proposed. The same approval process shall be followed. The cold feed percentage of any aggregate may be adjusted up to 10 percentage points from the amount listed on the JMF, however no aggregate listed on the JMF shall be eliminated. The cold feed percentage for RAP may be adjusted up to 5 percentage points from the amount listed on the JMF but shall not exceed the maximum allowable percentage for RAP for the specific application.

TABLE 1: VOLUMETRIC DESIGN CRITERIA

Design ESAL's (Millions)	Required Density (Percent of G_{mm})			Voids in the Mineral Aggregate (VMA)(Minimum Percent)					Voids Filled with Binder (VFB) (Minimum %)	Fines/Eff. Binder Ratio
				Nominal Maximum Aggregate Size (mm)						
	$N_{initial}$	N_{design}	N_{max}	25	19	12.5	9.5	4.75		
<0.3	≤91.5	96.0	≤98.0	13.0	14.0	15.0	16.0	16.0	70-80	0.6-1.2
0.3 to <3	≤90.5								65-80	
3 to <10	≤89.0								65-80*	
10 to <30										
≥ 30										

*For 9.5 mm nominal maximum aggregate size mixtures, the maximum VFB is 82.
*For 4.75 mm nominal maximum aggregate size mixtures, the maximum VFB is 84.

401.04 Temperature Requirements After the JMF is established, the temperatures of the mixture shall conform to the following tolerances:

In the truck at the mixing plant – allowable range 135° to 163°C [275 to 325°F]
At the Paver – allowable range 135° to 163°C [275 to 325°F]

The JMF and the mix subsequently produced shall meet the requirements of Tables 1 and Section 703.07.

401.05 Performance Graded Asphalt Binder Unless otherwise noted in Special Provision 403 - Hot Mix Asphalt Pavement, the PGAB shall be 64-28, except that for mixtures containing greater than 15% but no more than 25% RAP the PGAB shall be PG 58-34. The PGAB shall meet the applicable requirements of AASHTO M320 - Standard Specification for PGAB. The Contractor shall provide the Department with an approved copy of the Quality Control Plan for PGAB in accordance with AASHTO R 26 Certifying Suppliers of PGAB. The Contractor shall request approval from the Department for a change in PGAB supplier or source by submitting documentation stating the new supplier or source a minimum of 24 hours prior to the change. In the event that the PGAB supplier or source is changed, the Contractor shall make efforts to minimize the occurrence of PGAB co-mingling.

401.06 Weather and Seasonal Limitations The State is divided into two paving zones as follows:

a. Zone 1 Areas north of US Route 2 from Gilead to Bangor and north of Route 9 from Bangor to Calais.
b. Zone 2 Areas south of Zone 1 including the US Route 2 and Route 9 boundaries.

The Contractor may place Hot Mix Asphalt Pavement for use other than a traveled way wearing course in either Zone between the dates of April 15th and November 15th, provided that the air temperature as determined by an approved thermometer (placed in the shade at the paving location) is 4°C [40°F] or higher and the area to be paved is not frozen. The Contractor may place Hot Mix Asphalt Pavement as traveled way wearing course in Zone 1 between the dates of May 1st and the Saturday following October 1st and in Zone 2 between the dates of April 15th and the Saturday following October 15th, provided the air temperature determined as above is 10°C [50°F] or higher. For the purposes of this Section, the traveled way includes truck lanes, ramps, approach roads and auxiliary lanes. The atmospheric temperature for all courses on bridge decks shall be 10°C [50°F] or higher.

Hot Mix Asphalt Pavement used for curb, driveways, sidewalks, islands, or other incidentals is not subject to seasonal limitations, except that conditions shall be satisfactory for proper handling and finishing of the mixture. All mixtures used for curb, driveways, sidewalks, islands, or other incidentals shall conform to section 401.04 - Temperature Requirements. Unless otherwise specified, the Contractor shall not place Hot Mix Asphalt Pavement on a wet or frozen surface and the air temperature shall be 4°C [40°F] or higher.

On all sections of overlay with wearing courses less than 25 mm [1 in] thick, the wearing course for the travelway and adjacent shoulders shall be placed between the dates of May 15th and the Saturday following September 15th.

On all sections of overlay with wearing courses less than 1 inch thick, the wearing course for the travelway and adjacent shoulders shall be placed between the dates of June 1st and the Saturday following September 1st if the work is to be performed, either by contract requirement, or Contractor option, during conditions defined as "night work".

401.07 Hot Mix Asphalt Plant

401.071 General Requirements HMA plants shall conform to AASHTO M156.

a. Truck Scales When the hot mix asphalt is to be weighed on scales meeting the requirements of Section 108 - Payment, the scales shall be inspected and sealed by the State Sealer as often as the Department deems necessary to verify their accuracy.

Plant scales shall be checked prior to the start of the paving season, and each time a plant is moved to a new location. Subsequent checks will be made as determined by the Resident. The Contractor will have at least ten 20 Kg [50 pound] masses for scale testing.

401.072 Automation of Batching Batch plants shall be automated for weighing, recycling, and monitoring the system. In the case of a malfunction of the printing system, the requirements of Section 401.074 c. of this specification will apply.

The batch plant shall accurately proportion the various materials in the proper order by weight. The entire batching and mixing cycle shall be continuous and shall not require any manual operations. The batch plant shall use auxiliary interlock circuits to trigger an audible alarm whenever an error exceeding the acceptable tolerance occurs. Along with the alarm, the printer shall print an asterisk on the delivery slip in the same row containing the out-of-tolerance weight. The automatic proportioning system shall be capable of consistently delivering material within the full range of batch sizes. When RAP is being used, the plant must be capable of automatically compensating for the moisture content of the RAP.

All plants shall be equipped with an approved digital recording device. The delivery slip load ticket shall contain information required under Section 108.1.3 - Provisions Relating to Certain Measurements, Mass and paragraphs a, b, and c of Section 401.073

401.073 Automatic Ticket Printer System on Automatic HMA Plant An approved automatic ticket printer system shall be used with all approved automatic HMA plants. The requirements for delivery slips for payment of materials measured by weight, as given in the following Sections, shall be waived: 108.1.3 a., 108.1.3 b., 108.1.3 c., and 108.1.3 d. The automatic printed ticket will be considered as the Weight Certificate.

The requirements of Section 108.1.3 f. - Delivery Slips, shall be met by the weigh slip or ticket, printed by the automatic system, which accompanies each truckload, except for the following changes:

a. The quantity information required shall be individual weights of each batch or total net weight of each truckload.
b. Signatures (legible initials acceptable) of Weighmaster (required only in the event of a malfunction as described in 401.074 c.).
c. The MDOT designation for the JMF.

401.074 Weight Checks on Automatic HMA Plant At least twice during each 5 days of production either of the following checks will be performed:

a. A loaded truck may be intercepted and weighed on a platform scale that has been sealed by the State Sealer of Weights and Measures within the past 12 months. Whenever the discrepancy in net weights is greater than 1.0%, but does not exceed 1.5%, the plant inspector will notify the producer to take corrective action; payment will still be governed by the printed ticket.

The producer will be allowed a period of two days to make any needed repairs to the plant and/or platform scales so that the discrepancy in net weights between the two is less than 1.0%. If the discrepancy exceeds 1.5%, the plant will be allowed to operate as long as payment is determined by truck platform scale net weight. Effective corrective action shall be taken within two working days.

b. Where platform scales are not readily available, a check will be made to verify the accuracy and sensitivity of each scale within the normal weighing range and to assure that the interlocking devices and automatic printer system are functioning properly.

c. In the event of a malfunction of the automatic printer system, production may be continued without the use of platform truck scales for a period not to exceed the next two working days, providing total weights of each batch are recorded on weight tickets and certified by a Licensed Public Weighmaster.

401.08 Hauling Equipment Trucks for hauling Hot Mix Asphalt Pavement shall have tight, clean, and smooth metal dump bodies, which have been thinly coated with a small amount of approved release agent to prevent the mixture from adhering to the bodies. Solvent based agents developed to strip asphalts from aggregates will not be allowed as release agents.

All truck dump bodies shall have a cover of canvas or other water repellent material capable of heat retention, which completely covers the mixture. The cover shall be securely fastened on the truck, unless unloading.

All truck bodies shall have an opening on both sides, which will accommodate a thermometer stem. The opening shall be located near the midpoint of the body, at least 300 mm [12 in] above the bed.

401.09 Pavers Pavers shall be self-contained, self-propelled units with an activated screed (heated if necessary) capable of placing courses of Hot Mix Asphalt Pavement in full lane widths specified in the contract on the main line, shoulder, or similar construction.

On projects with no price adjustment for smoothness, pavers shall be of sufficient class and size to place Hot Mix Asphalt Pavement over the full width of the mainline travel way with a 3 m [10 ft] minimum main screed with activated extensions.

The Contractor shall place Hot Mix Asphalt Pavement on the main line with a paver using an automatic grade and slope controlled screed, unless otherwise authorized by the Department. The controls shall automatically adjust the screed and increase or decrease the layer thickness to compensate for irregularities in the preceding course. The controls shall maintain the proper transverse slope and be readily adjustable so that transitions and superelevated curves can be properly paved. The controls shall operate from a fixed or moving reference such as a grade wire or ski type device (floating beam) with a minimum length of 10 m [30 ft], a non-contact grade control with a minimum span of 7.3 m [24 ft], except that a 12 m [40 ft] reference shall be used on Expressway projects.

The Contractor shall operate the paver in such a manner as to produce a visually uniform surface texture and a thickness within the requirements of Section 401.101 - Surface Tolerances. The paver shall have a receiving hopper with sufficient capacity for a uniform spreading operation and a distribution system to place the mixture uniformly, without segregation in front of the screed. The screed assembly shall produce a finished surface of the required evenness and texture without tearing, shoving, or gouging the mixture. Pavers with extendible screeds shall have auger extensions and tunnel extenders as per the manufacturer's recommendations, a copy of which shall be available if requested.

The Contractor shall have the paver at the project site sufficiently before the start of paving operations to be inspected and approved by the Department. The Contractor shall repair or replace any paver found worn or defective, either before or during placement, to the satisfaction of the Department. Pavers that produce an unevenly textured or non-uniform mat will be repaired or replaced before continuing to place HMA on MaineDOT projects.
On a daily basis, the Contractor shall perform nuclear density testing across the mat being placed, prior to being compacted by equipment., at 300 mm [12 in] intervals, If the density values vary by more than 2.0% from the mean, the Contractor shall make adjustments to the screed until the inconsistencies are remedied.

Failure to replace or repair defective placement equipment may result in a letter of suspension of work and notification of a quality control violation resulting in possible monetary penalties as governed by Section 106 - Quality

401.10 Rollers Rollers shall be static steel, pneumatic tire, or approved vibrator type. Rollers shall be in good mechanical condition, capable of starting and stopping smoothly, and be free from backlash when reversing direction. Rollers shall be equipped and operated in such a way as to prevent the picking up of hot mixed material by the roller surface. The use of rollers, which result in crushing of the aggregate or in displacement of the HMA will not be permitted. Any Hot Mix Asphalt Pavement that becomes loose, broken, contaminated, shows an excess or deficiency of Performance Graded Asphalt Binder, or is in any other way defective shall be removed and replaced at no additional cost with fresh Hot Mix Asphalt Pavement, which shall be immediately compacted to conform to the adjacent area.

The Contractor shall repair or replace any roller found to be worn or defective, either before or during placement, to the satisfaction of the Department. Rollers that produce grooved, unevenly textured or non-uniform mat will be repaired or replaced before continuing to place HMA on MaineDOT projects.

The type of rollers to be used and their relative position in the compaction sequence shall generally be the Contractor's option, provided specification densities are attained and with the following requirements:

a. On variable-depth courses, the first lift of pavement over gravel, reclaimed pavement, an irregular surface, or on bridges, at least one roller shall be 14.5 Mg [16 ton] pneumatic-tired. Unless otherwise allowed by the Resident, pneumatic-tired rollers shall be equipped with skirting to minimize the pickup of HMA materials from the paved surface. When required by the Resident, the roller shall be ballasted to 18.1 Mg [20 ton].

b. Compaction with a vibratory or steel wheel roller shall precede pneumatic-tired rolling, unless otherwise authorized by the Department.

c. Vibratory rollers shall not be operated in the vibratory mode when checking or cracking of the mat occurs, or on bridge decks.

d. Any method, which results in cracking or checking of the mat, will be discontinued and corrective action taken.

The maximum operating speed for a steel wheel or pneumatic roller shall not exceed the manufacturer's recommendations, a copy of which shall be available if requested.

401.101 Surface Tolerances The Department will check surface tolerance utilizing the following methods :

a.) A 5 m [16 ft] straightedge or string line placed directly on the surface, parallel to the centerline of pavement.
b.) A 3 m [10 ft] straightedge or string line placed directly on the surface, transverse to the centerline of pavement.

The Contractor shall correct variations exceeding 6 mm [¼ in] by removing defective work and replacing it with new material as directed by the Department. The Contractor shall furnish a 10 foot straightedge for the Departments use.

401.11 Preparation of Existing Surface The Contractor shall thoroughly clean the surface upon which Hot Mix Asphalt Pavement is to be placed of all objectionable material. When the surface of the existing base or pavement is irregular, the Contractor shall bring it to uniform grade and cross section. All surfaces shall have a tack coat applied prior to placing any new HMA course. Tack coat shall conform to the requirements of Section 409 – Bituminous Tack Coat, Section 702 – Bituminous Material, and all applicable sections of the contract.

401.12 Hot Mix Asphalt Documentation The Contractor and the Department shall agree on the amount of Hot Mix Asphalt Pavement that has been placed each day.

401.13 Preparation of Aggregates The Contractor shall dry and heat the aggregates for the HMA to the required temperature. The Contractor shall properly adjust flames to avoid physical damage to the aggregate and to avoid depositing soot on the aggregate.

401.14 Mixing The Contractor shall combine the dried aggregate in the mixer in the amount of each fraction of aggregate required to meet the JMF. The Contractor shall measure the amount of PGAB and introduce it into the mixer in the amount specified by the JMF.

The Contractor shall produce the HMA at the temperature established by the JMF.

The Contractor shall dry the aggregate sufficiently so that the HMA will not flush, foam excessively, or displace excessively under the action of the rollers. The Contractor shall introduce the aggregate into the mixer at a temperature of not more than 14°C [25°F] above the temperature at which the viscosity of the PGAB being used is 0.150 Pa•s.

The Contractor shall store and introduce into the mixer the Performance Graded Asphalt Binder at a uniformly maintained temperature at which the viscosity of the PGAB is between 0.150 Pa•s and 0.300 Pa•s. The aggregate shall be coated completely and uniformly with a thorough distribution of the PGAB. The Contractor shall determine the wet mixing time for each plant and for each type of aggregate used.

401.15 Spreading and Finishing On areas where irregularities or unavoidable obstacles make the use of mechanical spreading and finishing equipment impracticable, the Contractor shall spread, rake, and lute the HMA with hand tools to provide the required compacted thickness. Solvent based agents developed to strip asphalts from aggregates will not be allowed as release agents.

On roadways with adjoining lanes carrying traffic, the Contractor shall place each course over the full width of the traveled way section being paved that day, unless otherwise noted by the Department in Section 403 - Hot Bituminous Pavement.

401.16 Compaction Immediately after the Hot Mix Asphalt Pavement has been spread, struck off, and any surface irregularities adjusted, the Contractor shall thoroughly and uniformly compact the HMA by rolling.

The Contractor shall roll the surface when the mixture is in the proper condition and when the rolling does not cause undue displacement, cracking, or shoving. The Contractor shall prevent adhesion of the HMA to the rollers or vibrating compactors without the use of fuel oil or other petroleum based release agents. Solvents designed to strip asphalt binders from aggregates will not be permitted as release agents on equipment, tools, or pavement surfaces.
The Contractor shall immediately correct any displacement occurring as a result of the reversing of the direction of a roller or from other causes to the satisfaction of the Department. Any operation other than placement of variable depth shim course that results in breakdown of the aggregate shall be discontinued. Any new pavement that shows obvious cracking, checking, or displacement shall be removed and replaced for the full lane width as directed by the Resident at no cost to the Department.

Along forms, curbs, headers, walls, and other places not accessible to the rollers, the Contractor shall thoroughly compact the HMA with mechanical vibrating compactors. The Contractor shall only use hand tamping in areas inaccessible to all other compaction equipment. On depressed areas, the Contractor may use a trench roller or cleated compression strips under a roller to transmit compression to the depressed area.

Any HMA that becomes unacceptable due to cooling, cracking, checking, segregation or deformation as a result of an interruption in mix delivery shall be removed and replaced, with material that meets contract specifications at no cost to the Department.

401.17 Joints The Contractor shall construct wearing course transverse joints in such a manner that minimum tolerances shown in Section 401.101 - Surface Tolerances are met when measured with a straightedge.

The paver shall maintain a uniform head of HMA during transverse and longitudinal joint construction.

The HMA shall be free of segregation and meet temperature requirements outlined in section 401.04. Transverse joints of the wearing course shall be straight and neatly trimmed. The Contractor may form a vertical face exposing the full depth of the course by inserting a header, by breaking the bond with the underlying course, or by cutting back with hand tools. The Department may allow feathered or "lap" joints on lower base courses or when matching existing base type pavements.

Longitudinal joints shall be generally straight to the line of travel, and constructed in a manner that best ensure joint integrity. Methods or activities that prove detrimental to the construction of straight, sound longitudinal joints will be discontinued.

The Contractor shall apply a coating of emulsified asphalt immediately before paving all joints to the vertical face and 75 mm [3 in] of the adjacent portion of any pavement being overlaid except those formed by pavers operating in echelon. The Contractor shall use an approved spray apparatus designed for covering a narrow surface. The Department may approve application by a brush for small surfaces, or in the event of a malfunction of the spray apparatus, but for a period of not more than one working day.

Where pavement under this contract joins an existing pavement, or when the Department directs, the Contractor shall cut the existing pavement along a smooth line, producing a neat, even, vertical joint. The Department will not permit broken or raveled edges. The cost of all work necessary for the preparation of joints is incidental to related contract pay items.

401.18 Quality Control Method A, B & C The Contractor shall operate in accordance with the approved Quality Control Plan (QCP) to assure a product meeting the contract requirements. The QCP shall meet the requirements of Section 106.6 - Acceptance and this Section. The Contractor shall not begin paving operations until the Department approves the QCP in writing.

Prior to placing any mix, the Department and the Contractor shall hold a Pre-paving conference to discuss the paving schedule, source of mix, type and amount of equipment to be used, sequence of paving pattern, rate of mix supply, random sampling, project lots and sublots and traffic control. A copy of the QC random numbers to be used on the project shall be provided to The Resident. The Departments' random numbers for Acceptance testing shall be generated and on file with the Resident and the Project Manager. All field and plant supervisors including the responsible onsite paving supervisor shall attend this meeting.

The QCP shall address any items that affect the quality of the Hot Mix Asphalt Pavement including, but not limited to, the following:

a. JMF(s)
b. Hot mix asphalt plant details
c. Stockpile Management (to include provisions for a minimum 2 day stockpile)
d. Make and type of paver(s)
e. Make and type of rollers including weight, weight per inch of steel wheels, and average contact pressure for pneumatic tired rollers
f. Name of QCP Administrator, and certification number
g. Name of Process Control Technician(s) and certification number(s)
h. Name of Quality Control Technicians(s) and certification number(s)
i. Mixing & transportation including process for ensuring that truck bodies are clean and free of debris or contamination that could adversely affect the finished pavement
j. Testing Plan
k. Laydown operations including longitudinal joint construction, procedures for avoiding paving in inclement weather, type of release agent to be used on trucks tools and rollers, compaction of shoulders, tacking of all joints, methods to ensure that segregation is minimized, procedures to determine the maximum rolling and paving speeds based on best engineering practices as well as past experience in achieving the best possible smoothness of the pavement. Solvent based agents developed to strip asphalts from aggregates will not be allowed as release agents.
l. Examples of Quality Control forms including a daily plant report and a daily paving report
m. Silo management and details (can show storage for use on project of up to 36 hours)
n. Provisions for varying mix temperature due to extraordinary conditions
o. Name and responsibilities of the Responsible onsite Paving Supervisor
p. Method for calibration/verification of Density Gauge
q. A note that all testing will be done in accordance with AASHTO and the Maine DOT Policies and Procedures for HMA Sampling and Testing.
r. A note detailing conditions under which the percent of RAP will vary from that specified on the JMF.
s. A detailed procedure outlining when production will be halted due to QC or Acceptance testing results.
t. A plan to address the change in PGAB source or supplier and the potential co-mingling of differing PGAB's.
u. A procedure to take immediate possession of acceptance samples once released by MaineDOT and deliver said samples to the designated acceptance laboratory.

The QCP shall include the following technicians together with following minimum requirements:

a. QCP Administrator - A qualified individual shall administer the QCP. The QCP Administrator must be a full-time employee of or a consultant engaged by the Contractor or paving subcontractor. The QCP Administrator shall have full authority to institute any and all actions necessary for the successful operation of the QCP. The QCP Administrator (or its designee in the QCP Administrator's absence) shall be available to communicate with the Department at all times. The QCP Administrator shall be certified as a Quality Assurance Technologist certified by the New England Transportation Technician Certification Program (NETTCP).

b. Process Control Technician(s) (PCT) shall utilize test results and other quality control practices to assure the quality of aggregates and other mix components and control proportioning to meet the JMF(s). The PCT shall inspect all equipment used in mixing to assure it is operating properly and that mixing conforms to the mix design(s) and other Contract requirements. The QCP shall detail how these duties and responsibilities are to be accomplished and documented, and whether more than one PCT is required. The Plan shall include the criteria to be utilized by the PCT to correct or reject unsatisfactory materials. The PCT shall be certified as a Plant Technician by the NETTCP.

c. Quality Control Technician(s) (QCT) shall perform and utilize quality control tests at the job site to assure that delivered materials meet the requirements of the JMF(s). The QCT shall inspect all equipment utilized in transporting, laydown, and compacting to assure it is operating properly and that all laydown and compaction conform to the Contract requirements. The QCP shall detail how these duties and responsibilities are to be accomplished and documented, and whether more than one QCT is required. The QCP shall include the criteria utilized by the QCT to correct or reject unsatisfactory materials. The QCT shall be certified as a Paving Inspector by the NETTCP.

The QCP shall detail the coordination of the activities of the Plan Administrator, the PCT and the QCT. The Project Superintendent shall be named in the QCP, and the responsibilities for successful implementation of the QCP shall be outlined.

The Contractor shall sample, test, and evaluate Hot Mix Asphalt Pavement in accordance with the following minimum frequencies:

TABLE 2 : MINIMUM QUALITY CONTROL FREQUENCIES

Test or Action	Frequency	Test Method
Temperature of mix	6 per day at street and plant	-
Temperature of mat	4 per day	-
%TMD (Surface)	1 per 125 Mg [125 ton] (As noted in QC Plan)	ASTM D2950
%TMD (Base)	1 per 250 Mg [250 ton] (As noted in QC Plan)	AASHTO T269
Fines / Effective Binder	1 per 500 Mg [500 ton]	AASHTO T 312*
Gradation	1 per 500 Mg [500 ton]	AASHTO T30
PGAB content	1 per 500 Mg [500 ton]	AASHTO T164 or T308
Voids at N_{design}	1 per 500 Mg [500 ton]	AASHTO T 312*
Voids in Mineral Aggregate at N_{design}	1 per 500 Mg [500 ton]	AASHTO T 312*
Rice Specific Gravity	1 per 500 Mg [500 ton]	AASHTO T209
Coarse Aggregate Angularity	1 per 5000 Mg [5000 ton]	ASTM D5821
Flat and Elongated Particles	1 Per 5000 Mg [5000 ton]	ASTM D4791
Fine Aggregate Angularity	1 Per 5000 Mg [5000 ton]	AASHTO T304

. *Method A and B only

The Contractor may utilize innovative equipment or techniques not addressed by the Contract documents to produce or monitor the production of the mix, subject to approval by the Department.

The Contractor shall submit all Hot Mix Asphalt Pavement plant test reports, inspection reports and updated pay factors in writing, signed by the appropriate technician and present them to the Department by 1:00 P.M. on the next working day, except when otherwise noted in the QCP due to local restrictions. The Contractor shall also retain splits of the previous 5 QC tests, with QC results enclosed for random selection and testing by The Department during QA inspections of the HMA production facility. Test results of splits that do not meet the Dispute Resolution Variance Limits in Table 10 shall trigger an investigation by the MDOT Independent Assurance Unit, and may result in that lab losing NETTCP certification and the ability to request a dispute [Section 401.223 - Process for Dispute Resolution (Methods A , B and C only)].

The Contractor shall make density test results, including randomly sampled densities, available to the Department onsite. Summaries of each day's results, including a daily paving report, shall be recorded and signed by the QCT and presented to the Department by 1:00 p.m. the next working day.

The Contractor shall have a testing lab at the plant site, equipped with all testing equipment necessary to complete the tests in Table 2. The Contractor shall locate an approved Gyratory Compactor at the plant testing lab or within 30 minutes of the plant site.

The Contractor shall fill all holes in the pavement resulting from cutting cores by the Contractor or the Department with a properly compacted, acceptable mixture no later than the following working day. Before filling, the Contractor shall carefully clean the holes and apply a coating of emulsified asphalt. On surface courses, cores shall not be cut except for Verification of the Nuclear Density Gauge, at a rate not to exceed 3 per day or 2 per 900 Mg [1000 ton] placed.
The Contractor shall monitor plant production using running average of three control charts as specified in Section 106 - Quality. Control limits shall be as noted in Table 3 below. The UCL and LCL, shall not exceed the allowable control points for the particular type of mixture as outlined in Table 1 of section 703.09

TABLE 3: Control Limits

Property	UCL and LCL
Passing 4.75 mm and larger sieves	Target +/-4.0
Passing 2.36 mm sieve	Target +/-2.5
Passing .075 mm sieve	Target +/-1.2
PGAB Content*	Target +/-0.3
Voids in the Mineral Aggregate	LCL = LSL + 0.2
% Voids at N_{design}	JMF Target +/-1.3

*Based on AASHTO T 308

The Contractor shall cease paving operations whenever one of the following occurs on a lot in progress:

a. Method A: The Pay Factor for VMA, Voids @ N_d, Percent PGAB, composite gradation, VFB, fines to effective binder or density using all Acceptance or all Quality Control tests for the current lot is less than 0.85.
b. Method B:The Pay Factor for VMA, Voids @ N_d, Percent PGAB, composite gradation, VFB, fines to effective binder or density using all Acceptance or all Quality Control tests for the current lot is less than 0.90.

c. Method C: The Pay Factor for VMA, Voids @ N_d, Percent PGAB, percent passing the nominal maximum sieve, percent passing 2.36 mm sieve, percent passing 0.300 mm sieve or percent passing 0.075 mm sieve using all Acceptance or all available Quality Control tests for the current lot is less than 0.85.
d. The Coarse Aggregate Angularity or Fine Aggregate Angularity value falls below the requirements of Table 3: Aggregate Consensus Properties Criteria in Section 703.07 for the design traffic level.

e. Each of the first 2 control tests for a Method A or B lot fall outside the upper or lower limits for VMA, Voids @ Nd, or Percent PGAB; or under Method C, each of the first 2 control tests for the lot fall outside the upper or lower limits for the nominal maximum, 2.36 mm, 0.300 mm or 0.075 mm sieves, or percent PGAB.

f. The Flat and Elongated Particles value exceeds 10% by ASTM D4791.

g. There is any visible damage to the aggregate due to over-densification other than on variable depth shim courses.

h. The Contractor fails to follow the approved QCP.

i. The Contractor's control chart shows the process to be out of control (defined as a single point outside of the control limits on the running average of three chart.) on any property listed in Table 3: Control Limits.

The Contractor shall immediately notify the Resident in writing as to the reason for shutdown, as well as the proposed corrective action. Failure to do so will be treated as a second incident under 106.4.6 QCP Non-compliance. The Department will consider corrective action acceptable if the pay factor for the failing property increases, based on samples already in transit, or a verification sample is tested and the property falls within the specification limits.

In cases where the corrective action can be accomplished immediately, such as batch weight or cold feed changes, the Contractor may elect to resume production once the corrective action is completed. Additional QC testing shall be performed to verify the effectiveness of the corrective action. Subsequent occurrences of shutdown for the same property in a Lot in progress will require paving operations to cease. Paving operations shall not resume until the Contactor and the Department determines that material meeting the Contract requirements will be produced. The Department may allow the Contractor to resume production based upon a passing QC sample, with a split of the sample being sent to the Department for verification testing. If the submitted verification sample test results fall outside the specification limits, the Contractor shall cease production until a verification sample is submitted to the Department has been tested by the Department and found to be within specification limits.
.
The Department retains the exclusive right, with the exception of the first day's production of a new JMF, to determine whether the resumption of production involves a significant change to the production process. If the Department so determines, then the current lot will be terminated, a pay factor established, and a new lot will begin.

<u>401.19 Quality Control Method D</u> For Items covered under Method D, the Contractor shall submit a modified QC Plan detailing, how the mix is to be placed, what equipment is to be used, and what HMA plant is to be used. All mix designs (JMF) shall be approved and verified by MDOT prior to use. Certified QC personnel shall not be required. The Contractor shall certify the mix and the test results for each item by a Certificate of Compliance.

401.20 Acceptance Method A, B & C These methods utilizes Quality Level Analysis and pay factor specifications.
For Hot Mix Asphalt Pavement designated for acceptance under Quality Assurance provisions, the Department will sample once per sublot on a statistically random basis, test, and evaluate in accordance with the following Acceptance Criteria:

TABLE 4: ACCEPTANCE CRITERIA

PROPERTIES	POINT OF SAMPLING	TEST METHOD
Gradation	Paver Hopper	AASHTO T30
PGAB Content	Paver Hopper	AASHTO T308
%TMD (Surface)	Mat behind all Rollers	AASHTO T269
%TMD (Base or Binder)	Mat behind all Rollers	AASHTO T269
Air Voids at N_d	Paver Hopper	AASHTO T 312
%VMA at N_d	Paver Hopper	AASHTO T 312
Fines to Effective Binder	Paver Hopper	AASHTO T 312
%VFB	Paver Hopper	AASHTO T 312

On the first day of production of a JMF the Department will take three random samples, which will be used to calculate the quality level of the in-place material in the event the lot is terminated prematurely. Only one of the three will be tested, the other two will be held onsite until at least three random samples have been taken, at which time the other two will be discarded.

Lot Size For purposes of evaluating all acceptance test properties, a lot shall consist of the total quantity represented by each item listed under the lot size heading.

If the Department terminates a Lot prematurely, the samples from the first day's production will be used to calculate a volumetric pay factor, and a minimum of three cores will be used for a density pay factor, if applicable, for quantities placed to date.

Sublot size - Refer to section 401.201, 401.202, and 401.203 for minimum size and number of sublots. The quantity represented by each sample will constitute a sublot.

If there is less than one-half of a sublot remaining at the end, then it shall be combined with the previous sublot. If there is more than one-half sublot remaining at the end, then it shall constitute the last sublot and shall be represented by test results. If it becomes apparent partway through a Lot that, due to an underrun, there will be insufficient mix quantity to obtain the minimum number of sublots needed, the Resident may adjust the size of the remaining sublots and select new sample locations based on the estimated quantity of material remaining in the Lot.

Acceptance Testing The Department will obtain samples of Hot Mix Asphalt Pavement in conformance with AASHTO T168 Sampling Bituminous Paving Mixtures, and the Maine DOT Policies and Procedures for HMA Sampling and Testing, which will then be transported by the Contractor to the designated MDOT Laboratory within 48 hours (except when otherwise noted in the project specific QCP due to local restrictions), as directed by MDOT in approved transport containers to be provided by the Department, unless otherwise directed by the Resident. Failure to deliver an acceptance sample to the designated acceptance laboratory will be considered the second incident under 106.4.6–QCP Non-Compliance.

The Department will take the sample randomly within each sublot. Target values shall be as specified in the JMF. The Department will use Table 5 for calculating pay factors for gradation, PGAB Content, Air Voids at N_{design}, VMA, Fines to Effective Binder and VFB. The Department will withhold reporting of the test results for the Acceptance sample until 7:00 AM, on the second working day of receipt of the sample, or after receipt of the Contractors results of the Acceptance sample split. Upon conclusion of each lot, where there is a minimum of four sublots, results shall be examined for statistical outliers, as stated in Section 106.7.2 - Statistical Outliers.

Isolated Areas During the course of inspection, should it appear that there is an isolated area that is not representative of the lot based on a lack of observed compactive effort, excessive segregation or any other questionable practice, that area may be isolated and tested separately. An area so isolated that has a calculated pay factor below 0.80, based on three random tests shall be removed and replaced at the expense of the Contractor for the full lane width and a length not to be less than 50 m [150 ft].

Pavement Density The Department will measure pavement density using core samples tested according to AASHTO T-166. The Department will randomly determine core locations. The Contractor shall cut 6 inch diameter cores at no additional cost to the Department by the end of the working day following the day the pavement is placed, and immediately give them to the Department. The cores will be placed in a transport container provided by the Department and transported by the Contractor to the designated MDOT Lab as directed by the Department. Pre-testing of the cores will not be allowed. At the time of sampling, the Contractor and the Department shall mutually determine if a core is damaged. If it is determined that the core(s) is damaged, the Contractor shall cut new core(s) at the same offset and within 1 m [3 ft] of the initial sample. At the time the core is cut, the Contractor and the Department will mutually determine if saw cutting of the core is needed, and will mark the core at the point where sawing is needed. The core may be saw cut by the Contractor in the Department's presence onsite, or in an MDOT Lab by The Department, without disturbing the layer being tested to remove lower layers of Hot Mix Asphalt Pavement, gravel, or RAP. No recuts are allowed at a test location after the core has been tested. Upon conclusion of each lot, density results shall be examined for statistical outliers as stated in Section 106.7.2.

On all sections of overlay with wearing courses designed to be 19 mm [3/4 in] or less in thickness, there shall be no pay adjustment for density otherwise noted in Section 403 - Hot Bituminous Pavement. For overlays designed to be 19 mm [3/4 in] or less in thickness, density shall be obtained by the same rolling train and methods as used on mainline travelway surface courses with a pay adjustments for density, unless otherwise directed by the Department.

There shall be no pay adjustment for density on shoulders unless otherwise noted in Section 403 - Hot Bituminous Pavement. Density for shoulders shall be obtained by the same rolling train and methods as used on mainline travelway, unless otherwise directed by the Department. Efforts to obtain optimum compaction will not be waived by the Department unless it is apparent during construction that local conditions make densification to this point detrimental to the finished pavement surface course.

401.201 Method A Lot Size will be the entire production per JMF for the project, or if so agreed at the Pre-paving Conference, equal lots of up to 4500 Mg [4500 tons], with unanticipated over-runs of up to 1500 Mg [1500 ton] rolled into the last lot. Sublot sizes shall be 750 Mg [750 ton] for mixture properties, 500 Mg [500 ton] for base or binder densities and 250 Mg [250 ton] for surface densities. The minimum number of sublots for mixture properties shall be 4, and the minimum number of sublots for density shall be five.

TABLE 5: METHOD A ACCEPTANCE LIMITS

Property	USL and LSL
Passing 4.75 mm and larger sieves	Target +/-7%
Passing 2.36 mm to 1.18 mm sieves	Target +/-4%
Passing 0.60 mm	Target +/-3%
Passing 0.30 mm to 0.075 mm sieve	Target +/-2%
PGAB Content	Target +/-0.4%
Air Voids	4.0% +/-1.5%
Fines to Effective Binder	0.6 to 1.2
Voids in the Mineral Aggregate	LSL Only from Table 1
Voids Filled with Binder	Table 1 values plus a 4% production tolerance for USL only
% TMD (In place density)	95.0% +/- 2.5%

401.202 Method B Lot Size will be the entire production per JMF for the project and shall be divided into 3 equal sublots for Mixture Properties and 3 equal sublots for density.

TABLE 6: METHOD B ACCEPTANCE LIMITS

Property	USL and LSL
Percent Passing 4.75 mm and larger sieves	Target +/-7
Percent Passing 2.36 mm to 1.18 mm sieves	Target +/-5
Percent Passing 0.60 mm	Target +/-4
Percent Passing 0.30 mm to 0.075 mm sieve	Target +/-3
PGAB Content	Target +/-0.5
Air Voids	4.0% +/-2.0
Fines to Effective Binder	0.6 to 1.4
Voids in the Mineral Aggregate	LSL from Table 1
Voids Filled with Binder	Table1 plus a 4% production tolerance for USL.
% TMD (In-place Density)	95.0% +/- 2.5%

401.203 Testing Method C Lot Size will be the entire production per JMF for the project, or if so agreed at the Pre-paving Conference, equal lots of up to 4500 Mg [4500 tons], with unanticipated over-runs of up to 1500 Mg [1500 ton] rolled into the last lot. Sublot sizes shall be 750 Mg [750 ton] for mixture properties, 500 Mg [500 ton] for base or binder densities and 250 Mg [250 ton] for surface densities. The minimum number of sublots for mixture properties shall be 4, and the minimum number of sublots for density shall be five.

TABLE 7: METHOD C ACCEPTANCE LIMITS

Property	USL and LSL
Passing 4.75 mm and larger sieves	Target +/-7%
Passing 2.36 mm to 1.18 mm sieves	Target +/-5%
Passing 0.60 mm	Target +/-4%
Passing 0.30 mm to 0.075 mm sieve	Target +/-2%
PGAB Content	Target +/-0.4%
Air Voids	4.0% +/-1.5%
Fines to Effective Binder	0.6 to 1.2
Voids in the Mineral Aggregate	LSL Only from Table 1
Voids Filled with Binder	Table 1 values plus a 4% production tolerance for USL only
% TMD (In place density)	95.0% +/- 2.5%

401.204 Testing Method D For hot mix asphalt items designated as Method D in Section 403 - Hot Bituminous Pavement, one sample will be taken from the paver hopper or the truck body per 250 Mg [250 ton] per pay item. The mix will be tested for gradation and PGAB content. Disputes will not be allowed. If the mix is within the tolerances listed in Table 8: Method D Acceptance Limits, the Department will pay the contract unit price. If the test results for each 250 Mg [250 ton] increment are outside these limits, the following deductions (Table 8b) shall apply to the HMA quantity represented by the test.

TABLE 8: METHOD D ACCEPTANCE LIMITS

Property	USL and LSL
Percent Passing 4.75 mm and larger sieves	Target +/-7
Percent Passing 2.36 mm to 1.18 mm sieves	Target +/-5
Percent Passing 0.60 mm	Target +/-4
Percent Passing 0.30 mm to 0.075 mm sieve	Target +/-3
PGAB Content	Target +/-0.5
% TMD (In-place Density)	95.0% +/- 2.5%

TABLE 8b Method "D" Price Adjustments

PGAB Content	-5%
2.36 mm sieve	-2%
0.30 mm sieve	-1%
0.075 mm sieve	-2%
Density	-10%*

*Only applies when called for in Section 403 - Hot Bituminous Pavement. Contractor shall cut two 150 mm [6 in] cores, which shall be tested for percent TMD per AASHTO T-269. If the average for the two tests falls below 92.5% the disincentive shall apply.

401.21 Method of Measurement The Department will measure Hot Mix Asphalt Pavement by the Mg [ton] in accordance with Section 108.1 - Measurement of Quantities for Payment.

401.22 Basis of Payment The Department will pay for the work, in place and accepted, in accordance with the applicable sections of this Section, for each type of HMA specified.

The Department will pay for the work specified in Section 401.11, for the HMA used, except that cleaning objectionable material from the pavement and furnishing and applying bituminous material to joints and contact surfaces is incidental.

Payment for this work under the appropriate pay items shall be full compensation for all labor, equipment, materials, and incidentals necessary to meet all related contract requirements, including design of the JMF, implementation of the QCP, obtaining core samples, transporting cores and samples, filling core holes, applying emulsified asphalt to joints, and providing testing facilities and equipment.

The Department will make a pay adjustment for quality as specified below.

401.221 Pay Adjustment The Department will sample, test, and evaluate Hot Mix Asphalt Pavement in accordance with Section 106 - Quality and Section 401.20 - Acceptance, of this Specification.

401.222 Pay Factor (PF) The Department will use the following criteria for pay adjustment using the pay adjustment factors under Section 106.7 - Quality Level Analysis:

Density If the pay factor for Density falls below 0.80 for Method A or C or 0.86 for Method B, all of the cores will be randomly recut by Sublot. A new pay factor will be calculated that combines all initial and retest results. If the resulting pay factor is below 0.80 for Method A or C or below 0.86 for Method B, the entire Lot shall be removed and replaced with material meeting the specifications at no additional cost to the Department, except that the Department may, when it appears that there is a distinct pattern of defective material, isolate any defective material by investigating each mix sample sublot and require removal of defective mix sample sublots only, leaving any acceptable material in place if it is found to be free of defective material. Pay factors equal to or greater than the reject level will be paid accordingly.

Gradation For HMA evaluated under Acceptance Method A or B, the Department will determine a composite pay factor (CPF) using applicable price adjustment factors "f" from Table 9: Table of Gradation Composite "f" Factors, and Acceptance limits from Table 5: Method A Acceptance Limits, for Method A or Table 6: Method B Acceptance Limits, for Method B. The Department will not make price adjustments for gradation on Methods A and B, but will monitor them as shutdown criteria.

TABLE 9: TABLE OF GRADATION COMPOSITE " f " FACTORS
(Methods A and B)

Constituent		"f" Factor			
		19 mm	12.5 mm	9.5 mm	4.75 mm
Gradation	25 mm	-	-	-	-
	19 mm	4	-	-	-
	12.5 mm		4	4	-
	9.50 mm				4
	2.36 mm	6	6	6	8
	1.18 mm				
	0.60 mm	2	2	2	2
	0.30 mm	2	2	2	2
	0.075 mm	6	6	6	8

For HMA evaluated under Acceptance Method C, the Department will determine a pay factor using acceptance limits from Table **7**: Method C Acceptance Limits.

VMA, Air Voids, VFB and Fines to Effective Binder The Department will determine a pay factor (PF) using the applicable Acceptance Limits.

The following variables will be used for pay adjustment:

PA = Pay Adjustment
Q = Quantity represented by PF in Mg [ton]
P = Contract price per Mg [ton]
PF = Pay Factor

Pay Adjustment Method A

The Department will use the following criteria for pay adjustment: density, Performance Graded Asphalt Binder content, voids @N_d, VMA, VFB, F/B_{eff}, and the screen sizes listed in Table 9 for the type of HMA represented in the JMF. If any single pay factor for PGAB Content, VMA, or Air Voids falls below 0.80, then the composite pay factor for PGAB Content, VMA, and Air Voids shall be 0.55.

Density: For mixes having a density requirement, the Department will determine a pay factor using Table 5: Method A Acceptance Limits:

PA = (density PF- 1.0)(Q)(P)x0.50

PGAB Content, VMA and Air Voids: The Department will determine a pay adjustment using Table 5: Method A Acceptance Limits as follows:

PA = (voids @ N_d PF- 1.0)(Q)(P)x0.20 + (VMA @ N_d PF- 1.0)(Q)(P)x0.20 + (PGAB PF- 1.0)(Q)(P)x0.10

VFB and Fines to Effective Binder The Department will determine a pay factor (PF) using Table 5: Method A Acceptance Limits. The Department will not make price adjustments for VFB or Fines to Effective Binder, but will monitor them as shutdown criteria.

Pay Adjustment Method B

The Department will use the following criteria for pay adjustment: density, Performance Graded Asphalt Binder content, voids @N_d, VMA, VFB, F/B_{eff}, and the screen sizes listed in Table 9 for the type of HMA represented in the JMF. If any single pay factor for PGAB Content, VMA, or Air Voids falls below 0.86, then the composite pay factor for PGAB Content, VMA, and Air Voids shall be 0.70.

Density: For mixes having a density requirement, the Department will determine a pay factor using Table 6: Method B Acceptance Limits:

PA = (density PF- 1.0)(Q)(P)x0.50

PGAB Content, VMA and Air Voids: The Department will determine a pay adjustment using Table 6: Method B Acceptance Limits as follows:

PA = (voids @ N_d PF- 1.0)(Q)(P)x0.20 + (VMA @ N_d PF- 1.0)(Q)(P)x0.20 + (PGAB PF- 1.0)(Q)(P)x0.10

VFB and Fines to Effective Binder The Department will determine a pay factor (PF) using Table 6: Method B Acceptance Limits. The Department will not make price adjustments for VFB or Fines to Effective Binder, but will monitor them as shutdown criteria.

Pay Adjustment Method C

The Department will use density, Performance Graded Asphalt Binder content, and the percent passing the nominal maximum, 2.36 mm, 0.300 mm and 0.075 mm sieves for the type of HMA represented in the JMF. If the PGAB content falls below 0.80, then the PGAB pay factor shall be 0.55.

Density: For mixes having a density requirement, the Department will determine a pay factor using Table 7: Method C Acceptance Limits:

PA = (density PF- 1.0)(Q)(P)x0.50

PGAB Content and Gradation The Department will determine a pay factor using Table **7**: Method C Acceptance Limits. The Department will calculate the price adjustment for Mixture Properties as follows:

PA = (% Passing Nom. Max PF-1.0)(Q)(P)X0.05+(% passing 2.36 mm PF-1.0)(Q)(P)X0.05+(%passing 0.30 mm PF-1.0)(Q)(P)X0.05+(%passing 0.075 mm PF-1.0)(Q)(P)X0.10+(PGAB PF-1.0)(Q)(P)X0.25

VMA, Air Voids, VFB and Fines to Effective Binder The Department will determine a pay factor (PF) using Table 7: Method C Acceptance Limits. The Department will not make price adjustments for VMA, Air Voids, VFB or Fines to Effective Binder, but will monitor them as shutdown criteria.

Pay Adjustment Method D

The Department will use density, Performance Graded Asphalt Binder content, and the screen sizes listed in Table 8b for the type of HMA represented in the JMF. If test results do not meet the Table 8 requirements, deducts as shown in Table 8b shall be applied to the quantity of mix represented by the test.

401.223 Process for Dispute Resolution (Methods A B & C only)

a. Dispute Resolution sampling At the time of Hot-Mix Asphalt sampling, the Department will obtain a split sample of each Acceptance test random sample for possible dispute resolution testing. The Contractor shall also obtain a split sample of the HMA at this same time. If the Contractor wishes to retain the option of requesting dispute testing of the initial Acceptance sample, the Contractor will test their split of the

Acceptance sample and shall report their results to the Resident, with a copy to the QA Engineer at the Central Laboratory in Bangor by 7:00 AM, on the second working day from time of QA sampling, otherwise dispute resolution will not be initiated. The Department's dispute resolution split sample will be properly labeled and stored for a period of not more than two weeks, or until the sample is tested.

b. Disputing Acceptance results The Contractor may dispute the Department's Acceptance results and request (Methods A, B, & C) that the dispute resolution split sample be tested by notifying the Department's Resident and the QA Engineer at the Central Laboratory in Bangor in writing within two working days after receiving the results of the Acceptance test. The following shall be provided in the request:

- Acceptance sample reference number
- The specific test result(s) or property(ies) being disputed, and
- The complete, signed report of the Contractor's testing (In a lab certified by the NETTCP and MDOT) of their split of the Acceptance sample indicating that the variances in Table10: Dispute Resolution Variance Limits, for the specific test result(s) or property(ies) were exceeded.

c. Disputable items The Contractor may dispute any or all of the following Method A or B test results when the difference between the Department's value and the Contractor's value for that test equals or exceeds the corresponding allowable variation in Table 10: Dispute Resolution Variance Limits, PGAB content, G_{mb}, and G_{mm}. In addition, if the allowable variation for these tests is not met or exceeded, the Contractor may dispute either or both of the following material properties provided the difference between results for them equals or exceeds the corresponding allowable variation in Table 10: Voids at N_{design}, and VMA.
For Method C only: The results for PGAB content and the screen sizes used for pay adjustment may be disputed.

d. Outcome The value of any disputed result or property reported for the initial Acceptance sample shall stand if the value reported for the dispute resolution sample is not closer to the value the Contractor reported for their split sample than to the value reported for the initial Acceptance sample. If the value reported for the dispute resolution falls precisely half-way between the other two values the value reported for the dispute resolution will replace the original acceptance value. Otherwise, the value reported for the dispute resolution sample will replace the value reported for the initial Acceptance sample, and will be used to re-calculate any other affected results or properties.

TABLE 10: DISPUTE RESOLUTION VARIANCE LIMITS

PGAB Content	+/-0.4%
G_{mb}	+/-0.030
G_{mm}	+/-0.020
Voids @ N_d	+/-0.8%
VMA	+/-0.8%
Passing 4.75 mm and larger sieves	+/- 4.0%
Passing 2.36 mm to 0.60 mm sieves	+/- 3.0%
Passing 0.30 mm to 0.15	+/- 2.0 %
0.075 mm sieve	+/- 1.0%

SECTION 402 - PAVEMENT SMOOTHNESS

402.00 Smoothness Projects Projects to have their pavement smoothness analyzed in accordance with this Specification will be so noted in Special Provision 403 - Bituminous Box

402.01 Pavement Smoothness The final pavement surface shall be evaluated for smoothness using a Class I or Class II profiler as defined by ASTM E950 (94). Smoothness measurements will be expressed in terms of the International Roughness Index (IRI) as defined by the World Bank, in units of inches/mile.

402.02 Lot Size Lot size for smoothness will be 1000 lane-meters [3000 lane-feet]. A sublot will consist of 20 lane-meters [50 lane-feet]. Partial lots will be included in the previous lot if less than one-half the size of a normal lot. If equal to or greater than one-half the normal lot size, it will be tested as a separate lot.

402.03 Acceptance Testing The Department will conduct Acceptance testing following completion of the surface course. Sections to be excluded from testing include the following:

Bridge decks and joints (no smoothness measurements will be taken within 30 m [100 ft] of bridge joints)
Acceleration and deceleration lanes
Shoulders and ramps
Side streets and roads
Within 30 m [100 ft] of transverse joints at the beginning and end of the project
Within 30 m [100 ft] of railroad crossings
Urban areas with speed limits of 50 kph [30 mph] or lower

Each lot shall have 2 measurements made in each wheel path. The average of the 4 measurements will determine the smoothness for that lot.

The smoothness measurements will be statistically evaluated for pay factors as described in Subsection 106.7 - Quality Level Analysis, using the specification limits shown below.

ACCEPTANCE LIMITS

Level	USL
I	0.95 m/km [60 in/mile]
II	1.10 m/km [70 in/mile]
III	1.25 m/km [80 in/mile]

Computation of Smoothness Pay Adjustment:

PA = (PF-1.0)(Q)(P)
where:
Q = Quantity of surface course in the Lot (excluding shoulders, side streets, bridge decks, ramps, acceleration and deceleration lanes)
PF = smoothness pay factor for the Lot
P = Contract unit price for surface pavement
PA = pay adjustment

402.04 Unacceptable Work In the event that any Lot is found to have a pay factor less than 0.80, the Contractor shall take whatever remedial action is required to correct the pavement surface in that Lot at no additional expense to the Department. Such remedial action may include but is not limited to removal and replacement of the unacceptable pavement. In the event remedial action is necessary, the Contractor shall

submit a written plan to the Resident outlining the scope of the remedial work. The Resident must approve this plan before the remedial work can begin. Following remedial work, the Lot shall be retested, and will be subject to the specification limits listed above. The resulting pay factor, if within the acceptable range, will be used in the final pay adjustment. The Contractor shall pay the cost of retesting the pavement following corrective action.

Localized surface tolerance defects will be subject to the provisions outlined in Section 401.101 Surface Tolerances.

Payment will be made under:

Pay Item	Pay Unit
402.10 Incentive/Disincentive - Pavement Smoothness	Lump Sum

SECTION 403 - HOT BITUMINOUS PAVEMENT

403.01 Description This work shall consist of constructing one or more courses of bituminous pavement on an approved base in accordance with these specifications, and in reasonably close conformity with the lines, grades, thickness and typical cross sections shown on the plans or established.

The bituminous pavement shall be composed of a mixture of aggregate, filler if required, and bituminous material.

403.02 General The materials and their use shall conform to the requirements of Section 401 - Hot Mix Asphalt Pavement.

403.03 Construction The construction requirements shall be as specified in Section 401 - Hot Mix Asphalt Pavement.

In addition, hot bituminous pavement placed on bridges shall also conform to the following requirements.

a. The mixture shall be composed of aggregate, PGAB and mineral filler but no recycled asphalt pavement and placed in courses as specified in the Special Provisions.

b. The bottom course shall be placed with an approved rubber mounted bituminous paver of such type and operated in such a manner that the membrane waterproofing will not be damaged in any way.

c. The top course shall not be placed until the bottom course has cooled sufficiently to provide stability.

d. The Contractor will not be required to cut sample cores from the compacted pavement on the bridge deck.

e. After the top course has been placed, the shoulder areas shall be sealed 1 meter [3 ft] wide with two applications of an emulsified bituminous sealer meeting the requirements of Section 702.12 - Emulsified Bituminous Sealing Compound. The first application shall be pre-mixed with fine, sharp sand, similar to mortar sand, as needed to fill all voids in the mix in the area being sealed. The second application may be applied without sand. The sealer shall be carried to the curb at the gutter line in sufficient quantity to leave a bead or fillet of material at the face of the curb. The area to be sealed shall be clean, dry and the surface shall be at ambient temperature.

f. The furnishing and applying of the required quantity of sealer for the bridge shoulder areas shall be incidental to placing the hot bituminous pavement.

g. The atmospheric temperature for all courses on bridge decks shall be 10°C [50°F] or higher.

403.04 Method of Measurement Hot bituminous pavement will be measured as specified in Section 401.21-Method of Measurement.

403.05 Basis of Payment The accepted quantities of hot bituminous pavement will be paid for at the contract unit price per Megagram [ton] for the bituminous mixtures, including bituminous material complete in place.

Method A, Method B, Method C and Method D shall be used for acceptance as specified in Section 401 - Hot Mix Asphalt Pavements. (See Complementary Notes, Section 403 - Hot Bituminous Pavement, for Method location).

Payment will be made under:

Pay Item		Pay Unit
403.102	Hot Mix Asphalt Pavement for Special Areas	MG [Ton]
403.206	Hot Mix Asphalt, 25 mm Nominal Maximum Size	MG [Ton]
403.207	Hot Mix Asphalt, 19.0 mm Nominal Maximum Size	MG [Ton]
403.208	Hot Mix Asphalt, 12.5 mm Nominal Maximum Size	MG [Ton]
403.209	Hot Mix Asphalt, 9.5 mm Nominal Maximum Size (sidewalks, drives, islands & incidentals)	MG [Ton]
403.210	Hot Mix Asphalt, 9.5 mm Nominal Maximum Size	MG [Ton]
403.211	Hot Mix Asphalt (shimming)	MG [Ton]
403.212	Hot Mix Asphalt, 4.75 mm Nominal Maximum Size	MG [Ton]
403.213	Hot Mix Asphalt, 12.5 mm Nominal Maximum Size, Base	MG [Ton]

SPECIAL PROVISION
SECTION 403
HOT MIX ASPHALT

Desc. Of Course	Grad Design.	Item Number	Bit Cont. % of Mix	Total Thick	No. Of Layers	Comp. Notes
Bridge Deck						
Wearing	9.5 mm	403.210	N/A	1.5 in	1	1,2,4,8
Base	9.5 mm	403.210	N/A	1.5 in	1	1,2,4,8
Travel Way & Shoulders - Approach Areas						
Wearing	9.5 mm	403.210	N/A	1.5 in	1	4,8,12
Binder	9.5 mm	403.210	N/A	1.5 in	1	4,8,12
Base	12.5 mm	403.213	N/A	3.0 in	2	4,8
Sidewalks, Drives, Islands & Incidentals						
Wearing	9.5 mm	403.209	N/A	2 in	2/more	2,3,10,13

COMPLEMENTARY NOTES

1. The use of Recycled Asphalt Pavement (RAP) will not be permitted.
2. The density requirements are waived. In addition, the use of an oscillating steel roller shall be required to compact all HMA pavements placed on bridge decks.
3. The design traffic level for mix placed shall be <0.3 million ESALS.
4. The design traffic level for mix placed shall be 0.3 to <3 million ESALS. The design, verification, Quality Control, and Acceptance tests for this mix will be performed at **50 gyrations.**
8. Section 106.6 Acceptance, (2) Method B.
10. Section 106.6 Acceptance, (2) Method D.
12. A mixture meeting the gradation of 12.5 mm hot mix asphalt may be used at the option of the contractor.
13. A mixture meeting the requirements of section 703.09 Grading 'D', with a minimum PGAB content of 6%, and the limits of Special Provision 401, Table 9 (Drives and Sidewalks) for PGAB content and gradation may be substituted for this item. A job mix formula shall be submitted to the department for approval.

Tack Coat

A tack coat of emulsified asphalt, RS-1, Item 409.15 shall be applied to any existing pavement at a rate of approximately 0.025 gal/yd², and on milled pavement approximately 0.05 gal/yd², prior to placing a new course. A fog coat of emulsified asphalt shall be applied between shim / intermediate course and the surface course, at a rate not to exceed 0.025 gal/yd².

Tack used between layers of pavement will be paid for at the contract unit price for Item 409.15 Bituminous Tack Coat.

SPECIAL PROVISION
SECTION 501
FOUNDATION PILES
(Sheet Pile)

501.01 Description. This work shall consist of furnishing and driving steel sheet pile of the types and dimensions specified on the contract plans and/or as specified within this specification, to the required elevation or refusal. Sheet piles shall conform to and be installed, as detailed in these specifications, in reasonably close conformity to the lines, grades, and locations shown on the plans or as authorized by the Resident.

501.02 Submittals.

A. Shop Drawings: Submit drawings for approval prior to start of the work or ordering materials. Include details of top protection, splices, fabricated additions to plain piles. Include method of installation, type and size of pile hammer, cut-off method, and corrosion protection. Drawings for sheet piling including fabricated sections shall show complete dimensions including details of piling and the driving schedule, sequence and location of piling. Include details and dimensions of templates and other temporary guide structures for installing the piling. Provide details of the method of handling sheet piling to prevent permanent deflection, distortion or damage to interlocks.

B. Design Calculations: The contractor shall submit a copy of the designer's calculation as part of the shop drawing submittal. Design calculations that consist of computer generated output shall be supplemented with at least one hand calculation and graphic demonstrating the design methodology used. Design calculations shall provide thorough documentation of the sources of equations used and material properties.

C. Records: Pile driving records

D. Certificates: Material certificates including chemical and physical test results.

501.03 Materials.

A. Sheet piles shall be hot-rolled steel meeting the chemical and mechanical requirements of ASTM A 572 Grade 50. The interlock of sheet piling shall be free-sliding, and maintain continuous interlocking when installed. Sheet piling including special fabricated sections shall be full-length sections of the dimensions shown. Fabricated sections shall conform to the requirements herein and the piling manufacturer's recommendations for fabricated sections. Provide sheet piling with standard pulling holes. Any metalwork fabrication for sheet pile sections shall conform to the

requirements of Section 504, Structural Steel. Provide cast steel sheet pile protectors, in one-piece Z configuration, at the bottom of each pile.

B. Sheet Pile Connectors – Where sheet pile changes direction, connectors shall be equivalent to those manufactured by PilePro LLC or Skyline Steel LLC or LB Foster Company. Connectors shall be of the same material as the sheet pile.

C. Certification: Contractor shall certify that all component materials, manufacturing operations, and/or furnished products conform to all MaineDOT requirements pertinent to the project plans, special provisions and specifications for the contract items indicated.

501.04 Design Requirements The sheet pile system shall be designed in accordance with the following:

A. The sheet pile wall system shall be designed in accordance with the AASHTO Standard Specifications for Highway Bridges, 17th Edition, 2002 with interims (ASD design), or the current edition of AASHTO LRFD Bridge Design Specifications (LRFD design.

B. The contractor shall submit design calculations as described in section 501.02, Submittals.

C. The contractor shall perform a wave equation analysis for review and acceptance by the Project Geotechnical Engineer. The analysis shall consider the proposed driving equipment. The contractor must limit pile driving stresses to allowable levels of less than 0.9 F_y. Ultimate pile capacity will not be a consideration for equipment acceptance.

D. The Contract Plans.

E. The requirements specified herein.

F. The manufacturer's requirements.

501.04 Construction Methods.

A. Earthwork

1. Any excavation and backfill shall be performed in accordance with Section 203 Excavation and Embankment

2. Obstructions encountered in pile locations shall be dealt with as follows:

a. All rocks, timbers, or other obstructions within 5 feet of the existing ground surface which interfere with pile advance shall be removed. Excavation and removal of obstructions shall be paid for under pay item 203.20 Common Excavation.

b. In the case of an apparent obstruction below the level in (a), but above anticipated full depth, which prevents appreciable penetration of a pile (s), the abnormal condition will receive further consideration by the Resident. Depending on depth and resistance of the obstruction, the Resident will decide whether to consider the pile (s) acceptable or order the obstruction removed. The decision may be deferred until the driving of adjacent piles indicates the obstruction to be isolated or extending over the area of several piles.

c. Jetting shall de done only with permission of the Resident and must be addressed in the Contractor's SEWPCP. When water jets are used, the number of jets and the volume and pressure of the water at the nozzle shall be sufficient to erode freely the material adjacent to the piles. The plant shall have sufficient capacity to deliver at all times at least 100 psi pressure at two ¾ inch jet nozzles. Before the design penetration is reached, the jets shall be withdrawn and the piles shall be driven with the hammer to the required penetration or bearing capacity.

d. Preaugering: When necessary to obtain the specified pile penetration and when authorized by the Resident, the Contractor shall furnish the necessary drilling apparatus and drill holes, not greater then the least dimension of the pile top, to the proper depth and drive the piles therein. When specified in the contract documents, the Contractor shall prebore holes at pile locations and to the depths shown on the plans. Preaugered holes shall be of a size smaller than the diameter of diagonal of the pile cross section. If subsurface obstructions, such as boulder or rock layers are encountered, the hole diameter may be increased to the least dimension needed for pile installation. Any void space remaining around any type pile after driving shall be completely filled with sand or other approved material. The use of spuds, which are driven and removed to make a hole for inserting a pile, shall not be permitted in lieu of preboring.

B. Installation

1. Pile Hammer

For steel sheet piles, both a vibratory and an impact hammer shall be available to the Contractor to install the sheet piles. Use a pile hammer having a delivered force or energy suitable for the total weight of the pile and the character of subsurface material to be encountered. Operate hammer at the rate (s) recommended by the manufacturer throughout the entire driving period. Repair damage to piling caused by use of a pile hammer with excess delivered force or energy.

2. Pile Protection

   Use a protective cap during driving to prevent damage to the top of the piles.

3. Templates for Sheet Piles

   Prior to driving, provide template or driving frame suitable for aligning, supporting, and maintaining sheet piling in the correct position during setting and driving. Use a system of structural framing sufficiently rigid to resist lateral and driving forces and to adequately support the sheet piling until design tip elevation is achieved. The template or driving frame shall provide at least two levels of support for the sheet piling above the ground surface, one at a level on the sheeting corresponding to a distance one-third of the total sheet pile length, and the second at a point on the sheet a distance of two-thirds of the total sheet pile length. Templates shall not move when supporting sheet piling. Fit templates with wood blocking to bear against the web of each alternate sheet pile and hold the sheet pile at the design location alignment. Provide outer template straps or other restraints as necessary to prevent the sheets from warping or wandering from the alignment. Mark template for the location of the leading edge of each alternate sheet pile. If in view, also mark the second level to assure to that the piles are vertical and in position. If two guide marks cannot be seen, other means must be used to keep the sheet pile vertical along its leading edge.

4. Pile Driving

   Drive sheet pile to the indicated tip elevations. Maintain piling vertical during driving. Drive piles in such a manner as to prevent damage to the piles and to provide a continuous closure.

   Where possible for sheet piles, drive Z-pile with the ball end leading. If an open socket is leading, a bolt or similar object placed in the bottom of the interlock will minimize packing material into it and ease driving for the next sheet. Incrementally sequence the driving of individual piles such that the tip of any sheet pile shall not be more than 4 feet below that of any adjacent sheet pile.

Piles that have heaved more than ¼ inch during the driving of other piling shall be reseated to the required penetration or bearing capacity at the Contractor's expense.

5. Cutting and Splicing

Piles driven to refusal or the point where additional penetration cannot be attained and are extending above the required top elevation in excess of the specified tolerance shall be cut off to the required elevation. Piles driven below the required top elevation and piles damaged by driving and cut off to permit further driving shall be extended as required to reach the top elevation by splicing when directed by the Resident. One splice per pile will be permitted. Piles adjoining spliced piles shall be full length unless otherwise approved. Welding of splices shall conform to the requirements of Section 504, Structural Steel. Ends of piles to be spliced shall be squared before splicing to eliminate dips or camber. Splice piles with concentric alignment of the interlocks so that there are no discontinuities, dips or camber at the abutting interlocks. Spliced piles shall be free sliding and able to obtain the maximum swing with contiguous piles. Trim the tops of piles excessively battered during driving, when directed at no cost. Use a straight edge in cutting by burning to avoid abrupt nicks. Bolt holes shall be drilled or may be burned and reamed by approved methods which will not damage the surrounding metal. Holes other than bolt holes shall be smooth and the proper size for rods or other items to be inserted. Do not use explosives for cutting.

6. Welding

Shop and field welding, qualifications of welding procedures, welders, and welding operators shall be in accordance with AWS D1.1.

7. Tolerances in Driving

<u>Sheet Piles</u>
Drive all piles with a variation from vertical of not more than ¼ inch per foot. Place the pile so the face will not be more than 6 inches from vertical alignment at any point over the entire length of the earth retention system. Top of pile at elevation of cut-off shall be within 2 in. horizontally and 2 in. vertically of the location indicated. Manipulation of piles to force them into position will not be permitted. Check all piles for heave. Redrive all heaved piles to the required tip elevation.

C. Inspection

Perform continuous inspection during pile driving by frequent optical surveying of the pile alignment relative to an established reference base line. Inspect all piles for compliance with tolerance requirements regarding horizontal and vertical alignment. Bring any unusual problems which may occur to the attention of the Resident.

1. Inspection of Driven Piling

   The Contractor shall inspect the interlocks of the portion of driven sheet piles that extend above ground. Remove and replace piles found to be out of interlock.

2. Pulling and Redriving

   The Contractor may be required to pull selected piles after driving to bring into location tolerance, or to determine the condition of the underground portions of piles. The pile pulling method must be approved by the Resident. Remove and replace at the Contractor's expense any pile pulled and found to be damaged to the extent that its usefulness in the structure is impaired. Redrive piles pulled and found to be in satisfactory condition.

3. Installation Records

   Maintain a pile driving record for each pile. Indicate on the installation record installation dates and times, type and size of hammer, rate of operation, total driving time, dimensions of driving helmet and cap used, blows or time required per foot for each foot of penetration, driving resistance in blows for final 6 in. of penetration, pile locations, tip elevations, ground elevations, and cut-off elevations. Record any unusual pile driving problems. Submit complete records to the Resident.

<u>501.05 Defective Pile and Corrective Measures</u> The procedure incident to the driving of pile shall not subject the piles to excessive and undue abuse causing deformation. Any pile damaged due to internal defects, improper driving, or driven below cutoff elevation shall be consider defective and shall be corrected by and at the expense of the Contractor by a method approved by the Resident.

<u>501.06</u> <u>Driven Pile Capacity, Pile Testing, and Acceptance</u> Pile testing and acceptance shall be done in accordance with Maine DOT Standard Specification subsection 501.07

<u>501.06 Method of Measurement</u>. Steel sheet piling will be measured for payment as one lump sum unit completed in place.

501.07 Basis of Payment. Steel sheet piling will be paid for at the contract lump sum price, furnished, and complete in place. The price shall be full compensation for furnishing, transporting, storing, handling, placing or erecting the material specified including installing sheet piles and all related hardware, installation and removal of any temporary bracing, installation and removal of pile driving template, removal and disposal of any obstructions, and any pile testing as specified by the plans and described in these specifications.

Full compensation for all jetting, drilling, providing special driving tips or heavier sections for steel piles or other work necessary to obtain the specified penetration and bearing value of the piles, for drilling holes through embankment and filling the space remaining around the pile with sand or pea gravel, and for disposing of material resulting from drilling holes, as specified in the specification and the special provision and as direct by the Resident shall be considered as included in the contract lump sum price paid for steel sheet piling and no additional compensation will be allowed therefore.

Payment will be made under:

Pay Item		Pay Unit
501.301	Steel Sheet Piling	LS

SPECIAL PROVISION
SECTION 502
STRUCTURAL CONCRETE
(QC/QA Acceptance Methods)

CLASS OF CONCRETE	ITEM NUMBER	DESCRIPTION	P	METHOD
A	502.219	Structural Concrete, Abutments and Retaining Walls	$400	A
A	502.239	Structural Concrete Piers	$400	A
S	502.24	Structural Concrete Piers (Placed Under Water)	-	C
A	502.26	Structural Concrete Roadway and Sidewalk Slab on Steel Bridge	$400	A
A	502.31	Structural Concrete Approach Slabs	-	C
A	502.452	Structural Concrete Distribution Slabs	$400	A
LP	502.48	Low Permeability Concrete	$425	A
Fill	502.56	Concrete Fill	-	C
LP	526.34	Permanent Concrete Transition Barrier	$425	A

P values listed above reflect the price per cubic yard (yd^3) for all pay adjustment purposes.

Special Provision
Section 502.72
Fiber Reinforced Polymer Bridge Drains

Description: This work shall consist of fabrication and delivery of fiber reinforced polymer bridge drains in accordance with plans and specifications.

Company Experience: The supplier shall demonstrate successful experience producing FRP drainage products and related components that have been in service for a minimum of 3 years.

For local FRP manufacturers please contact:
Steve Von Vogt, Executive Director
Maine Composites Alliance
P.O. Box 129
Portland, ME 04112
svonvogt@mainecompositesalliance.org
(207) 828-1414

Materials and Fabrication Requirements: The Contractor will submit fabrication details to the Resident Engineer for review. The Resident will be allowed 7 working days to review the submittal. Details shall be in accordance with these specifications and the latest standard details for standard bridge drain. All material and workmanship will meet or exceed ASTM C 582. The following is specified:
3/8” thick scupper and downspout
8” inside diameter downspout
1.5” x 0.25” H.D. Galvanized bar grating – AASHTO HS25 rated
Galvanized grating clips and hardware
Galvanized U-bolt and support angle
#5 rebar tab welded to the scupper for securing drain in place
Chemical resistant Derakane 510C-350 Resin or equal to be used throughout
Corrosion Barrier shall be 1 layer of Nexus (Burlington Industries) 100-10 surfacing veil followed by 4 layers .75 oz/sqft chopped strand mat (Owens Corning Vetrotex), or approved equal. Structural portion shall be alternating plies of 1.5 oz/sqft chopped strand mat and 24 oz/sqyd woven roving to the required thickness.

Installation: FRP drains shall be stored and handled in accordance with the manufacturer’s recommendations. FRP Bridge Drains will be accurately placed at the locations shown on the Plans or authorized, and adequate means provided for securely holding them in place during the placing of concrete. Any repairs to the drains as a result of mishandling shall be done at the expense of the contractor.

Method of Measurement: FRP Bridge Drains will be measured by the number of units, for fabrication and delivery. Installation of the drains will be incidental to the Structural Concrete Superstructure item.

Basis of Payment: FRP Bridge Drains will be paid for at the contract unit price. Such payment will include compensation for the fabrication and delivery of the drains in accordance with this specification.

Payment will be made under:

Pay Item		Pay Unit
502.72	FRP Bridge Drain – Type A	Each

May 4, 2006
Supersedes September 29, 2004

SPECIAL PROVISION
SECTION 502
STRUCTURAL CONCRETE
(Quality Level Analysis)

502.01 Description In second sentence, replace "…METHOD B Small Qunatity Product Verification…" with "…METHOD B Statistical Acceptance…"

502.05 Composition and Proportioning Delete Table 1 and replace with the following;

TABLE 1- Methods A and B

Concrete CLASS	Compressive Strength (PSI)		Permeability (COULOMBS)		Entrained Air (%)		Notes
	LSL	USL	LSL	USL	LSL	USL	
S	2,900	N/A	N/A	N/A	6.0	8.5	1, 5
A	4,350	-----	-----	2,400	6.0	8.5	1,2,5,6
P	-----	-----	-----	-----	5 ½	7 ½	1,2,3,4,5
LP	5,075	-----	-----	2,000	6.0	8.5	1,2,5,6
Fill	2,900	N/A	N/A	N/A	N/A	N/A	6

502.503 Delete and replace with the following;

"502.0503 Quality Assurance METHOD B The Department will determine the acceptability of the concrete through a quality assurance program.

The Department will take Quality Assurance samples a minimum of once per sublot on a statistically random basis. Quality Assurance tests will include compressive strength, air content and permeability.

Concrete sampling for quality assurance tests will be taken at the discharge point, with pumped concrete sampling taken at the discharge end of the pump line.

Lot Size A lot size shall consist of the total quantity represented by each class of concrete in the Contract, except in the case when the same class of concrete is paid for under both lump sum items and unit price items in the Contract; in this case, the lump sum item quantities shall comprise 1 lot and the unit price item quantities shall comprise a separate lot. A lot shall consist of a minimum of 3 and a maximum of 10 sublots. If a lot is comprised of more than 10 sublots, sized in accordance with Table #3, then this quantity shall be divided equally into 2, or more, lots such that there is a minimum of 3 and a maximum of 10 sublots per lot. If there is insufficient quantity in a lot to meet the recommended minimum sublot size, then the lot shall be divided into 3 equal sublots.

Sublot Size, General The size of each sublot shall be determined in accordance with Table #3. The Resident may vary sublot sizes based on placement sizes and sequence.

Sublot Size, Unit Price Items Sublot sizes will initially be determined from estimated quantities. When the actual final quantity of concrete is determined: If there is less than one-half the estimated sublot quantity in the remaining quantity, then this quantity shall be combined with the previous sublot, and no further Acceptance testing will be performed; if there is more than one-half the estimated sublot quantity in the remaining quantity, then this quantity shall constitute the last sublot and shall be represented by Acceptance test results. If it becomes apparent part way through a lot that, due to an underrun in quantity, there will be an insufficient quantity of concrete to comprise three sublots, then the Resident may adjust the sizes of the remaining sublots and select new sample locations based on the revised estimated quantity of concrete remaining in the lot.

Sublot Size, Lump Sum Items Each lot shall be divided into sublots of equal size, based on the estimated quantity of concrete.

TABLE 3

Quantity m^3 [cy]	Recommended Sublot Size m^3 [cy]
0-400 [0-500]	40 [50]
401-800 [501-1000]	60 [75]
801-1600 [1001-2000]	80 [100]
1601 [2001]or greater	200 [250]

Determination of the concrete cover over reinforcing steel for structural concrete shall be made prior to concrete being placed in the forms. Bar supports, chairs, slab bolsters, and side form spacers shall meet the requirements of Concrete Reinforcing Steel Institute (CRSI) Manual of Standard Practice, Chapter 3 Section 2.5 Class 1, Section 2.6 Class 1A, or Section 4. All supports shall meet the requirements for type and spacing as stated in the CRSI Manual of Standard Practice, Chapter 3. Concrete will not be placed until the placing of the reinforcing steel and supports have been approved by the Resident. If the Contractor fails to secure Department approval prior to placement, the Contractor's failure shall be cause for removal and replacement at the Contractor's expense. The Contractor shall notify the Resident, at least 48 hours prior to the placement, when the reinforcing steel will be ready for checking. Sufficient time must be allowed for the checking process and any needed repairs.

Evaluation of materials will be made using the specification limits in Table 1.

Compressive strength tests will be completed by the Department in accordance with AASHTO-T22 at ≥ 28 days, except that no slump will be taken. The average of two concrete cylinders per sublot will constitute a test result and this average will be used to determine the compressive strength for pay adjustment computations.

Testing for Entrained Air in concrete, at the rate of one test per sublot, shall be in accordance with AASHTO T152.

Rapid Chloride Permeability test specimens will be completed by the Resident in accordance with AASHTO T-277 at an age ≥ 56 days. Two 100 mm x 200 mm [4 in x 8 in] cylinders will be taken per sublot placed.

Surface Tolerance, Alignment and Trueness, Plumb and Batter, and Finish will be measured as described in Section 502.0502.

Rejection by Resident For an individual sublot with a calculated pay factor of less than 0.80, the Department will, at its sole discretion:

A. Require the Contractor to remove and replace the entire affected placement with concrete meeting the Contract requirements at no additional expense to the Department, or

B. Accept the material, at a reduced payment as determined by the Department. (See also Section 502.191)

For a lot in progress, the Contractor shall discontinue operations whenever one or more of the following occurs:

A. The pay factor for any property drops below 1.00 and the Contractor is taking no corrective action

B. The pay factor for any property is less than 0.90

C. The Contractor fails to follow the QC Plan"

502.18 Method of Measurement Under Section E. make the following change from "….Method A, and under Section 502.19…" to "…Method A, Section 502.0503- Quality Assurance Method B, and under Section 502.19…"

502.19 Basis of Payment Modify the first sentence of the seventh paragraph from "…accepted under Method A." to "…accepted under Method A and Method B."

502.191 Pay Adjustment for Compressive Strength Add the following as the second sentence to the first paragraph; "Pay factors (PF) for pay adjustments for compressive strength will be determined using the Quality Level Analysis as specified in Section 106."

502.192 Pay Adjustment for Chloride Permeability Delete and replace with the following;

"Pay factors (PF) for pay adjustments for Chloride Permeability will be determined using the Quality Level Analysis as specified in Section 106.

Values greater than 4000 coulombs shall be subject to rejection and replacement at no additional cost to the Department."

502.193 Pay Adjustment for Air Content Delete and replace with the following;

"Pay factors (PF) for pay adjustments for air content will be determined using the Quality Level Analysis as specified in Section 106."

Add the following Section;

"502.195 Pay Adjustments for Compressive Strength, Chloride Permeability and Air Content The Composite Pay Factor (CPF) for each lot of concrete shall be computed as follows:

CPF = [(Compressive Strength PF-1)(0.20)] + [(Air Content PF-1)(0.40)]
+ [(Chloride Permeability PF-1)(0.40)]

The pay adjustment for each lot of concrete shall be computed as follows:

Lot Pay Adjustment = P x CPF x Lot Size

There will be no positive pay adjustments for Method B Concrete."

SECTION 506
SHOP APPLIED PROTECTIVE COATING - STEEL

506.01 Description. This work shall consist of applying protective coating to steel substrate in accordance with the Plans and this Specification.

ALL REQUIREMENTS IN THIS SPECIFICATION ARE THE RESPONSIBILITY OF THE CONTRACTOR UNLESS NOTED OTHERWISE.

506.02 Materials. Materials shall comply with the requirements of the respective Subsections of this Specification. Color for topcoat of Zinc Rich Coating System, top coated Galvanizing, top coated Thermal Spray Coating, Fusion Bonded Epoxy and Dry Powder (polyester) Coating shall be green, Federal Standard 595B Color No. 14272 unless otherwise noted. Use Federal Standard 595B, No. 20059 when brown is specified to match weathering steel.

506.03 Submittals. Submit the following:

- The manufacturers' published data sheet(s) for the specified protective coating system.
- Material Safety Data Sheets.
- The Quality Control Plan.
- The Contractor's qualifications.

506.04 General Requirements. Requirements for the protective coating/protective coating system or containment system are:

Zinc Rich Coating System	Subsections 506.10 through 506.19
Galvanizing	Subsections 506.20 through 506.29
Thermal Spray Coating	Subsections 506.30 through 506.39
Fusion Bonded Epoxy	Subsections 506.40 through 506.49
Dry Powder (Polyester) Coating	Subsections 506.50 through 506.59

506.05 Inspection. Quality Control (QC) is the responsibility of the Contractor. Inspect all aspects of the work and supervise all sampling, measurements and testing. Record measurements and test results in a clear and legible manner. Reject materials and workmanship that do not meet contract requirements. The Quality Control Inspector (QCI) may perform sampling, measurements and testing in addition to the minimum required. Make the results of all sampling, measurements and testing available to the Quality Assurance Inspector (Quality Assurance Inspector).

Quality Assurance (QA) is the prerogative of the Department-. The QAI will ensure that the QC Department is performing properly, verify documentation, periodically inspect workmanship and witness sampling, measurements and testing. The QAI will schedule measurements and testing deemed necessary by the Fabrication Engineer in addition to

the minimum requirements in a manner that minimizes interference with the production schedule.

QCI and QAI Coatings Inspection Experience:

Documented training in materials preparation, coatings application, and inspection is required for the QC and QA coatings inspectors. Acceptable training includes one or more of the following:

- National Association of Corrosion Engineers (NACE) – International: Coating Inspector Program Level 1
- Society for Protective Coatings (SSPC) - C-1 Fundamentals of Protective Coatings for Industrial Structures
- SSPC BCI Coatings Inspection Training and Certification for the Bridge Industry (Level I without certification), or Level II
- National Highway Institute (NHI) - Bridge Coating Inspection Course No. 130079
- Training in accordance with applicable documents developed by AASHTO/NSBA Steel Bridge Collaboration
- Other training that is acceptable to the Department.

The Job Control Record (JCR) shall include the following, as applicable:

- Type of application equipment.
- Surface preparation - cleanliness and anchor profile.
- Environmental conditions – ambient temperature, surface temperature, relative humidity, dew point.
- Coating batch and/or lot number, date of manufacture and shelf life.
- Name(s) of applicator(s).
- Dry Film Thickness (DFT) required/DFT measured.
- Cure data-time/temperature/relative humidity.
- Final inspection and acceptance by the Q.C.I.

Other job-specific test requirements specified on the plans or by The Department shall be included in the JCR.

506.06 Quality Assurance Inspector's Authority. The Q.A.I. will have the authority to reject material or workmanship that does not meet the contract requirements. The acceptance of material or workmanship by the Q.A.I. will not preclude subsequent rejection, if found unacceptable by other authorized representatives of The Department.

506.07 Rejections. Submit a non-conformance report to the Fabrication Engineer describing the deficiencies and proposed solution. Correct or replace rejected coatings.

506.08 Facilities for Inspection Provide a private office at the fabrication plant for inspection personnel authorized by the Department. The office shall be in close proximity to the work. The office shall be climate controlled to maintain the temperature

between 68° F and 75° F and have the exit(s) closed by a door(s) equipped with a lock and 2 keys which shall be furnished to the Inspector(s).

The Inspectors' office shall meet the following minimum requirements:

Description	Quantity
Inspector's office (minimum ft^2)	100
Drafting Table Surface ($ft.^2$)	35
Drafting stools-each	1
Office Desk	1
Ergonomic Swivel Chairs	1
Folding Chairs	2
Cordless telephone	1
Answering machine	1
High-speed internet connection (ports)	1
Fluorescent Lighting of 100 ft-candles minimum for all work areas	2
110 Volt 60 Cycle Electric Wall Outlets	3
Wall Closet	1
Plan Rack	1
Waste Basket with trash bags	1
Two-drawer file cabinet (locking)	1
Broom	1
Dustpan	1
Cleaning Materials	1
Water Cooler	1

The Contractor will be responsible for disposing of trash and supplying commercially bottled water for the water cooler.

The QAI will have the option to reject any furniture or supplies provided to the Inspector's Office based on general poor condition.

Provide parking space for MDOT personnel in close proximity to the Inspectors' Office. Maintain the pathway between the parking area and the Inspectors' Office so that it is free of obstacles, debris, snow and ice.

The facilities and all furnishings shall remain the property of the Contractor upon completion of the work. Payment for the facilities, heating, lighting, telephone installation, internet connection, basic monthly telephone and internet charges and all furnishings shall be incidental to the contract.

Failure to comply with the above requirements will be considered denial of access to work for the purpose of inspection. The Department will reject all work done when access for inspection is denied.

506.09 Applicator Qualification. Shop-applied paint systems shall be applied by applicators that hold a current AISC Sophisticated Paint Endorsement (SPE) or are qualified in accordance with SSPC QP3-*Standard Procedure for Evaluating Qualifications of Shop Painting Applicators.* For specialty items, the Fabrication Engineer may accept other shop qualifications based on experience and/or an audit by The Department. Thermal Spray Coating (TSC), including sealers and top coating, fusion bonded coatings and hot-dip galvanizing shall be applied in facilities with a minimum of five years documented experience of satisfactory performance. The applicator shall provide documentation (including Quality Control records) and references of successful application that are acceptable to the Fabrication Engineer.

COATING SYSTEMS-PAINT

506.10 Description. Work shall consist of the application of coating systems in accordance with the Plans and this Specification. The color shall be as specified on the Plans.

506.11 Materials. Coatings systems shall be from the Northeast Protective Coating Committee (NEPCOAT) Qualified Products List (QPL), list A or B. The list may be found through NEPCOAT's Web page: http://www.nepcoat.org.

Provide the paint batch description, lot number, date of manufacture, shelf life and the manufacturer's storage requirements to the Q.A.I. Provide the manufacturer's published data sheet for application of each coat of the coating system including equipment, surface cleanliness, anchor profile, mixing, thinning, application, cure time for the entire range of allowable environmental conditions and dry film thickness (DFT).

Paint batches shall be sampled and sent to an independent laboratory for testing of unit weight and FT/IR spectroscopy (fingerprint identification) to ensure that the supplied material compares favorably with the original material tested. The independent testing lab shall issue an opinion stating whether the tested paint batch compares favorably (is the same as) the originally tested material. Test results shall be furnished to the Fabrication Engineer at least 15 days prior to application. Sampling and testing may be waived by the Fabrication Engineer for small quantities.

506.12 Limits of work. All surfaces exposed in the assembled product shall be coated unless otherwise specified. Surfaces to be embedded in concrete shall receive a mist coat 0.5 to 1.0 mils of primer only.

Faying surfaces of bolted connections shall be primed only and develop a class B slip coefficient in accordance with the *"Specification for Structural Joints Using ASTM A325 or A 490 Bolts"* by the Research Council of Structural Connections (RCSC). Provide documentation to demonstrate that the primer was tested and the requirements were met. The documentation shall indicate the maximum DFT allowable to meet the class B slip coefficient.

506.13 Surface Preparation. Surface cleanliness shall be SSPC SP-10 unless a higher standard of surface cleanliness is required by the manufacturer's published data sheet. SSPC VIS.1 shall be used to determine acceptable surface cleanliness.

Round all corners exposed in the assembled product to approximately a 1/8 inch radius prior to abrasive blast cleaning. A series of tangents that approximate a radius will be considered as a rounded.

Prepare a plate approximately 3 inches by 12 inches with the appropriate rounded corner. The plate shall become the Job Standard for corner preparation.

The abrasive blast media shall meet the requirements of SSPC-AB 1, AB 2 or AB 3.

After abrasive blast cleaning, the surface shall be visually inspected by the Q.C.I. and Q.A.I. for fins, tears, delaminations and other unacceptable discontinuities. Unacceptable discontinuities shall be removed with a grinder or other suitable power tool and the area shall be blended at a slope of approximately 1:20. The affected area(s) shall be abrasive blast cleaned to develop an acceptable anchor profile. The Contractor may propose an alternative method of developing an acceptable anchor profile on repair areas. The proposed alternative method of developing an acceptable anchor profile shall be limited to areas no greater than 6 in.^{2}.

The anchor profile shall be angular and meet the requirements of the manufacturer's published data sheet. Measure the anchor profile in accordance with ASTM D 4417 Method C. If the anchor profile fails to meet the minimum requirements, re-blast the substrate until the minimum required anchor profile is achieved. If the anchor profile exceeds the maximum allowed in the manufacturer's published data sheet, generate an NCR describing the condition of the substrate and a proposed solution and submit it to the Fabrication Engineer for approval.

Measure the anchor profile of the substrate on every plane of each beam or girder. If it has been established to the satisfaction of the Q.A.I. that the abrasive blast equipment is capable of providing uniform, acceptable surface preparation, a diminished degree of testing may be allowed at the discretion of the Fabrication Engineer.

If there is a significant change in surface cleanliness or anchor profile due to blast media degradation or other reason, cease the blast operation until corrective action is taken. Solvent clean material that has been contaminated after blasting by handling, storage in accordance with SSPC SP-1 prior to primer application.

If compressed air is used for abrasive blast cleaning, a blotter test shall be performed in accordance with ASTM D 4285 at the beginning of each shift. The Q.A.I. shall be present to witness the blotter test.

The allowable time between abrasive blast cleaning and primer application shall not exceed the manufacturer's published recommendations or eight hours, whichever is less.

506.14 Application. Record the batch and lot numbers of the coating, the type and amount of thinner used, the time and pot life of the coating.

Mix and add thinner in conformance with the manufacturer's published data sheet. Measure thinner with a graduated cup or other container that clearly indicates the amount of thinner being added. Mix the paint using the method, equipment and time recommended by the coating manufacturer.

The environmental conditions in the immediate vicinity of the steel to be coated shall be within the ranges in the manufacturer's published data sheet during the coating operation and during the cure period. Provide a minimum of two data loggers capable of measuring ambient humidity and temperature. The data loggers shall come with software capable of downloading the data onto a computer and printing it out in a format acceptable to the Fabrication Engineer. Place the data loggers in the immediate vicinity of the coating operation during the entire application and curing cycle. The data will be used by the Department to determine the cure/recoat time for each coat. Failure to comply will result in the coating being cured for the maximum time necessary to assure adequate cure as determined by the Fabrication Engineer.

Corners, fasteners, welds and inaccessible locations shall be striped in accordance with SSPC PA 1. The striping shall extend a minimum of 1 inch from each edge. Do not stripe using inorganic zinc primer (IOZ). IOZ shall be striped between the first and second coats using the intermediate coating. If the coating is contaminated with dust, debris, over spray, or other deleterious material, the surface shall be solvent cleaned in accordance with SSPC SP 1 prior to recoating.

506.15 Dry Film Thickness. DFT shall be measured in accordance with SSPC PA 2. The results shall be documented in the JCR. The JCR documentation shall include the actual gage readings, spot average and the location(s). Each piece or area presented for acceptance, regardless of size shall be considered a separate structure for purposes of determining the number of spot measurements to be taken except that large quantities of small parts and/or secondary framing members coated at the same time may be measured at a lesser frequency as directed by the Fabrication Engineer. When random DFT testing of a large quantity of small parts and/or secondary framing members results in unacceptable DFTs, the Contractor shall have the option of measuring and documenting the DFT of each piece or removing the coating and/or recoating all pieces represented in the production lot.

506.16 Touch-up and Repairs. Touch-up shall be done in accordance with the manufacturer's published data sheet and this Specification. Prepare areas to be touched up in a manner that assures the proper adhesion of each coat. Each existing coat shall be feathered back to assure that each touch-up coat is continuous with each corresponding existing coat. The topcoat shall be smooth and uniform in appearance.

Repair damaged or unacceptable shop coating before the piece is removed from the paint area. Damaged areas shall be prepared in accordance with the manufacturer's published instructions or as directed by the Fabrication Engineer. Damaged or unacceptable coatings shall be repaired using the same coating system. Environmental conditions cure times and DFTs shall be in accordance with manufacturer's published data sheet for the coating being applied. Repairs to topcoat shall result in a uniform gloss and color match. The Fabrication Engineer shall have final authority concerning acceptable appearance.

506.17 Handling and Storage. Handle coated members in a manner that avoids damage to the coating. Lift and move members using non-metallic slings, padded chains and beam clamps, softeners or by other non-injurious methods. Store material, both at the coating facility and in the field, in a manner that prevents damage to the coating.

Document damage to the coating that is discovered after the product is loaded for shipment to the job site. Minor damage as a result of handling shall be considered field repair unless, in the opinion of the Fabrication Engineer the damage is the result of negligence or poor handling methods. Damage that is deemed to be the result of negligence or poor handling methods shall be repaired as directed by the Fabrication Engineer.

506.18 Field Touch-up Touch-up shall be done in accordance with the manufacturer's published data sheet and this Specification. Prepare areas to be touched up in a manner that assures the proper adhesion of each coat. Surface of the paint receiving additional coating shall be free from dust, grease, oil or other contaminate that would prevent bonding. Each existing coat shall be feathered back to assure that each touch-up coat is continuous with each corresponding existing coat. The topcoat shall be smooth and uniform in appearance.

Areas that were uncoated due to masking in the shop or were damaged as a result of erection activities shall be touched up to a uniform appearance. If all coating layers are damaged or defective, remove all coating layers to the specified degree of cleanliness. Feather the edges of the remaining coating to create a smooth transition from the repaired area to the remaining coating. Reapply all affected coating layers.

506.19 vacant.

HOT-DIP GALVANIZING

506.20 Description. Hot-dip galvanizing shall meet the requirements of AASHTO M 111M/M 111 (ASTM A 123) including any applicable requirements from AASHTO M 111M/M 111 (ASTM A 123) Section 2-Referenced Documents. The minimum average coating thickness grade shall conform to Table 1. The frequency of testing shall be in accordance with Section 6. The choice of the test method is the prerogative of the

Contractor. The Quality Assurance Inspector shall verify Quality Control results using the same test method used by the Quality Control Inspector.

Certification of compliance and written test results shall be provided to The Department in accordance with AASHTO M 111M/M 111 (ASTM A 123)-Section 10.

506.21 Surface Preparation. Abrasive blast clean the steel to a minimum of SSPC SP 6/NACE 3-Commercial Blast Cleaning prior to galvanizing. Prior to abrasive blast cleaning new steel, all corners exposed in the assembled product shall be rounded to approximately a 1/16 inch radius.

506.22 Repairs. Repairs to galvanizing shall be in accordance with Annex A1 or A3 of ASTM A 780. Zinc-rich paints for repairs may only be used with approval of the Fabrication Engineer.

506.23 Top-coating Galvanized Surfaces. Areas of galvanized surfaces to be top-coated will be described on the plans or in the Special Provisions.

Chromate quenching and other types of quenching after galvanizing are not permitted. Hot Dip Galvanized surfaces to be painted shall be smooth and have a uniform zinc thickness that is free of runs, sags and heavy buildup.

Clean surfaces to be top-coated in accordance with SSPC-SP 1. Abrasive blast clean all surfaces to be coated in accordance with SSPC-SP 7/NACE No.4-Brush-Off Blast Cleaning. Assure that the surface has an anchor profile that corresponds with the paint manufacturer's published data sheet. The blast media shall be a mineral or mineral slag that meets the requirements of SSPC AB-1-Mineral and Slag Abrasives. Steel shot or grit is not allowed.

Intermediate and topcoat coatings shall be from the current NEPCOAT QPL-list A, B or C. Sampling and testing shall be in accordance with 506.11.

Coatings shall be applied, measured, touched up and handled in accordance with 506.14 through 506.18.

506.24 Through 506.29 vacant.

THERMAL SPRAY COATING

506.30 Description. This work consists of application of Thermal Spray Coatings (TSC) to steel substrate in accordance with the Plans and this Specification. Requirements that are not stated in this specification shall be performed in accordance with Joint Standard *SSPC-CS 23.00/AWS C2.23M/NACE No. 12, Specification for the Application of Thermal*

Spray Coatings (Metallizing) of Aluminum, Zinc, and Their Alloys and Composites for the Corrosion Protection of Steel.

506.31 Materials. Feedstock shall meet the requirements of ASTM B 833, 85/15 Zinc-Aluminum (W-ZnAl-2). The Contractor shall submit a certified analysis of the feedstock to the Fabrication Engineer.

Seal coat and topcoat shall meet the following requirements:

Seal Coat	As recommended by the Topcoat Manufacturer
Topcoat	A listed topcoat product from the NEPCOAT QPL System

The seal coat shall contain pigmentation to indicate uniformity of application.

Topcoat shall be sampled and tested in accordance with 506.11.

506.32 Surface Preparation. Prior to abrasive blast cleaning, round all corners exposed in the assembled product to approximately a 1/16 inch radius. A series of tangents to the approximate radius will be considered as a rounded edge.

Abrasive blast clean all surfaces to be coated to the requirements of SSPC SP 5/NACE No. 1, White Metal Blast Cleaning. SSPC VIS. 1 shall be used to determine acceptable cleanliness.

The anchor profile shall be 2.0-4.0 mils. Measure the anchor profile in accordance with ASTM D 4417 Method C. If the anchor profile fails to meet the minimum required profile, re-blast the substrate until the minimum required anchor profile is achieved.

Measure the anchor profile of the substrate on the first piece blasted at the beginning of each shift and at a frequency not to exceed 4 hours thereafter. A measurement shall consist of one measurement on each plane of structural shapes or at approximately 120° intervals on pipes and round tubes.

If compressed air is used for abrasive blast cleaning, perform a blotter test in accordance with ASTM D 4285 at the beginning of each shift. The Q.A.I. shall be present to witness the blotter test.

506.33 TSC Requirements. The coating thickness shall be between 14 mils and 17 mils. The DFT on faying surfaces shall not exceed the thickness tested for Class B slip coefficient rating.

The TSC shall have a minimum tensile bond of 725 psi. The tensile bond shall be tested in accordance with ASTM D 4541-02. The frequency of testing shall be one test every 500 ft^2 or once per shift, whichever is less. The test location will be as directed by the Q.A.I. The specified tensile force shall be applied to the TSC and removed. If the test

does not reveal a failure of the TSC, the tensile bond shall be considered acceptable. If the test reveals a failure of the TSC, the coating shall be rejected.

A bend test as described in SSPC-CS 23.OO/AWS C2.23M/NACE No. 12. Section 6 shall be conducted at the beginning of each shift. If the bend test fails, take corrective action and perform another test.

Document the results of the tensile bond test and bend test in the JCR.

The TSC shall have a uniform appearance, free from blistering, cracks, loose particles, or exposed steel substrate when examined with 10-X magnification.

506.34 TSC Application. Apply the TSC by the arc spray process. Thermal spray equipment shall be set up, calibrated and operated per the manufacturer's instructions and technical manuals or the Thermal Spray Coating Applicator's (TSCA) refinement thereof and as validated by the Job Reference Standard (JRS).

Measure and record in the JCR the ambient temperature, surface temperature, relative humidity and dew point near the pieces being coated immediately prior to application. The substrate shall be 5° F above the dew point at the time of application.

Coat the substrate with a 1 mil to 2 mil flash/primer coat followed by several thin, overlapping passes to build the required DFT. Top flanges of beams requiring shear connectors shall receive a flash/primer coat only.

506.35 Seal Coat and Top Coat Application. Apply the seal coat within eight hours of the TSC application. Apply the topcoat after the seal coat has cured. The surfaces shall be free from contaminants immediately prior to application of the seal coat and topcoat.

Apply the seal coat and topcoat in accordance with SSPC-PA 1, "Shop, Field and Maintenance Painting", and the coating manufacturer's published recommendations.

The topcoat shall be applied to the outside surfaces and bottom flanges of bridge fascia beams.

Coating thickness shall be measured in accordance with SSPC-PA 2. The DFT shall conform to the requirements of the manufacturer's published data sheet. For the measurement of coating thickness, each piece coated will be considered a separate structure. Record the DFTs in the JCR.

506.36 Repairs. Repair damage to TSC by re-blasting the damaged area and re-applying TSC in accordance with this Specification.

Top coat shall repaired or touched-up in accordance with 506.16 and 506.18.

506.37 Through 506.39 vacant.

FUSION BONDED EPOXY

506.40 Description. The work shall consist of applying fusion-bonded epoxy (FBE) to a steel substrate. The FBE shall be applied to all surface areas indicated on the plans.

Coat steel pipe pile in accordance with ASTM A 972/A 972M as amended herein. Coat steel H piles and sheet piling in accordance with ASTM A 950/A 950M as amended herein. Coat steel reinforcing bars in accordance with ASTM A 775/A 775M. Coat other steel products in accordance with the plans and/or the direction of the Fabrication Engineer.

506.41 Materials. The FBE coating shall be a one-part, powder coating meeting the following requirements:

Property	Test Method	Value
Impact Resistance	ASTM G 14 3 lb. @ 40° F	80 inch-lb Min.
Abrasion Resistance	ASTM D 4060 (CS 10 wheel, 1000 gr. Load)	<70 mg/ 1000 cycles
Chemical Resistance	ASTM G 20 Modified (30 day immersion)	10 % CaCl no effect 10 % NaOH no effect
Cathodic Disbondment	ASTM G 8, Method A	3/8 in disbondment radius

Supply certified copies of all test results to the Fabrication Engineer. The test results shall include the lot number tested, date, test method and testing agency. The tests shall have been performed within 12 months of the beginning of work.

Provide Certified Mill Test Reports for the material to be coated prior to beginning the coating process.

Prior to shipment, the applicator shall furnish written certification that the coated pieces meet the requirements of this Specification.

506.42 Notice. The Contractor shall notify the Fabrication Engineer at least ten days prior to beginning coating. Steel coated without the Q.A.I. being present shall be subject to rejection.

506.43 Surface Preparation. Grind all butt welds flush prior to abrasive blast cleaning. Blast clean the steel to the requirements of SSPC SP10/NACE No.2, Near White Metal Blast. SSPC VIS. 1 shall be used to determine acceptable cleanliness.

506.44 Application. The FBE powder shall be applied and cured in accordance with the applicable ASTM Standard and the manufacturer's published data sheet.

The DFT of the coating shall average between 10 mils and 18 mils for embedded work or coating exposed to atmosphere. A minimum thickness of 18 mils is required for piles or other items that will be subjected immersion service.

506.45 Inspection. Measure the DFT using a fixed-probe gauge in accordance with SSPC PA 2. The testing procedure and reporting shall be in accordance with ASTM G 12. The frequency of testing shall be each piece coated unless a lesser frequency of testing is directed by the Fabrication Engineer.

506.46 Field Touch-up Furnish sufficient epoxy touch-up material as recommended by the powder manufacturer to repair all damaged coating. All damaged areas shall be touched-up in accordance with the repair coating manufacturer's recommendations. Touch up shall be in accordance with 506.18.

506.47 through 506.50 Vacant.

DRY POWDER (POLYESTER) COATING

506.51 Application Requirements. The requirements for polyester coating shall be the same as for FBE.

506.52 Through 506.59 vacant.

MEASUREMENT and PAYMENT

506.60 Method of Measurement. Protective coating shall be measured by the lump sum method, complete and accepted. The limits shall be as shown on the plans or as described within the respective subsection.

506.61 Basis of Payment. All work for Protective Coating will be paid for at the lump sum price for the respective item. Payment will be full compensation for all work and materials needed to complete the item; coating and cleaning materials, staging or accessing, testing, labor, surface preparation, cleaning, application, curing and repairs to coating, including field touch-up.

Pay Items		Pay Unit
506.9101	Galvanizing	Lump Sum
506.9102	Zinc Rich Coating System (Shop Applied)	Lump Sum
506.9104	Thermal Spray Coating (Shop Applied)	Lump Sum
506.9106	Fusion Bonded Epoxy Coating	Lump Sum
506.9107	Dry Powder (Polyester) Coating	Lump Sum

SPECIAL PROVISION
SECTION 511
COFFERDAMS

511.01 Description This work shall consist of the complete design, construction, maintenance and removal of cofferdams and other related work, including dewatering and inspection, required to allow for the excavation of foundation units, to permit and protect the construction of bridge or other structural units and to protect adjacent Roadways, embankments or other structural units, in accordance with the Contract.

511.02 Materials As specified in the cofferdam Working Drawings.

511.03 Cofferdam Construction

A. Working Drawings. The Contractor shall submit Working Drawings, showing the materials to be used and the proposed method of construction of cofferdams to the Department. Construction shall not start on cofferdams until such Working Drawings have been submitted. Any review of, or comment on, these Working Drawings by the Department shall not result in any liability upon the Department and it shall not relieve the Contractor of the responsibility for the satisfactory functioning of the cofferdam.

B. Construction. Construct cofferdams in conformance with the submitted Working Drawings. Cofferdams shall, in general, be carried below the elevation of the bottom of footings to adequate depths to ensure stability and adequate heights to seal off water. Cofferdams shall be braced and be as watertight as necessary for the safe and proper construction of the substructure Work inside them. With the exception of construction of a concrete foundation seal placed under water, the interior dimensions of cofferdams shall provide sufficient clearance for the construction and inspection of forms and to permit pumping outside of forms. The Contractor shall be responsible for the righting and resetting of cofferdams that have tilted or moved laterally, as required for construction.

During the placing and curing of seal concrete, the elevation of the water inside the cofferdam shall be controlled to prevent flow through the concrete.

No timber or bracing shall be used in cofferdams in such a way as to remain in the substructure Work.

Cofferdams shall be constructed to protect fresh concrete against damage from the sudden rising of the water body, to prevent damage by erosion and to prevent damage to adjacent Roadways, embankments or other structural units.

Unless otherwise noted, cofferdams, including all sheeting and bracing involved, shall be removed after the completion of the substructure Work in a manner that prevents disturbance or injury to the finished Work.

Cofferdams shall be constructed, dewatered and removed in accordance with the requirements of Section 656 - Temporary Soil Erosion and Water Pollution Control and related Special Provisions.

C. Inspection of Seal Cofferdams. Seal cofferdam excavations shall initially be inspected and approved by the Contractor.

For each seal cofferdam excavation, the Contractor shall submit a written procedure to the Resident for sediment/overburden removal and excavation inspection. For cofferdams where seal concrete is to be placed on bedrock, the inspection procedure shall describe the Contractor's final cleaning and inspection process for attaining cleanliness of each cofferdam excavation. For cofferdams where seal concrete is not excavated to bedrock, the procedure shall describe the Contractor's final cleaning and inspection process for attaining the bottom of seal elevation shown on the Plans.

The Contractor shall notify the Resident at least 48 hours prior to when each seal cofferdam excavation will be ready for final inspection by the Department. The Contractor shall allow adequate time for each occurrence of cofferdam excavation inspection by the Department. The Contractor shall provide and maintain access and equipment, such as steel probes, for the Resident and/or the Department's Dive Team to independently inspect each cofferdam excavation.

No seal concrete placement shall begin until the Department has approved the cofferdam excavation.

511.04 Pumping Pumping from the interior of any cofferdam shall be done in such a manner as to prevent any current of water that would carry away or segregate the concrete.

Pumping to dewater a sealed cofferdam shall not commence until the seal concrete has set sufficiently to withstand the hydrostatic pressure and meets the following minimum curing time, after the completion of the installation of the seal concrete:

1. When the temperature of the water body outside the cofferdam is greater than 40°F, a minimum of 5 days.
2. When the temperature of the water body outside the cofferdam is less than 40°F, a minimum of 7 days.

Procedures for the removal of all water and materials from cofferdams shall be described in the Soil Erosion and Water Pollution Control Plan as required in Section 656 Temporary Soil Erosion and Water Pollution Control and related Special Provisions.

511.05 Method of Measurement Cofferdams will be measured as one lump sum unit, as indicated on the Plans or called for in the Contract.

511.06 Basis of Payment The accepted quantity of cofferdam will be paid for at the Contract lump sum price for the respective cofferdam items, which price shall be full compensation for design, construction, maintenance, inspection and removal.

When required, the elevation of the bottom of the footing of any substructure unit may be lowered, without change in the price to be paid for cofferdams. However, if the average elevation of more than 25% of the area of the excavation is more than 3 feet below the elevation shown on the Plans, and if requested by the Contractor, then the additional costs incurred that are included in the cofferdam Pay Item will be paid for in accordance with Section 109.7 - Equitable Adjustments to Compensation. The Contractor shall immediately notify the Department when these additional costs commence. Failure of the Contractor to provide this notification will result in undocumented additional work that will be non-reimbursable. The Department will evaluate this additional work to determine an appropriate time extension, if warranted.

All costs for sedimentation control practices, including, but not limited to, constructing, maintaining, and removing sedimentation control structures, and pumping or transporting water and other materials for sedimentation control will not be paid for directly, but will be considered incidental to the cofferdam Pay Item(s).

All costs for related temporary soil erosion and water pollution controls, including inspection and maintenance, will not be paid for directly, but will be considered incidental to the cofferdam Pay Item(s).

All costs associated with preparation of Working Drawings, design calculations, written procedure for sediment/overburden removal and excavation inspection, and the inspection of the seal cofferdam excavation shall be considered incidental to the cofferdam Pay Item(s). There shall be no additional payment for repeated inspection by the Department of the same cofferdam excavation.

All costs for cofferdams and related temporary soil erosion and water pollution controls, including inspection and maintenance, will be considered incidental to related Pay Items, when a specific Pay Item for cofferdams is not included in the Contract.

Payment will be made under:

Pay Item	Pay Unit
511.07 Cofferdam	Lump Sum

SPECIAL PROVISION
SECTION 524
TEMPORARY STRUCTURAL SUPPORTS
(PROTECTIVE SHIELD)

524.01 Description

The following paragraph is added:

This work shall consist of all labor, equipment, and materials required to protect the railroad from forming and placement of concrete, existing bridge demolition, and other activities during the bridge construction on this project. Protective shield shall be installed for the new bridge construction and the existing bridge demolition over the Maine Central Railway to the approved limits as directed.

The following subsection is in addition to the standard specifications.

Construction Requirements.

Prior to the start of work, the Contractor shall submit to the Engineer a set of plans for review and comment indicating the proposed method to protect the railroad, sizes and dimension of material used, and indicating connections and fasteners to be used. The protective shield shall be designed and stamped by a Licensed Professional Engineer of the State of Maine.

The protective shield shall be designed to safely support all anticipated loads from small pieces of concrete and other materials from falling from the existing bridge deck during saw cutting and removal operations, initial handling operations while the deck is being constructed on the new bridge, and to protect against small tools falling onto the railroad property or persons below. The shield design shall be approved by the Engineer and installed prior to the start of construction on the new bridge superstructure or removal operations on the exiting bridge. The protective shield shall remain in position during any demolition work, new deck installation, placement of concrete, and placement of bridge rails. The shield shall not be installed, relocated or removed without approval of the Engineer.

During handling of large pieces of work over the areas of concern the Contractor shall coordinate construction activities with the railway owner (Pan-Am) to not impact scheduled railway operations.

524.28 Method of Measurement

The following paragraph is added:

Protective shield will be measured for payment as one lump sum, complete in place and accepted.

524.29 Basis of Payment

The following paragraph is added:

Payment shall include design, labor, equipment, and furnishing all time and material necessary to complete the work as specified herein and approved by the Engineer.

Payment will be made under:

Pay Item	Pay Unit
524.40 Protective Shield	Lump Sum

May 13, 2008
Supercedes June 24, 2004

SPECIAL PROVISION
SECTION 526
CONCRETE BARRIER
(Temporary Concrete Barrier)

Materials

Temporary concrete barriers must be connected in accordance with Standard Detail 526(02) except as indicated below:

The top of the rod may be hooked over the top connector instead of using the hex nut and washer.

SPECIAL PROVISIONS
SECTION 527
ENERGY ABSORBING UNIT
(Work Zone Crash Cushion)

Description A Work Zone Crash Cushion shall be furnished and installed at each exposed end of temporary concrete barrier, where shown on the plans or as directed. A Work Zone Crash Cushion must comply with NCHRP Report 350. Work Zone Crash Cushions Meeting NCHRP 350 include, but are not limited to the following: The N-E-A-T from Energy Absorption Systems out of Chicago Illinois, Adiem-II from Syro Inc. out of Dallas, Texas, Clusters of the Energite III sand barrels from Energy Absorption Systems out of Chicago Illinois or an approved equal..

CONSTRUCTION REQUIREMENTS

Clusters shall be provided as shown in the Standard Detail book. Clusters shall be provided for the posted speed limit.

Work Zone Crash Cushions which are damaged or destroyed shall be repaired or replaced promptly.

Method of Measurement Work Zone Crash Cushions shall be measured by the unit, complete, accepted and installed on the project. A cluster of Energite III sand barrels is considered a unit. Each N-E-A-T or Adiem II is considered a unit.

Basis of Payment The accepted quantity of Work Zone Crash Cushions complete in place will be paid for at the contract unit price for each unit. Such payment will be full compensation for furnishing and placing the Work Zone Crash Cushion including all incidentals and for resetting as many times as required.

Replacements for the Work Zone Crash Cushions damaged by collisions will be paid for as new Work Zone Crash Cushions and the removal of the impacted devices and debris will be considered incidental to the replacement units. Replacement Work Zone Crash Cushions on hand, but unused will not be paid for directly.

Payment will be made under:

Pay Item		Pay Unit
527.34	Work Zone Crash Cushions	Unit

SPECIAL PROVISION
SECTION 535
PRECAST, PRESTRESSED CONCRETE SUPERSTRUCTURE
(PRECAST STRUCTURAL CONCRETE PANEL WALL)

535.01 Description

The following paragraphs are added:

The work under this item shall consist of fabrication, furnishing, transportation, and erection of Precast Structural Concrete Panel Wall system, including miscellaneous items necessary for a complete installation as noted on the plans.

The Precast Structural Concrete Panel Walls shall consist of precast prestressed panels, all connection hardware as indicated on the plans, cast-in-place concrete footing and reinforcing steel, and cast-in-place concrete coping, reinforcing steel, and mechanical couplers shown on the plans and specified herein. Connection hardware includes coil bar inserts, connection rods, coil bar nuts, plate washers, galvanized steel connection angle, and shear stud connectors shown on the plans and specified herein.

The Precast Prestressed Panels shall be fabricated and erected in accordance with these specifications, and Section 535 of the Standard Specifications.

The Precast Panel Wall Footing and Coping Concrete, Reinforcing Steel, and Mechanical Couplers shall be furnished and placed in accordance with these specifications, and Sections 502 and 503 of the Standard Specifications.

The Precast Panel Wall Connection Angles and other steel connection hardware shall be fabricated and constructed in accordance with these specifications, and Sections 504 of the Standard Specifications.

The Precast Panel Wall Shear Studs shall be furnished and installed in accordance with these specifications, and Sections 505 of the Standard Specifications.

The Precast Structural Concrete Panel Walls shall be constructed in accordance with these specifications and in conformity with the lines, grades, design criteria, and dimensions shown on the plans.

535.02 Materials.

The following paragraphs are added:

The Contractor shall furnish to the Resident the appropriate Certificates of Compliance certifying that the applicable panel wall materials meet the requirements of the project specifications. All materials used in the construction of the Precast Structural Concrete Panel

Walls shall meet the requirements specified in the identified subsections of the Maine Standard Specifications and as specified herein.

Materials not conforming to this section of the specifications, or from sources not listed in the contract documents, shall not be used without written consent from the Resident.

Structural Steel	713.01
Shear Stud Connectors	711.06
Stainless Steel	711.12
Separation Geotextile	722.04

Precast Panel Wall Footing Keyway shall be grouted as shown on the plans. Grout shall conform to Standard Specification subsection 535.25.

Compressible Joint Filler:

Compressible Joint Filler shall be a closed-cell polyethylene or PVC foam, premolded to a semi-rigid consistency.

When tested in accordance with ASTM D 3575, the premolded foam shall have the following physical properties:

Property	Test Procedure	Minimum	Maximum
Density, lbs/ft3	Test C	3	5
Buoyancy, lbs/ft3	Test AA	52	58
Tensile Strength, psi	Test E	35	---
Water Absorption, % by volume	Test G	---	0.5
Tensile Elongation, %	Test E	65	75
Compression Strength, psi	Test B @ 25%	10	15
Compressive Strength, psi	Test B @ 50%	20	25
Compressive Set Not Recovered, % original thickness	Test A	10	15

535.20 Finishing Concrete and Repairing Defects

The following paragraph is added:

Concrete surface for the front face shall have a smooth steel formed finish, or as noted on the plans. The rear face shall have an unformed surface finish. The rear face of the panel shall be roughly screeded to eliminate open pockets of aggregate and surface distortions in excess of ¼ in.

535.22 Tolerances

The following paragraphs are added:

Precast Prestressed Panels shall be manufactured to the following tolerances:

Precast, Prestressed Panels	
Length	± 1/8 in/10 ft of length or ¼ in, whichever is greater
Width	± ¼ in
Depth	± ¼ in
End squareness or skew	± ¼ in (deviation from required)
Horizontal Alignment	± ¼ in (deviation from straight line parallel to centerline of member)
Center of Gravity of Strand Group	± ¼ in
Concrete Cover	+ ¼ in, -0 in
Position of Inserts for Structural Connections	± ¼ in
Differential Camber Between Adjacent Units	± 1/8 in/10 ft of length or ¼ in, whichever is greater

Materials not conforming to this section of the specifications, or from sources not listed in the contract documents, shall not be used without written consent from the Resident.

535.28 Method of Measurement

The following paragraphs are added:

Precast Structural Concrete Panel Wall will be measured for payment as one lump sum unit.

535.29 Basis of Payment

The following paragraphs are added:

Precast Structural Concrete Panel Wall will be paid for at the contract lump sum price complete in place. Payment shall be full compensation for fabrication and erection of Precast Structural Concrete Panel Wall system, furnishing all labor, equipment and materials including precast prestressed panels, all connection hardware as indicated on the plans, cast-in-place concrete footing and reinforcing steel, and cast-in-place concrete coping, reinforcing steel and mechanical couplers as shown on the plans and specified herein.

Payment will be made under:

Pay Item	Pay Unit
535.31 Precast Structural Concrete Panel Wall	Lump Sum

SPECIAL PROVISION
SECTION 606
GUARDRAIL
(Remove and Dispose)

This Section of the Standard Specifications is amended by the addition of the following:

Description This work shall consist of the removing and disposing of existing beam guardrail, as indicated on the plans.

CONSTRUCTION REQUIREMENTS

General The existing guardrail shall be removed and shall become the property of the Contractor to be disposed of off the project.

Method of Measurement Guardrail, Remove and Dispose, will be measured by the meter [foot] of rail.

Basis of Payment The quantity of Guardrail, Remove and Dispose, will be paid for at the contract unit price per meter [foot].

Payment will made under:

Pay Item	Pay Unit
606.363 Guardrail, Remove and Dispose	Meter [Foot]

SPECIAL PROVISION
SECTION 606
GUARDRAIL

606.01 Description This work shall consist of furnishing and installing guardrail components in accordance with these specifications and in reasonably close conformity with the lines and grades shown on the plans or as established. The types of guardrail are designated as follows:

Type 3-Galvanized steel "w" beam, wood posts or galvanized steel posts.
Type 3a-Galvanized steel "w" beam, wood posts, wood or composite offset blocks.
Type 3aa-Corrosion resistant steel "w" beam, wood posts, wood or composite offset blocks.
Type 3b-Galvanized steel "w" beam, galvanized steel posts, galvanized steel offset blocks.
Type 3c-Galvanized steel "w" beam, wood posts or galvanized steel posts, wood or composite offset blocks.
Type 3d-Galvanized steel "w" beam, galvanized steel posts, wood or composite offset blocks.
Thrie Beam-Galvanized steel thrie beam, wood posts or galvanized steel posts, wood or composite offset blocks.

Median barriers shall consist of two beams of the above types, mounted on single posts. Except for thrie beam, median barriers may include rub rails when called for.

Bridge mounted guardrail shall consist of furnishing all labor, materials, and equipment necessary to install guardrail as shown on the plans. This work shall also include drilling for and installation of offset blocks if specified, and incidental hardware necessary for satisfactory completion of the work.

Remove and Reset and Remove, Modify, and Reset guardrail shall consist of removing the existing designated guardrail and resetting in a new location as shown on the plans or directed by the Resident. Remove, Modify, and Reset guardrail and Modify guardrail include the following guardrail modifications: Removing plate washers at all posts, except at anchorage assemblies as noted on the Standard Details, Adding offset blocks, and other modifications as listed in the Construction Notes or General Notes. Modifications shall conform to the guardrail Standard Details.

Bridge Connection shall consist of the installation and attachment of beam guardrail to the existing bridge. This work shall consist of constructing a concrete end post or modifying an existing endpost as required, furnishing, and installing a terminal connector, necessary hardware, and incidentals required to complete the work as shown on the plans. Bridge Transition shall consist of a bridge connection and furnishing and installing guardrail components as shown in the Standard Details.

606.02 Materials Materials shall meet the requirements specified in the following Sections of Division 700 - Materials:

Timber Preservative	708.05
Metal Beam Rail	710.04
Guardrail Posts	710.07
Guardrail Hardware	710.08

Guardrail components shall meet the applicable standards of "A Guide to Standardized Highway Barrier Hardware" prepared and approved by the AASHTO-AGC-ARTBA Joint Cooperative Committee, Task Force 13 Report.

Posts for underdrain delineators shall be “U” channel steel, 2.44m [8 ft] long, 3.72 kg/m [2 ½ lb/ft] minimum and have 9.5 mm [3/8 in] round holes, 25 mm [1 in] center to center for a minimum distance of 610 mm [2 ft] from the top of the post.

Reflectorized Flexible Guardrail Markers shall be mounted on all guardrails. A marker shall be mounted onto guardrail posts at the flared end treatment’s terminal and its tangent point, both at the leading and trailing ends of each run of guardrail. The marker’s flexible posts shall be grey with either silver-white or yellow reflectors (to match the edge line striping) at the tangents, red at leading ends, and green at trailing ends. Whenever the end treatment is not flared, markers will only be required at the end treatment’s terminal. These shall be red or green as appropriate. Markers shall be installed on the protected side of guardrail posts unless otherwise approved by the Resident. Reflectorized flexible guardrail markers shall be from the Maine DOT’s Approved Product List of Guardrail Material. The marker shall be grey, flexible, durable, and of a non-discoloring material to which 75 mm [3 in] by 225 mm [9 in] reflectors shall be applied, and capable of recovering from repeated impacts. Reflective material shall meet the requirements of Section 719.01 for ASTM D 4956 Type III reflective sheeting. The marker shall be secured to the guardrail post with two fasteners, as shown in the Standard Details.

Reflectorized beam guardrail (“butterfly”-type) delineators shall be mounted on all “w”-beam guardrail. The delineators shall be mounted within the guardrail beam at guardrail posts. Delineators shall be fabricated from high-impact, ultraviolet & weather resistant thermoplastic. Reflectorized beam guardrail delineators shall be placed at approximately 20 m [62.5 ft] intervals or every tenth post on tangents and at approximately 10 m [31.25 ft] intervals or every fifth post on curves. Exact locations of the delineators shall be as directed by the Resident. On divided highways, the left hand delineators shall be yellow and the right hand delineators shall be silver/white. On two directional highways, the right hand side shall be silver/white and no reflectorized delineator used on the left. All reflectors shall have reflective sheeting applied to only one side of the delineator facing the direction of traffic as shown in the Standard Detail 606(07). Reflectorized sheeting for guardrail delineators shall meet the requirements of Section 719.01.

Single wood post shall be of cedar, white oak, or tamarack, well seasoned, straight, and sound and have been cut from live trees. The outer and inner bark shall be removed and all knots trimmed flush with the surface of the post. Posts shall be uniform taper and free of kinks and bends.

Single steel post shall conform to the requirements of Section 710.07 b.

Single steel pipe post shall be galvanized, seamless steel pipe conforming to the requirements of ASTM A120, Schedule No. 40, Standard Weight.

Acceptable multiple mailbox assemblies shall be listed on the Department’s Approved Products List and shall be NCHRP 350 tested and approved.

The Guardrail 350 Flared Terminal shall be a terminal with a 1.2 m [4 ft] offset as shown in the Manufacturer's installation instructions.

Existing materials damaged or lost during adjusting, removing and resetting, or removing, modifying, and resetting, shall be replaced by the Contractor without additional compensation. Existing guardrail posts and guardrail beams found to be unfit for reuse shall be replaced when directed by the Resident.

606.03 Posts Posts for guardrail shall be set plumb in holes or they may be driven if suitable driving equipment is used to prevent battering and distorting the post. When posts are driven through pavement, the damaged area around the post shall be repaired with approved bituminous patching. Damage to lighting and signal conduit and conductors shall be repaired by the Contractor.

When set in holes, posts shall be on a stable foundation and the space around the posts, backfilled in layers with suitable material, thoroughly tamped.

The reflectorized flexible guardrail markers shall be set plumb with the reflective surface facing the oncoming traffic. Markers shall be installed on the protected side of guardrail posts. Markers, which become bent or otherwise damaged, shall be removed and replaced with new markers.

Single wood posts shall be set plumb in holes and backfilled in layers with suitable material, thoroughly tamped. The Resident will designate the elevation and shape of the top. The posts, that are not pressure treated, shall be painted two coats of good quality oil base exterior house paint.

Single steel posts shall be set plumb in holes as specified for single wood posts or they may be driven if suitable driving equipment is used to prevent battering and distorting the post.

Additional bolt holes required in existing posts shall be drilled or punched, but the size of the holes shall not exceed the dimensions given in the Standard Details. Metal around the holes shall be thoroughly cleaned and painted with two coats of approved aluminum rust resistant paint. Holes shall not be burned.

606.04 Rails Brackets and fittings shall be placed and fastened as shown on the plans. Rail beams shall be erected and aligned to provide a smooth, continuous barrier. Beams shall be lapped with the exposed end away from approaching traffic.

End assemblies shall be installed as shown on the plans and shall be securely attached to the rail section and end post.

All bolts shall be of sufficient length to extend beyond the nuts but not more than 13 mm [½ in]. Nuts shall be drawn tight.

Additional bolt holes required in existing beams shall be drilled or punched, but the size of the holes shall not exceed the dimensions given in the Standard Details. Metal around the holes shall be thoroughly cleaned and painted with two coats of approved aluminum rust resistant paint. Holes shall not be burned.

606.045 Offset Blocks The same offset block material is to be provided for the entire project unless otherwise specified.

606.05 Shoulder Widening At designated locations the existing shoulder of the roadway shall be widened as shown on the plans. All grading, paving, seeding, and other necessary work shall be in accordance with the Specifications for the type work being done.

606.06 Mail Box Post Single wood post shall be installed at the designated location for the support of the mailbox. The multiple mailbox assemblies shall be installed at the designated location in accordance with the Standard Details and as recommended by the Manufacturer. Attachment of the mailbox to the post will be the responsibility of the home or business owner.

606.07 Abraded Surfaces All galvanized surfaces of new guardrail and posts, which have been abraded so that the base metal is exposed, and the threaded portions of all fittings and fasteners and cut ends of bolts shall be cleaned and painted with two coats of approved rust resistant paint.

606.08 Method of Measurement Guardrail will be measured by the meter [linear foot] from center to center of end posts along the gradient of the rail except where end connections are made to masonry or steel structures, in which case measurement will be as shown on the plans.

Terminal section, low volume end, NCHRP 350 end treatments, reflectorized flexible guardrail marker, terminal end, bridge transition, bridge connection, multiple mailbox post, and single post will be measured by each unit of the kind specified and installed.

Widened shoulder will be measured as a unit of grading within the limits shown on the plans.

Excavation in solid rock for placement of posts will be measured by the cubic meter [cubic yard] determined from the actual depth of the hole and a hypothetical circle diameter of 600 mm [2 ft].

606.09 Basis of Payment The accepted quantities of guardrail will be paid for at the contract unit price per meter [linear foot] for the type specified, complete in place. Reflectorized beam guardrail (“butterfly”-type) delineators will not be paid for directly, but will be considered incidental to guardrail items. Terminal section, buffer end, NCHRP 350 end treatment, bridge connection, single post and reflectorized flexible guardrail markers will be paid for at the contract unit price each for the kind specified complete in place.

NCHRP 350 end treatments and low volume guardrail ends will be paid for at the contract price each, complete in place which price shall be full payment for furnishing and installing all components including the terminal section, posts, offset blocks, "w" beam, cable foundation posts, plates and for all incidentals necessary to complete the installation within the limits as shown on the Standard Details or the Manufacturer’s installation instructions. Each end treatment will be clearly marked with the manufacturers name and model number to facilitate any future needed repair. Such payment shall also be full compensation for furnishing all material, excavating, backfilling holes, assembling, and all incidentals necessary to complete the work, except that for excavation for posts or anchorages in solid ledge rock, payment will be made under Pay Item 206.07. Type III Retroreflective Adhesive Sheeting

shall be applied to the approach buffer end sections and sized to substantially cover the end section. On all roadways, the ends shall be marked with alternating black and retroreflective yellow stripes. The stripes shall be 75 mm [3 in] wide and sloped down at an angle of 45 degrees toward the side on which traffic is to pass the end section. Guardrail 350 flared terminal shall also include a set of installation drawings supplied to the Resident.

Anchorages to bridge end posts will be part of the bridge work. Connections thereto will be considered included in the unit bid price for guardrail.

Guardrail to be placed on a radius of curvature of 45 m [150 ft] or less will be paid for under the designated radius pay item for the type guardrail being placed.

Widened shoulder will be paid for at the contract unit price each complete in place and will be full compensation for furnishing and placing, grading and compaction of aggregate subbase and any required fill material.

Adjust guardrail will be paid for at the contract unit price per meter and will be full compensation for adjusting to grade. Payment shall also include adjusting terminal end treatments where required.

Modify guardrail will be paid for at the contract unit price per meter and will be full compensation for furnishing and installing offset blocks, additional posts, and other specified modifications; removing, modifying, installing, and adjusting to grade existing posts and beams; removing plate washers and backup plates, and all incidentals necessary to complete the work. Payment shall also include removing and resetting terminal ends where required.

Remove and Reset guardrail will be paid for at the contract unit price per meter and will be full compensation for removing, transporting, storing, reassembling all parts, necessary cutting, furnishing new parts when necessary, reinstalling at the new location, and all other incidentals necessary to complete the work. Payment shall also include removing and resetting terminal ends when required. No payment will be made for guardrail removed, but not reset and all costs for such removal shall be considered incidental to the various contract pay items.

Remove, Modify, and Reset guardrail will be paid for at the contract unit price per meter and will be full compensation for the requirements listed in Modify guardrail and Remove and Reset guardrail.

Bridge Connections will be paid for at the contract unit price each. Payment shall include, attaching the connection to the endpost including furnishing and placing concrete and reinforcing steel necessary to construct new endposts if required, furnishing and installing the terminal connector, and all miscellaneous hardware, labor, equipment, and incidentals necessary to complete the work.

Bridge Transitions will be paid for at the contract unit price each. Payment shall include furnishing and installing the thrie beam or “w”-beam terminal connector, doubled beam section, and transition section, where called for, posts, hardware, precast concrete transition curb, and any other necessary materials and labor, including the bridge connection as stated in the previous paragraph.

Payment will be made under:

	Pay Item	Pay Unit
606.15	Guardrail Type 3a-Single Rail	meter [Linear Foot]
606.151	Guardrail Type 3aa-Single Rail	meter [Linear Foot]
606.17	Guardrail Type 3b-Single Rail	meter [Linear Foot]
606.1721	Bridge Transition - Type I	Each
606.1722	Bridge Transition - Type II	Each
606.1731	Bridge Connection - Type I	Each
606.1732	Bridge Connection - Type II	Each
606.178	Guardrail Beam	meter [Linear foot]
606.18	Guardrail Type 3b - Double Rail	meter [Linear foot]
606.19	Guardrail Type 3a - 4.5 m [15 ft] radius and less	meter [Linear Foot]
606.191	Guardrail Type 3aa - 4.5 m [15 ft] radius and less	meter [Linear Foot]
606.20	Guardrail Type 3a - over 4.5 m [15 ft] radius	meter [Linear Foot]
606.201	Guardrail Type 3aa - over 4.5 m [15 ft] radius	meter [Linear Foot]
606.21	Guardrail Type 3b - 4.5 m [15 ft] radius and less	meter [Linear Foot]
606.22	Guardrail Type 3b - over 4.5 m [15 ft] radius	meter [Linear Foot]
606.23	Guardrail Type 3c - Single Rail	meter [Linear Foot]
606.2301	Guardrail Type 3c - Double Rail	meter [Linear Foot]
606.231	Guardrail Type 3c - 4.5 m [15 ft] radius and less	meter [Linear Foot]
606.232	Guardrail Type 3c - over 4.5 m [15 ft] radius	meter [Linear Foot]
606.24	Guardrail Type 3d - Single Rail	meter [Linear Foot]
606.2401	Guardrail Type 3d - Double Rail	meter [Linear Foot]
606.241	Guardrail Type 3d - 4.5 m [15 ft] radius and less	meter [Linear Foot]
606.242	Guardrail Type 3d - over 4.5 m [15 feet] radius	meter [Linear Foot]
606.25	Terminal Connector	Each
606.257	Terminal Connector - Thrie Beam	Each
606.265	Terminal End-Single Rail - Galvanized Steel	Each
606.266	Terminal End-Single Rail - Corrosion Resistant Steel	Each
606.275	Terminal End-Double Rail - Galvanized Steel	Each
606.276	Terminal End-Double Rail - Corrosion Resistant Steel	Each
606.353	Reflectorized Flexible Guardrail Marker	Each
606.354	Remove and Reset Reflectorized Flexible Guardrail Marker	Each
606.356	Underdrain Delineator Post	Each
606.358	Guardrail, Modify, Type 3b to 3c	meter [Linear Foot]
606.3581	Guardrail, Modify Existing to Type 3d	meter [Linear Foot]
606.362	Guardrail, Adjust	meter [Linear Foot]
606.365	Guardrail, Remove, Modify, and Reset, Type 3b to 3c	meter [Linear Foot]
606.3651	Guardrail, Remove, Modify, and Reset Existing to Type 3d	meter [Linear Foot]
606.366	Guardrail, Removed and Reset, Type 3c	meter [Linear Foot]
606.367	Replace Unusable Existing Guardrail Posts	Each
606.47	Single Wood Post	Each
606.48	Single Galvanized Steel Post	Each
606.50	Single Steel Pipe Post	Each

606.51	Multiple Mailbox Support	Each
606.55	Guardrail Type 3 - Single Rail	meter [Linear Foot]
606.551	Guardrail Type 3 - Single Rail with Rub Rail	meter [Linear Foot]
606.56	Guardrail Type 3 - Double Rail	meter [Linear Foot]
606.561	Guardrail Type 3 - Double Rail with Rub Rail	meter [Linear Foot]
606.568	Guardrail, Modify Type 3c -Double Rail	meter [Linear Foot]
606.59	Guardrail Type 3 - 4.5 m [15 ft] radius and less	meter [Linear Foot]
606.60	Guardrail Type 3 - over 4.5 m [15 ft] radius	meter [Linear Foot]
606.63	Thrie Beam Rail Beam	meter [Linear Foot]
606.64	Guardrail Thrie Beam - Double Rail	meter [Linear Foot]
606.65	Guardrail Thrie Beam - Single Rail	meter [Linear Foot]
606.66	Terminal End Thrie Beam	Each
606.70	Transition Section - Thrie Beam	Each
606.71	Guardrail Thrie Beam - 4.5 m [15 ft] radius and less	meter [Linear Foot]
606.72	Guardrail Thrie Beam - over 4.5 m [15 ft] radius	meter [Linear Foot]
606.73	Guardrail Thrie Beam - Single Rail Bridge Mounted	meter [Linear Foot]
606.74	Guardrail Type 3 - Single Rail Bridge Mounted	meter [Linear Foot]
606.753	Widen Shoulder for Low Volume Guardrail End - Type 3	Each
606.754	Widen Shoulder for Guardrail 350 Flared Terminal	Each
606.78	Low Volume Guardrail End - Type 3	Each
606.79	Guardrail 350 Flared Terminal	Each

1. Reflectorized Flexible Guardrail Markers shall be from Maine DOT's Approved Product List of Guardrail Material.

2. Installation:
   a. Each bolt-hole diameter shall be the bolt diameter + 1/16".
   b. Wood post attachment - attach marker with 2, 5/16" diameter zinc-coated lag bolts, having 2" of embedment into wood post.
   c. Steel post attachment - attach marker with 2, 1/4" diameter zinc-coated bolt, washer and nut assemblies, having 1/2" of bolt extension behind steel post.
   d. When provided by the marker manufacturer, a stiffening pipe shall be inserted into the base of the marker prior to drilling bolt holes and shall remain in-place.

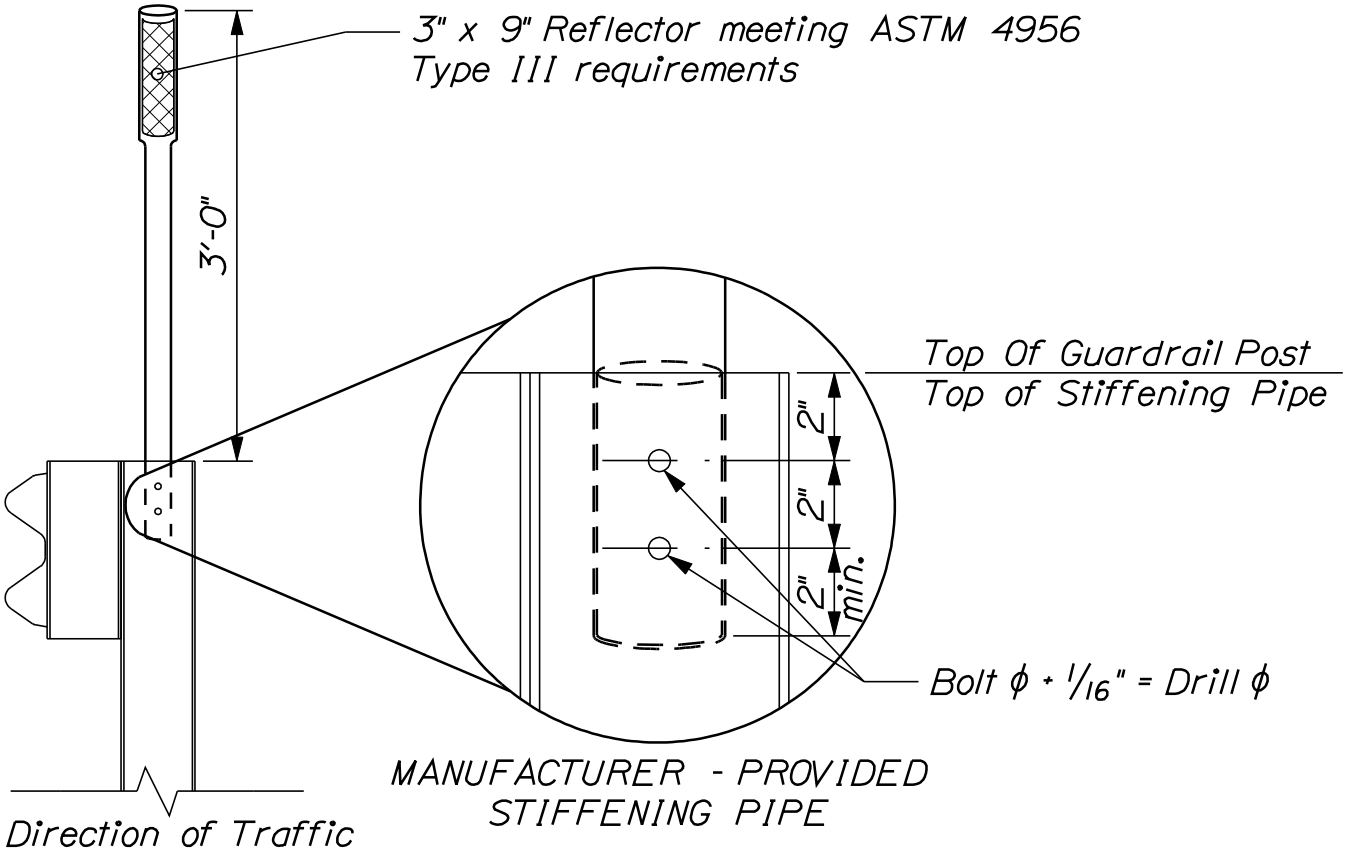

REFLECTORIZED FLEXIBLE GUARDRAIL MARKER DETAILS

606(34)

SPECIAL PROVISION
SECTION 607
Chain Link Snow Fencing

Section 607 Fences, of the Standard Specifications is amended as follows:

607.01 Description: This subsection is revised to read as follows:

Construct fence as shown in the plans.

Payment will be made under:

Pay Item		Pay Unit
607.184	Chain Link Snow Fence 3 ft	Linear Foot

SPECIAL PROVISION
SECTION 609
CURBING
(Curbing - Removed and Stacked)

Description This work shall consist of removing, transporting to a secured site approved by the Resident and stacking existing granite curbing.

CONSTRUCTION REQUIREMENTS

Removal The granite curbing designated to be removed and stacked shall be carefully lifted from its position and hauled to a secured site approved by the Resident. The Contractor shall stack the granite curbing at the site as directed

Stacking The curbing shall be carefully and neatly stacked on wooden planks at the stacking area. Curbing which is considered unfit for reuse shall be disposed of by the Contractor at his own expense.

Basis of Payment Curbing, removed and stacked, will be paid by the linear foot which will be full compensation for all labor, equipment, transporting, stacking and any incidentals needed to complete the item.

Pay Item		Unit
609.441	Curbing Removed and Stacked	Linear Foot

SPECIAL PROVISION
SECTION 610
STONE FILL, RIPRAP, STONE BLANKET, AND STONE DITCH PROTECTION

Add the following paragraph to Section 610.02:

Materials shall meet the requirements of the following Sections of Special Provision 703:

Stone Fill	703.25
Plain and Hand Laid Riprap	703.26
Stone Blanket	703.27
Heavy Riprap	703.28
Definitions	703.32

Add the following paragraph to Section 610.032.a.

Stone fill and stone blanket shall be placed on the slope in a well-knit, compact and uniform layer. The surface stones shall be chinked with smaller stone from the same source.

Add the following paragraph to Section 610.032.b:

Riprap shall be placed on the slope in a well-knit, compact and uniform layer. The surface stones shall be chinked with smaller stone from the same source.

Add the following to Section 610.032:

Section 610.032.d. The grading of riprap, stone fill, stone blanket and stone ditch protection shall be determined by the Resident by visual inspection of the load before it is dumped into place, or, if ordered by the Resident, by dumping individual loads on a flat surface and sorting and measuring the individual rocks contained in the load. A separate, reference pile of stone with the required gradation will be placed by the Contractor at a convenient location where the Resident can see and judge by eye the suitability of the rock being placed during the duration of the project. The Resident reserves the right to reject stone at the job site or stockpile, and in place. Stone rejected at the job site or in place shall be removed from the site at no additional cost to the Department.

SPECIAL PROVISIONS
SECTION 618.143
LANDSCAPE

(Falmouth Meadow Mix)

This Special Provision provides a Meadow Seed Mix to be used on open naturalized lawn areas as directed by the resident. The contractor shall follow MDOT Standard Specifications Rev. December, 2002 for landscape materials and hydroseeding installation procedures (sec 621).

20 % Redtop *(Agrostis alba)*
10 % Sheep Fescue *(Festuca ovina)*
10 % Perennial Ryegrass *(Lolium perenne)*
10 % Crimson Clover (*Trifulium incarnatum*)
10 % White Clover (*Trifolium repens*)
5 % Rice cutgrass *(Leersia oryzoides)*
5 % Shallow Sedge (Carex lurida)
5 % Hop Sedge (Carex lupulina)
5 % New England Aster *(Aster noviae-angliae)*
10 % Black Eyed Susan *(Rudbeckia hirta)*
5 % Canada Goldenrod *(Solidago canadensis)*
5 % Early Goldenrod *(Solidago juncea)*

This mix shall be applied by hydroseeding at the rate of 1/2 lb per unit (1,000 sq. ft.).

This method shall be hydroseeded with fiber mulch, fertilizer and lime per Standard Specifications. These materials shall be included in and incidental to the seeding cost.

717.03 Seed All seed shall be certified as to mixture, germination, purity, and live seed.

A. Percent germination > 80 %
B. Pure live seed > 85 %
C. Percent Purity > 85 %
D. Weed seed <1 %
E. All seed shall be from the current years crop unless recent tests by an approved testing agency demonstrate the approved requirements.

* * *

SPECIAL PROVISION
SECTION 620
GEOTEXTILES
(HDPE Geomembrane)

620.01 Description

The following sentence is added:

This work shall include installation of HDPE Geomembrane as shown in the Contract Drawings, or as directed by the Resident.

MATERIALS

620.02 Materials

The following sentence is added:

HDPE Geomembrane shall be Poly-Flex 40 mil. High Density Polyethylene (HDPE) as manufactured by Poly-Flex, Inc., 2000 W. Marshall Drive, Grand Prairie, TX 75051, (972) 647-4374, Fax (972) 988-8331, or an approved equal.

620.021 Contractor Shop Drawing Submittal (twenty work days prior to first delivery)

At least twenty work days prior to first delivery of material to the site, the Contractor shall submit the following:

1. A sample and specification sheet for the proposed HDPE Geomembrane.

2. A narrative of means, methods and materials for welding to create seams for adjacent sheets of HDPE Geomembrane and to seal penetrations in the HDPE Geomembrane. The sealant material (typically asphalt based, trowel applied mastic or pre-fabricated HDPE boots that are welded to the adjacent HDPE Geomembrane liner) should be compatible for use with the HDPE Geomembrane per the requirements of the membrane manufacturer.

3. Means and methods for attaching/welding HDPE Geomembrane to panel walls, abutments and/or steel sheeting.

A review of the shop drawings or revised shop drawings will be completed by the Department within ten working days of receipt. If revisions are required, the Contractor shall submit the revised shop drawings for review. EPS block shall not be shipped to

the site prior to notification that all shop drawings related to EPS fill have been approved for construction.

CONSTRUCTION REQUIREMENTS

620.03 Placement

The following paragraphs are added:

HDPE Geomembrane shall be placed above the uppermost layer of EPS blocks and sealed to the precast concrete panel walls and other structures as shown on the Contract Drawings.

HDPE Geomembrane deployment shall proceed only when ambient temperatures are between 32°F to 104°F. Geomembrane shall not be placed during precipitation or moisture of any type (e.g., fog, rain, dew), or in the presence of excessive winds, as determined by the Resident. Observation of temperature, humidity, precipitation, and wind should be noted to ensure that the weather conditions are acceptable prior to HDPE Geomembrane placement.

620.04 Overlap and Seams

The following paragraphs are added:

Approved seaming processes are hot shoe fusion and extrusion welding. On side slopes, seams shall be oriented in the general direction of maximum slope, (i.e., oriented down, not across slope). In corners and odd-shaped geometric locations, the number of field seams shall be minimized. Seams shall be aligned with the least possible number of wrinkles and “fishmouths”. If a fishmouth or wrinkle is found, it shall be relieved and cap-stripped.

Geomembrane panels must have finished minimum overlap of four inches for hot shoe fusion welding and three inches for extrusion welding.

Penetrations through the geomembrane panels must be sealed using either asphalt-based mastic or pre-fabricated HDPE boots to provide a tight seal around the penetrating element. Alternative methods for sealing penetrations shall be approved by the Department during the submittal review process.

Cleaning solvents may not be used unless the product is approved by the liner manufacturer.

Field test seams may be conducted on the liner in accordance with the manufacturer's recommendation to verify that seaming conditions are satisfactory.

620.07 Method of Measurement

The words, "HDPE Geomembrane" shall be added after the word "geotextiles" in the first sentence of the first paragraph.

620.08 Basis of Payment

The words, "HDPE Geomembrane" shall be added after the word "geotextiles" in the first sentence of the first paragraph.

Payment will be made under:

Pay Item		Pay Unit
620.6012	HDPE Geomembrane	Square Yard

SPECIAL PROVISIONS
SECTION 621
LANDSCAPE
(Plant Species Specification and Quantities List)

The following list of items provides the estimated quantities for use on this project. The scientific name of the plant material is provided along with the common name in parenthesis.

The contractor shall follow MDOT Standard Specifications Rev. December, 2002 for landscape materials and installation procedures (sec. 621).

The MDOT Landscape Architect or his designee will be available to inspect plant materials and stake the location of plant materials at the time of planting.

In accordance with Section 104.5.9, a separate Performance Bond will not be required for the Landscape portion of this contract.

PLANT MATERIALS

ITEM NO	Description	Unit	Quantity	Total
621.5351	Deciduous Shrubs 15” - 18” Group A	Ea.		72
	Rubus ssp. cult. (Common Raspberry)		36	
	Rubus ssp. cult. (Common Blackberry)		36	
621.5352	Deciduous Shrubs 18” - 24” Group A	Ea.		108
	Spiraea tomentosum (Steeplebrush)		36	
	Spiraea latifolia (Meadowsweet)		36	
	Rhus typhina (Staghorn Sumac)		36	
621.546	Deciduous Shrubs 2’ – 3’ Group A	Ea.		160
	Cornus amomum (Silky Dogwood)		50	
	Aronia melanocarpa (Black Chokeberry)		30	
	Aronia melanocarpa (Purple Chokeberry)		30	
	Rosa virginiana (Pasture Rose)		50	
621.547	Deciduous Shrubs 2’ – 3’ Group B	Ea.		100
	Ilex verticillata Pistillate (Winterberry)		30	
	Ilex verticillata Staminate (Winterberry)		10	
	Myrica pennsylvanica (Bayberry)		30	
	Vaccinium corymbosum ssp. cult. A		15	
	Vaccinium corymbosum ssp. cult. B		15	

* * *

SPECIAL PROVISIONS
SECTION 621.97
ENGINEERED WOODY DEBRIS

(New England Cottontail Brush Piles)

This Special Provision provides a Specification for Engineered Woody Debris Brush Piles to be constructed under the supervision of the Resident Engineer and Staff Biologist.

Engineered Woody Debris Brush Piles shall be constructed by contractor under supervision of MaineDOT Biologist John Perry (207-592-2581) and the Resident Engineer.

Brush Piles are to be spaced 100’ to 150’ apart as located by the Staff Biologist and Resident Engineer.

Logs and brush to be used in construction should be freshly cut mixed hardwood species of maple, oak, birch, apple, shad, and/or similar species and of mixed sizes and lenghths. The woody debris material may be from on-site of off-site origin.

To construct the base lay at least (4) 6’ length logs 6” – 10” diameter parallel to each other and 8”-12” apart to construct a brush pile 10’-15’ in diameter.

Lay an equal number of similarly sized logs on top off and perpendicular to the base layer logs creating a sturdy crisscross structure 12”-20” in height and 10’ – 15’ in diameter.

Arrange smaller branch material of mixed sizes 2”-4” materials crisscrossed to create an intertwining, tangled, domed structure 4’-6’ in height and 10’-15’ in diameter.

Pay Item		Pay Unit
621.97	Engineered Woody Debris	LS (Lump Sum)

* * *

SPECIAL PROVISION
SECTION 636
MECHANICALLY STABILIZED EARTH RETAINING WALL

The following replaces Standard Specification Section 636 in its entirety:

636.01 Description The work under this item shall consist of design, fabrication, furnishing, transportation, and erection of Mechanically Stabilized Earth (MSE) retaining wall system of the required type, including miscellaneous items necessary for a complete installation.

The MSE retaining walls shall consist of reinforcing strips or reinforcing mesh earth wall systems utilizing architectural precast concrete facing panels supported on cast-in-place concrete leveling pads. All reinforcing strips or mesh material shall consist of galvanized steel. The wall structures shall be dimensioned to achieve the design criteria shown on the plans and specified herein.

The MSE retaining walls shall be constructed in accordance with these specifications and in conformity with the lines, grades, design criteria, and dimensions shown on the plans or established by the Geotechnical Engineer.

636.02 Quality Assurance. The MSE retaining wall system shall be one of the approved wall systems noted in the Contract Documents.

All necessary materials, except backfill and cast in-place concrete shall be obtained from the approved system designer.

Mechanically Stabilized Earth (MSE) retaining walls shall be designed and constructed as specified herein. The design shall be subject to review and acceptance by the Geotechnical Engineer. The acceptability of a MSE retaining wall design shall be at the sole discretion of the Geotechnical Engineer. Any additional design, construction or other costs arising as a result of rejection of a retaining wall design by the Geotechnical Engineer shall be borne by the Contractor.

Precast facing panels shall be manufactured in a concrete products plant with approved facilities. Before proceeding with production, precast sample units shall be provided for the Resident's acceptance. These samples shall be kept at the plant to be used for comparison purposes during production.

All calculations and Shop Drawings shall be signed and sealed by a licensed Professional Engineer registered in accordance with the laws of the State of Maine and specializing in geotechnical construction.

The Contractor installing the MSE retaining walls shall have demonstrated experience constructing MSE walls and shall use personnel having demonstrated experience in the installation procedures recommended by the manufacturer and as specified herein.

All MSE walls shall be built in accordance with the plans and accepted shop drawings for the proposed wall systems.

A qualified representative from the wall design-supplier shall be present during construction of the MSE walls. The services of the qualified representative shall be at no additional cost to the project. The qualified experienced technical representative will advise the Contractor and the Resident concerning proper installation procedures.

The vendor's representative shall specify the required back-batter so that the final position of the wall is vertical. Furthermore, footing berms shall be placed in front of the first three (3) levels of panels erected, to maintain verticality.

636.03 Design Requirements The MSE retaining walls shall be designed to provide the grade separation shown on the plans with a service life of not less than 100 years.

The MSE wall system shall be designed in accordance with:

1. The manufacturer's requirements
2. The Contract Plans
3. The requirements specified herein
4. AASHTO LRFD Bridge Design Specifications, current edition
5. AASHTO LRFD Bridge Construction Specifications, current edition
6. FHWA-NHI-00-043, Mechanically Stabilized Earth Walls and Reinforced Soil Slopes Design and Construction Guidelines, March 2001
7. FHWA-NHI-00-044, Corrosion/Degradation of Soil Reinforcements for Mechanically Stabilized Earth Walls and Reinforced Soil Slopes, September 2000

Where conflicting requirements occur, the more stringent requirements shall govern.

The MSE wall design shall follow the general dimensions of the wall envelope shown on the plans. Base of footing elevation shall be as shown on the plans, or may be lower. All wall elements shall be within the right-of-way limits shown on the plans. The panels shall be placed so as not to interfere with drainage or other utilities, or other potential obstructions.

All appurtenances behind in front of, under, mounted upon, or passing through the wall such as drainage structures, utilities, fences, concrete parapet wall or other appurtenances shown on the plans shall be accounted for in the stability design of the wall.

Facing panels shall have tongue and groove, ship lap or similar approved connections along all joints, both vertical and horizontal. Where foundation conditions indicate large differential settlements, vertical full-height slip joints shall be provided. The shape of the panels shall be such that adjacent panels will have continuous, vertical joints, or as noted on the plans.

MSE facing panels shall be installed on cast-in-place concrete leveling pads. The top of the leveling pad shall be located at or below the theoretical leveling pad elevation. The minimum wall embedment shall be 4.0 ft as measured to the top of the leveling pad, or as shown on the plans,

whichever is greater. The top of the face panels shall be at or above the top of the panel elevation shown on the plans. Where coping or barrier is used, the wall face shall extend up into the coping or barrier a minimum of 2 in.

The MSE walls shall be dimensioned so that the factored bearing pressure resistance of the foundation soils, as noted on the plans, is not exceeded. Requirements for over excavation of native foundation soils and replacement with compacted structural fill are detailed on the plans.

The design by the wall system supplier shall consider the stability of the wall as outlined below and in the Contract Documents:

(a) Failure Plane The theoretical failure plane within the reinforced soil mass shall be determined per LRFD Section 11 and be analyzed so that the soil stabilizing components extend sufficiently beyond the failure plane within the reinforced soil mass to stabilize the material. External loads which affect the internal stability such as those applied through piling, bridge footings, traffic, slope surcharge, hydrostatic, and seismic loads shall be accounted for in the design.

(b) External Stability - Load and Resistance Factors Loads and load combinations selected for design shall be consistent with AASHTO LRFD. Application of load factors shall be taken as specified in AASHTO LRFD. Sliding resistance factors and bearing resistance factors shall be consistent with LRFD Section 10. Overturning provisions of LRFD Section 11 shall apply.

MSE walls shall be designed to resist failure by instability of temporary construction slope. Passive pressure in front of the wall mass shall be assumed to be zero for design purposes. The factored applied bearing pressures under the MSE mass for each reinforced length shall be clearly indicated on the design drawing.

(c) Internal Stability - Load and Resistance Factors Evaluation of reinforcement pullout, reinforcement rupture and panel connection pullout or rupture shall be consistent with LRFD Section 11. Loads, load combinations and load factors shall be as specified in LRFD Article 11. Resistance factors for internal design shall be consistent with LRFD Article 11. Maximum reinforcement loads shall be calculated using the Simplified Method approach. Calculations for factored stresses and resistances shall be based upon assumed conditions at the end of the design life. The design life of steel soil reinforcements shall comply with LRFD Section 11.

(d) Backfill and Foundation Soils Parameters. The friction angle of the select backfill used in the reinforced fill zone for the internal stability design of the wall shall be assumed to be 34° unless noted otherwise. The friction angle of the foundation soils and random backfill shall be assumed to be 30° unless otherwise shown on the plans.

(e) Reinforcement Length. The soil reinforcement shall be the same length from the bottom to the top of each wall section. The reinforcement length defining the width of the

entire reinforced soil mass may vary with wall height. The minimum length of the soil reinforcement shall be 8 ft, but shall not be less than 70 percent of the wall height, H, for walls with level surcharges, or 70 percent of H1 for walls with a sloped surcharge or walls supporting an abutment. The mechanical wall height, H or H1, shall be the vertical difference between the top of the leveling footing and the elevation at which the failure surface, as described above, intercepts the ground surface supported by the wall.

(f) Steel Reinforcement For steel reinforcements, all structural connections, tie strips and loop inserts, the following galvanization and carbon steel loss rates shall be assumed:

	Mil./year/side
Zinc galvanizing (first 2 years)	0.58
Zinc galvanizing (subsequent years to depletion):	0.16
Carbon Steel (after zinc depletion to 100 yrs):	0.47

Calculations for factored stresses and resistances in steel reinforcements and connections, including tie-strips and loop inserts, shall be based upon assumed conditions at the end of the design life. (or: The nominal long-term design strength in steel reinforcements and connections, including tie-strips and loop inserts shall be determined at the end of the service life.) The applied factored reinforcement loads shall be calculated in accordance with LRFD Section, and shall be checked against the nominal tensile strength multiplied by a resistance factor per LRFD Table 11.5.6-1. Transverse and longitudinal grid members shall be sized in accordance with ASTM A 185.

When the expected differential settlement normal to the wall exceeds 3 in, the lower level reinforcement facing connections shall be designed to accommodate the increased tensile forces due to settlement.

(g) Facing Panel Requirements

1. Facing panels shall be designed to resist compaction stresses that occur during wall erection.

2. The minimum thickness for concrete panels in the zone of embedded connections shall be 5.5 in and 3.5 in elsewhere. The minimum concrete cover shall be 1.5 in. Facing panels shall meet the design requirements of LRFD 11.10.2.3

3. The wall facing shall be designed to accommodate differential settlements of 1/100 ft.

4. The minimum spacing between adjacent panels shall be ¾ inches in order to accommodate differential settlements without impairing the appearance of the facing or compromising the structural integrity of the individual panels. Joints between

panels shall be no more than 0.75 in. Joint between panels shall have a ship lap configuration or tongue and groove connection. There shall be no openings through the wall facing, except for utilities to pass through the wall. Slip joints to accommodate differential settlement shall be included where shown on the plans.

5. Where wall or wall sections intersect with an angle of 130º or less, a special vertical corner element panel shall be used. The corner element panel shall cover the joint of the panels that abut the corner and allow for independent movement of the abutting panels. Corner elements shall not be formed by connecting standard facing panels that abut the acute corner.

636.04 Materials The Contractor shall be responsible for the purchase or manufacture of the precast concrete facing panels, reinforcing mesh or strips, panel/reinforcement connections, bearing pads, joint filler, and all other necessary components. The Contractor shall furnish to the Resident the appropriate Certificates of Compliance certifying that the applicable wall materials meet the requirements of the project specifications. All materials used in the construction of the MSE retaining walls shall meet the requirements specified in the following subsections of the Maine Standard Specifications and as specified herein.

Materials not conforming to this section of the specifications, or from sources not listed in the contract documents, shall not be used without written consent from the Resident.

636.041 Reinforced Concrete Facing Panels Reinforced concrete facing panels shall meet the requirements specified in the following subsections:

Structural Precast Concrete Units	712.061
Drainage Geotextile	722.02

636.042 Precast Panel Tolerances and Surface Finish Concrete surface for the front face shall have a smooth steel formed finish, or as noted on the plans. The rear face shall have an unformed surface finish. The rear face of the panel shall be roughly screeded to eliminate open pockets of aggregate and surface distortions in excess of ¼ in. All uncoated steel projecting from the panel unit shall be galvanized in accordance with ASTM A 123/A 123M (AASHTO M 111) with a minimum coating thickness of 2 oz/ft^2.

Precast panel tolerances shall comply with the following; units that do not meet the listed tolerances will be rejected.

1. Panel dimensions (edge to edge of concrete) within ±3/16 in.
2. Panel thickness: ± ¼ in.
3. Squareness. The length difference between the two diagonals shall not exceed ½ in.
4. Distance between the centerline of dowel and dowel sleeve, and to centerline of reinforcing steel shall be ± 1/8 in.
5. Face of panel to centerline of dowel and dowel sleeve, and to centerline of reinforcing steel shall be ± 1/8 in.
6. Position of panel connection devices (Tie Strip) shall be ± 1 in.

7. Location of Coil and loop Imbeds shall be ± 1/8 in.
8. Warping of the exposed panel face shall not exceed 1/4 in. in 5 ft.
9. Surface defects on smooth-formed surfaces measured over a length of 5 ft shall not exceed 1/8 in. Surface defects on textured-finished surfaces measured over a length of 5 ft shall not exceed 5/16 in.

636.043 Reinforcing All reinforcing, tie strips, and attachment devices shall be carefully inspected to insure they are true to size and free from defects that may impair their strength and durability.

A. Reinforcing Mesh shall be shop fabricated from cold drawn steel wire conforming to the requirements of AASHTO M 32 (ASTM A 82-97) yield strength minimum of 65 ksi and shall be welded into the finished mesh fabric in accordance with AASHTO M 55 (ASTM A 185). Galvanizing shall be in accordance with AASHTO M 111 (ASTM A 123/A123M) after fabrication. The minimum coating thickness shall be 2 oz/ft^2. Any damage done to the mesh galvanization prior to the installation shall be repaired in an acceptable manner and provide a minimum galvanized coating of 2 oz/ft^2.

B. Reinforcing Strips shall be fabricated from hot rolled bars to the required shape and dimensions. Their physical and mechanical properties shall conform to AASHTO M 223 (ASTM A 572/A572M) Grade 65, or approved equal. Reinforcing strips shall be hot dipped galvanized in accordance with AASHTO M 111 (ASTM A 123/A123M) after fabrication. The minimum galvanization coating thickness shall be 2 oz/ft^2. Any damage done to the mesh galvanization prior to the installation shall be repaired 2 oz/ft^2.

C. Tie strips shall be fabricated of hot rolled steel conforming to ~~ASTM A570~~ ASTM A 1011/A1011M, Grade 50 or equivalent. Tie strips shall be hot dipped galvanized in accordance with AASHTO M 111 (ASTM A 123/A123M) after fabrication. The minimum coating thickness shall be 2 oz/ft^2.

D. The tie strips and reinforcing strips shall be cut to lengths and tolerances shown on the submitted plans. Holes for bolts shall be punched in the locations shown.

636.044 Attachment Devices

A. Steel clevis loop embeds shall be fabricated of cold drawn steel wire conforming to ASTM A 510, UNS G 10350 or AASHTO M 32 (ASTM A 82). Loop embeds shall be welded in accordance with AASHTO M 55 (ASTM A 185). Both shall have electrodeposited coatings of zinc applied in accordance with ASTM B 633.

B. Fasteners shall consist of hexagonal cap screw bolts and nuts, which are galvanized and conform to the requirements of AASHTO M 164 (ASTM A 325) or equivalent.

C. Connector pins and mat bars shall be fabricated from AASHTO M 183 (ASTM A 36/A36M) steel and welded to the soil reinforcement mats as shown on the plans.

Galvanization shall conform to AASHTO M111 (ASTM A 123/A123M) with a minimum coating thickness of 2 oz/ft^2. Connector bars shall be fabricated of cold drawn steel wire conforming to the requirements of ASTM A 82 (AASHTO M 32) and galvanized in accordance with ASTM A 123/A123M.

D. Structural plate connectors and fasteners used for yokes to connect reinforcements to wall panels around pile or utility conflicts shall conform to the material requirements for reinforcing strips and fasteners in 677.042 (c).

636.045 Joint Materials Joint material shall be installed to the dimensions and thicknesses specified below, or in accordance with the plans or approved shop drawings.

A. Provide flexible foam strips for filler for vertical joints between panels, and in horizontal joints where pads are used.

B. Provide in horizontal joints between panels either preformed EPDM rubber pads conforming to ASTM D 2000 for 4AA, or 812 rubbers or neoprene elastomeric pads having a Durometer Hardness of 55±5, or high density polyethylene pads with a minimum density of 0.946 g/cm3 in accordance with ASTM D 1505

636.046 Nonwoven Drainage Geotextile Cover all joints between panels on the back side of the wall with a geotextile fabric meeting the minimum requirements of 722.02 Class 2. Slit film and multifilament woven and resin bonded woven geotextile fabrics are not allowed for this application. The minimum width of the fabric shall be 12 in. Lap fabric at least 12 in. where splices are required. Nonwoven Drainage Geotextile shall be bonded with an approved adhesive compound to the back face covering all joints between panels. Adhesives used to hold the geotextile filter fabric material to the rear of the facing panels prior to backfill placement shall be supplied by the wall supplier and approved by the Resident.

636.047 Concrete Leveling Pad The cast-in-place leveling pad shall be constructed of Class B concrete conforming to the requirements of Section 502 - Structural Concrete. Leveling pad shall have minimum dimensions of 6 in thickness and 12 in width and be placed at the design elevation shown on the shop drawings within a 1/8 in tolerance.

636.048 Backfill Materials All backfill materials used in the MSE Walls volume shall conform to Gravel Borrow conforming to the requirements of Section 703.20, with and the following additional requirements:

A. The maximum aggregate size is limited to 4 in (U.S Sieve Size - 102 mm)

B. Soundness The material shall be substantially free of shale or other soft, poor durability particles. The materials shall have a magnesium sulfate soundness loss, as determined by AASHTO T104 (ASTM C 88), of less than 30 percent after four cycles.

C. Electrochemical Requirements The backfill materials shall meet the following criteria:

Requirements		Test Methods
Resistivity	>3,000 ohm-centimeters	AASHTO T 288
pH between	Between 5 and 10, inclusive	AASHTO T 289
Chlorides	<100 parts per million	AASHTO T 291
Sulfates	<200 parts per million	AASHTO T 290
Organic Content	<1%	AASHTO T 267-86

D. The plasticity index (PI) as determined by AASHTO T90 shall not exceed 6.

E. The select backfill material shall exhibit an angle of internal friction of not less than 34 degrees, as determined by the standard Direct Shear Test, AASHTO T236 (ASTM D3080-72), on the portion finer than the 2 mm [#10 sieve], compacted to 95 percent of AASHTO T99, Methods C or D (with oversized correction as outlined in Note 7) at optimum moisture content. No testing is required for backfills where 80 percent of sizes are greater than 3/4 in. (19 mm) Before construction begins, the borrow material selected shall be subject to show conformance with this frictional requirement. Compliance with the test requirements shall be the responsibility of the Contractor, who shall furnish a copy of the backfill test results prior to construction.

636.049 Crushed Stone for Abutment Foundation Crushed stone for use in the foundation layer below the abutment shall be crushed stone conforming to the requirements of MaineDOT Standard Specification Section 703.31.

636.050 Impervious Membrane An impervious geomembrane shall be installed near the top of the reinforced backfill to reduce the chance of water infiltrating into the reinforced backfill. The geomembrane shall be bonded to the inside face of the wall panels and extend perpendicularly from the wall face into the fill, while being parallel to the top of the wall. The membrane should be sloped to drain away from the facing and outlet beyond the reinforcing zone. The impervious geomembrane shall extend into the fill a distance of 1 ft beyond the MSE reinforcement. The geomembrane shall have a minimum thickness of 0.76 mm, 30 mil (0.03 in, 1/32 in)

The geomembrane shall have both sides textured with a rough finish to improve resistance against sliding. The texture shall be approved by the Resident before installation. The geomembrane shall be shown on the design drawings of the MSE submittal of the Contractor.

636.051 Acceptance of Material The Contractor shall furnish to the Resident a Certificate of Compliance certifying that the above materials comply with the applicable contract specifications including the backfill material, in accordance with Section 700. A copy of all test results performed by the Contractor necessary to assure contract compliance shall also be furnished to the

Resident. Acceptance will be based on the Certificate of Compliance, accompanying test reports, and visual inspection by the Resident.

636.06 Submittals

A. Design computations demonstrating compliance with the criteria specified herein and shown on the plans, shall be prepared, signed and stamped by a licensed Professional Engineer licensed in the State of Maine and specializing in geotechnical engineering. Design calculations that consist of computer generated output shall be supplemented with at least one hand calculation and graphic demonstrating the design methodology used. Design calculations shall provide thorough documentation of the sources of equations used and material properties.

The design calculations shall include:

1. Statement of all assumptions made and copies of all references used in the calculations.

2. Analyses demonstrating compliance with all applicable earth, water, surcharges, seismic, or other loads, as specified herein and required by AASHTO LRFD.

3. Analyses or studies demonstrating durability and corrosion resistance of retaining wall systems for the proposed location and environment. The designer shall provide all corrosion protection devices necessary for the retaining wall to have a minimum service life of 100 years in the proposed location and environment.

B. A detailed resume of the wall designer listing similar projects with references, and demonstrating necessary experience to perform the MSE retaining wall design, including a brief description of each project that is similar in scope.

C. A detailed listing of MSE walls that the Contractor has constructed including a brief description of each project and a listing of personnel who will construct the walls demonstrating their experience in construction of MSE retaining walls. A reference shall be included for each project listed. As a minimum, the reference shall include an individual's name, address and current phone number.

D. Manufacturer's product data for the MSE wall system, including material, manufacture and erection specifications, all specified erection equipment necessary, details of buried MSE wall elements, special details required of reinforcing layout around drainage structures and sign foundations, structures design properties, type of backfill and details for connections between facing panels.

E. Details of precast yard and concrete mix design.

F. Shop drawing showing the configuration and all details, dimensions, quantities and cross sections necessary to construct the MSE wall, including but not limited to the following:

1. A plan view of the wall, which shall include Contract limits, stations and offsets, and the face of wall line shown on the plans.
2. An elevation view of the wall which shall include the elevation at the top of the wall at all horizontal and vertical break points and at least every 50 ft along the face of the wall, all steps in the leveling pads, the designation as to the type of retaining wall system(s), and an indication of the final ground line and calculated factored bearing pressures. The face of wall shown on the plans shall be indicated.
3. A typical cross section or cross sections showing the elevation relationship between existing ground conditions and proposed grades, and the proposed wall configuration, including details for the proposed methods for connecting to existing conditions. The sections shall also indicate the location of the face of wall shown on the plans.
4. General notes pertaining to design criteria and wall construction.
5. A listing of material quantities for each wall.
6. Details of sleeves and pipes and other embedded items to be installed through the walls.
7. Clearly indicated details for construction of walls or reinforcing elements around drainage, foundations, utilities or any other potential obstructions.
8. Details of the architectural treatment of facing panels.
9. Drainage design detail and design scheme.
10. Location of utilities.
11. Sequence and schedule of construction, including overall construction schedule.
12. Methods of excavation and backfill.
13. Method of maintaining stability of excavated trenches.
14. Method of monitoring plumbness and deviation of wall.
15. Excavation support system, if any.
16. Any acceptance testing and frequency.
17. Details and location of all necessary construction and expansion joints along the wall.
18. Connection details at the interface of the wall and any adjacent proposed cast in place retaining wall or abutment structure.
19. Details of impermeable membrane connection to abutment in roadway runoff collection system.

636.07 Delivery, Storage and Handling

A. Contractor shall check the material upon delivery to assure that the proper material has been received. A product certification should be provided with each shipment.

B. Material shall be stored above -20º F

C. Contractor shall prevent excessive mud, wet cement, epoxy and like substances which may affix themselves to the material from coming in contact with the material.

D. Material may be laid flat and stored outside for 30 days. For extended storage, material shall be stored in or beneath a trailer or covered with a colored tarpaulin to prevent long-term exposure.

636.08 Wall Excavation The excavation and use as fill disposal of all excavated material shall meet the requirements of Section 203 - Excavation and Embankment, except as modified herein. Temporary excavation support as required shall be the responsibility of the contractor.

636.09 Foundation Preparation. The foundation for the structure shall be graded level for a width equal to the length of reinforcement elements plus 5 ft, or as shown on the plans. Prior to wall construction the foundation shall be compacted with at least 10 passes of a smooth wheel vibratory roller weighing at least 10,000 lbs. Any foundation soils found to be unsuitable or incapable of sustaining the required compaction shall be removed and replaced with Special Borrow Material. The foundation for the structure shall be approved by the Resident before erection is started.

A concrete leveling pad shall be constructed as indicated on the submitted plans. The leveling pad shall be cast to the design elevations as shown on the plans. Allowable elevation tolerances are +0.01 ft and -0.02 ft from the design elevations. Placement of wall panels may begin after 24 hours curing time of the concrete leveling pad.

636.10 Wall Erection A field representative from the proprietary wall system being used shall be available, as needed, during the erection of the wall. The services of the representative shall be at no additional cost to the project.

Precast concrete panels shall be placed so that their final position is vertical or battered as shown on the plans. The vendor representative shall specify the required back-batter so that the final position of the wall is vertical. Earth berms at the footing shall be placed to maintain the desired position of panels. For erection, panels are handled by means of lifting devices connected to the upper edge of the panel. Panels should be placed in successive horizontal lifts in the sequence shown on the approved shop drawings as backfill placement proceeds. As backfill material is placed behind the panels, the panels shall be maintained in position by means of temporary wedges or bracing according to the wall supplier's recommendations.

Concrete facing vertical tolerances and horizontal alignment tolerances shall not exceed ¾ inch when measured with a 10 ft straightedge (¼ in/yd). During construction, the maximum allowable offset in any panel joint shall be ¾ in. The overall vertical tolerance of the wall (from top to bottom) shall not exceed ½ inch per 10 ft of wall height.

636.11 Backfill Placement Backfill shall not be placed between November 1st and April 1st. Backfill placement shall closely follow erection of each course of panels. Backfill shall be

placed and compacted in such a manner as to avoid any damage or disturbance of the wall materials or misalignment of the facing panels or reinforcing elements. Any wall materials which become damaged during backfill placement shall be removed and replaced at the Contractor's expense. Any misalignment or distortion of the wall facing panels due to placement of backfill outside the limits of this specification shall be corrected by the Contractor at his expense. Prior to the placement of the soil reinforcement, the backfill elevation after compaction shall be at the required elevation of the reinforcements. At each reinforcement level, the backfill shall be placed to the level of the connection. Backfill placement methods near the panels shall assure that no voids exist directly beneath the reinforcing element.

Gravel borrow backfill shall be compacted in accordance with Subsection 203.12 except that the minimum required compaction shall be 92 percent of maximum density as determined by AASHTO T180, Method C or D (with oversize correction, as outlined in Note 7 of that test). If 30 percent or more of the backfill material is greater than 19 mm [3/4 in] in size, AASHTO T180 is not applicable, and the acceptance criterion for control of compaction shall be either a minimum of 70 percent of the relative density of the material as determined by ASTM D4253 and D4254, or a method of compaction consisting of at least 4 (four) passes by a heavy roller.

Where spread footings support bridge or other structural loads, the top 5 ft below the bottom of footing elevation shall be compacted to 98 percent of the maximum density as determined by AASHTO T180, Method C or D (with oversize correction, as outlined in Note 7 of that test).

The moisture content (determined in accordance with AASHTO T180, Method C or D) of the backfill material prior to and during compaction shall be uniformly distributed throughout each layer. Backfill materials shall have be placed at a moisture content not more than 2 percentage points less than or equal to the optimum moisture content. Backfill material with a placement moisture content in excess of the optimum moisture content shall be removed and reworked until the moisture content is uniformly acceptable throughout the entire lift.

At each reinforcing level, backfill shall be leveled before placing and bolting the reinforcing. The maximum lift thickness after compaction shall not exceed 12 in. The Contractor shall decrease this lift thickness, if necessary, to obtain the specified density.

Heavy compaction equipment shall not be used to compact backfill within 3 ft of the wall face. Compaction within 3 ft of the back face of the wall shall be achieved by at least three (3) passes of lightweight mechanical tamper, lightweight roller, or vibratory system. The specified lift thickness shall be adjusted as warranted by the type of compaction equipment actually used. No vehicular equipment shall be operated within 3 ft of the panels.

The frequency of sampling of the backfill material necessary to assure gradation control throughout construction shall be as directed by the Resident.

At the end of each day's operation, the Contractor shall slope the last level of the backfill away from the wall facing to rapidly direct runoff away from the wall face. In addition, the Contractor shall not allow surface runoff from adjacent areas to enter the wall construction site.

636.12 Reinforcement Placement Prior to placing the first layer of reinforcements (strips, mats or grids), backfill shall be placed and compacted in accordance with Subsection 677.11, Backfill Placement.

Bending of reinforcements in the horizontal plane resulting in a permanent deformation in their alignment shall not be allowed. Gradual bending in the vertical direction that does not result in permanent deformations is allowable.

Cutting of longitudinal or transverse reinforcement bars to avoid conflicts with utility obstructions or piles will not be allowed. A structural connection (yokes) from the wall panel to the reinforcement shall be used whenever it is necessary to avoid cutting or excessive skewing of reinforcement due to pile or utility conflicts.

Soil reinforcements shall be placed normal to the face of the wall, unless otherwise shown on the plans or directed by the Resident. If skewing of the soil reinforcements is required due to obstructions in the reinforced fill, rotatable bolted connections shall be used and the maximum skew angle shall not exceed 15º from the normal position except in the case of acute corner where redundant reinforcements are used. The tensile capacity of splayed reinforcement shall be reduced by the cosine of the splay angle.

636.13 Method of Measurement Mechanically Stabilized Earth Retaining Wall will be measured by the square foot of face area computed using the plan dimensions. No adjustment in the pay quantity will be made if the computed quantity, based on the working drawings, varies from the plan quantity.

Vertical dimension limits will be from the top of leveling pad to the top of the wall facing units, as shown on the plans. The horizontal dimension limits will be from the edges of the facing units at each end of a wall, as shown on the plans. No field measurements will be made unless the Resident specifies, in writing, a change to the limits indicated on the plans.

The wall surface area, as shown on the plans, includes the surface area of nominal panel joint openings and wall penetrations such as pipes and other utilities.

636.14 Basis of Payment The accepted quantity of Mechanically Stabilized Earth Retaining Wall will be paid for at the contract unit price per square foot. Payment shall be full compensation for design, fabrication and erection of MSE retaining walls, furnishing all labor, equipment and materials including concrete face panels, fasteners, reinforcing mesh, reinforcing strips, tie strips, hardware, joint fillers, coping, woven drainage geotextile, impervious membrane, select granular backfill and technical field representative. Cost of cast-in-place concrete for leveling pad will not be paid for separately but will be considered incidental to the Mechanically Stabilized Earth Retaining Wall.

Excavation, including extra excavation due to unsuitable foundation material, will be measured and paid for under Item 203.20 - Common Excavation. Foundation material and select

backfill material will be considered incidental to the Mechanically Stabilized Earth Retaining Walls.

The unit price for Mechanically Stabilized Earth Wall shall include costs for:

1. All design work, preparation of written submittals and plans, revision of submittals, sample submittals and any other necessary preliminary work prior to and after acceptance of the retaining wall by the Resident.

2. All materials, including transportation, for the MSE walls, including facing panels, MSE reinforcing elements, attachment devices, fasteners, bearing blocks and shims, joint materials, copings, vertical corner elements, concrete masonry, reinforcing steel, crushed stone, select backfill and incidentals.

3. All labor and equipment required to excavate and prepare the wall foundation, form and cast the leveling pad, erect the MSE wall to the lines and grades shown on the plans, place and compact backfill, place and compact the drainage layer, and construct any other items necessary to complete the MSE wall.

4. All temporary sheeting, temporary excavation, and temporary dewatering necessary to perform the other work in this section.

There will be no allowance for excavating and backfilling for the Mechanically Stabilized Earth Retaining Wall beyond the limits shown on the approved submitted plans, except for excavation required to remove unsuitable subsoil in preparation for the foundation.

Payment will be made under:

Pay Item		Pay Unit
636.40	Mechanically Stabilized Earth Retaining Wall	Square foot

SPECIAL PROVISION
SECTION 652
MAINTENANCE OF TRAFFIC

Section 652 - Maintenance of Traffic, of the Standard Specifications is ammended as follows:

652.3.6 Traffic Control The Contractor shall provide a minimum paved roadway width of 22 ft on the approaches for two-way traffic at all times with the exception that when work is being done on the approaches such that Route 100/26 must be reduced to one paved 11 ft lane shall be provided for two-way one-lane alternating traffic controlled by flaggers. Route 100/26 shall not be reduced to one lane for any more than thirty-six (36) days and only during the daytime hours from 9:00 am to 3:00 pm for the entire contract period. For the purpose of computing the number of days the route is reduced to one lane any date the contractor closes a lane for four hours or less, ½ day of the thirty-six (36)days has elapsed, any date the contractor closes the route for more than four hours the entire day shall be counted against the thirty-six (36)day limit. The existing travelway width shall be maintained to the maximum extent practical. Vertical panel markers, drums, cones, or striping shall be used to clearly delineate the roadway through the construction area. Two-way traffic operation shall be provided at all times that the Contractor is not working on the project. Two-way traffic alternating in one lane shall be controlled through work areas by flaggers, utilizing radios, field telephones, or other means of direct communication.

The traffic control devices shall be moved or removed as the work progresses to assure compatibility between the uses of the traffic control devices and the traffic flow. Traffic control devices that become unnecessary shall be immediately removed from use.

In order to maintain two way traffic on the approaches it is anticipated that the contractor will need to shore the new approach fill with temporary shoring. Portions of the temporary shoring are to be left in-place as specified on the plans. The shoring shall be designed in accordance with Special Provision 501 Sheet Piling and will be paid under Item 501.30 Steel Sheet Piling.

Pavement markings shall be altered as required to conform to the existing traffic flow pattern. Repainting of pavement marking line, if required by Resident, to maintain the effectiveness of the line, shall be considered maintenance of traffic control devices. No separate payment will be made. Inappropriate existing pavement markings shall be removed whenever traffic is rerouted, and temporary construction pavement markings shall be placed. Obliteration and removal of non-applicable markings and placement of temporary construction pavement markings shall be considered maintenance of traffic control devices and will be paid for under the appropriate Contract item. Traffic changes shall not be made unless there is sufficient time, equipment, materials, and personnel available to complete the change properly before the end of the workday.

SPECIAL PROVISION
SECTION 652
MAINTENANCE OF TRAFFIC
(Traffic Control)

Failure by the contractor to follow the Contracts 652 Special Provisions and Standard Specification and/or The Manual on Uniform Traffic Control Devices (MUTCD) and/or The Contractors own Traffic Control Plan will result in a violation letter and result in a reduction in payment as shown in the schedule below. The Departments Resident or any other representative of The Department reserves the right to suspend the work at any time and request a meeting to discuss violations and remedies. The Department shall not be held responsible for any delay in the work due to any suspension under this item. Any reduction in payment under this Special Provision will be in addition to forfeiting payment of maintenance of traffic control devices for that day.

ORIGINAL CONTRACT AMOUNT

from	Up to and	Amount of Penalty
More Than	**Including**	**Damages per Violation**
$0	$100,000	$250
$100,000	$300,000	$500
$300,000	$500,000	$750
$500,000	$1,000,000	$1,500
$1,000,000	$2,000,000	$2,500
$2,000,000	$4,000,000	$5,000
$4,000,000	and more	$10,000

April 17, 2007
Supersedes May 10, 2006

SPECIAL PROVISION
SECTION 652
MAINTENANCE OF TRAFFIC
Construction Sign Sheeting Material

Super high intensity fluorescent retroreflective sheeting, ASTM D 4956 - Type VII, Type VIII, or Type IX (prismatic), is required for all construction signs.

SPECIAL PROVISION
SECTION 656
Temporary Soil Erosion and Water Pollution Control

The following is added to Section 656 regarding Project Specific Information and Requirements. All references to the Maine Department of Transportation Best Management Practices for Erosion and Sedimentation Control (a.k.a. Best Management Practices manual or BMP Manual) are a reference to the latest revision of said manual. The latest version is dated "February 2008" and is available at:

http://www.maine.gov/mdot/environmental-office-homepage/surface-water-resources.php

Procedures specified shall be according to the BMP Manual unless stated otherwise.

Project Specific Information and Requirements

The following information and requirements apply specifically to this Project. The temporary soil erosion and water pollution control measures associated with this work shall be addressed in the Soil Erosion and Water Pollution Control Plan (SEWPCP.)

1. Newly disturbed earth shall be mulched by the end of each workday. Mulch shall be maintained on a daily basis.

2. The SEWPCP shall describe the location and method of temporary erosion and sediment control for existing and proposed catch basins, outlet areas and culvert inlets and outlets.

3. **If water is flowing within the drainage system, the water shall be diverted to a stable area or conduit and work shall be conducted in the dry.** The Contractor's plan shall address when and where the diversions will be necessary.

4. Dust control items other than those under Standard Specification 637, if applicable, shall be included in the plan.

5. Permanent slope stabilization measures shall be applied within one week of the last soil disturbance. Temporary slope stabilization is required on a daily basis.

6. Permanent seeding shall be done in accordance with *Special Provision, Section 618, Seeding* unless the Contract states otherwise.

7. Culvert inlet and outlet protection shall be installed within 48 hours of culvert installation, or prior to a storm event, whichever is sooner.

SPECIAL PROVISION
SECTION 656
Temporary Soil Erosion and Water Pollution Control

8. Temporary winter stabilization must be used between November 1st and April 1st or outside of that time period if the ground is frozen or snow covered. Temporary winter stabilization involves, at a minimum, covering all disturbed soils and seeded ground that is not Acceptable Work with an approved method. If temporary winter stabilization practices are used then spring procedures for permanent stabilization shall also be described in the SEWPCP. Use of these methods for over-winter temporary erosion control will be incidental to the contract and be paid for as part of Pay Item 656.75.

9. Demolition debris (including debris from wearing surface removal, saw cut slurry, dust, concrete debris, etc.) shall be contained and shall not be allowed to discharge to any resource. All demolition debris shall be disposed of in accordance with *Standard Specifications, Section 202.03, Removing Existing Superstructure, Structural Concrete, Railings, Curbs, Sidewalks and Bridges*. Containment and disposal of demolition debris shall be addressed in the Contractor's SEWPCP.

10. If a cofferdam sedimentation basin is used, it shall be located in an upland area where the water can settle and sink into the ground or be released slowly to the resource in a manner that will not cause erosion. The location of such a cofferdam sedimentation basin shall be addressed in the SEWPCP.

11. Prior to release to a natural resource, any impounded water that has been in contact with concrete placed during construction must have a pH between 7.0 and 8.5, must be within one pH unit of the background pH level of the resource and shall have a turbidity no greater than the receiving resource. This requirement is applicable to concrete that is placed or spilled (including leakage from forms) as well as indirect contact via tools or equipment. Water not meeting release criteria shall be addressed in the SEWPCP. Discharging impounded water to the stream must take place in a manner that does not disturb the stream bottom or cause erosion.

12. The Contractor shall be responsible for monitoring pH with a calibrated meter accurate to 0.1 units. A record of pH measurements shall be kept in the Environmental Coordinator's log (Section 656.4.4.)

SPECIAL PROVISION
SECTION 703
AGGREGATES

Replace subsections 703.25 through 703.28 with the following:

703.25 Stone Fill Stones for stone fill shall consist of hard, sound, durable rock that will not disintegrate by exposure to water or weather. Stone for stone fill shall be angular and rough. Rounded, subrounded, or long thin stones will not be allowed. Stone for stone fill may be obtained from quarries or by screening oversized rock from earth borrow pits. The maximum allowable length to thickness ratio will be 3:1. The minimum stone size (10 lbs) shall have an average dimension of 5 inches. The maximum stone size (500 lbs) shall have a maximum dimension of approximately 36 inches. Larger stones may be used if approved by the Resident. Fifty percent of the stones by volume shall have an average dimension of 12 inches (200 lbs).

703.26 Plain and Hand Laid Riprap Stone for riprap shall consist of hard, sound durable rock that will not disintegrate by exposure to water or weather. Stone for riprap shall be angular and rough. Rounded, subrounded or long thin stones will not be allowed. The maximum allowable length to width ratio will be 3:1. Stone for riprap may be obtained from quarries or by screening oversized rock from earth borrow pits. The minimum stone size (10 lbs) shall have an average dimension of 5 inches. The maximum stone size (200 lbs) shall have an average dimension of approximately 12 inches. Larger stones may be used if approved by the Resident. Fifty percent of the stones by volume shall have an average dimension greater than 9 inches (50 lbs).

703.27 Stone Blanket Stones for stone blanket shall consist of sound durable rock that will not disintegrate by exposure to water or weather. Stone for stone blanket shall be angular and rough. Rounded or subrounded stones will not be allowed. Stones may be obtained from quarries or by screening oversized rock from earth borrow pits. The minimum stone size (300 lbs) shall have minimum dimension of 14 inches, and the maximum stone size (3000 lbs) shall have a maximum dimension of approximately 66 inches. Fifty percent of the stones by volume shall have average dimension greater than 24 inches (1000 lbs).

703.28 Heavy Riprap Stone for heavy riprap shall consist of hard, sound, durable rock that will not disintegrate by exposure to water or weather. Stone for heavy riprap shall be angular and rough. Rounded, subrounded, or thin, flat stones will not be allowed. The maximum allowable length to width ratio will be 3:1. Stone for heavy riprap may be obtained from quarries or by screening oversized rock from earth borrow pits. The minimum stone size (500 lbs) shall have minimum dimension of 15 inches, and at least fifty percent of the stones by volume shall have an average dimension greater than 24 inches (1000 lbs).

Add the following paragraph:

703.32 Definitions (ASTM D 2488, Table 1).

Angular: Particles have sharp edges and relatively plane sides with unpolished surfaces
Subrounded: Particles have nearly plane sides but have well-rounded corners and edges
Rounded: Particles have smoothly curved sides and no edges

SPECIAL PROVISION
SECTION 711
MISCELLANEOUS BRIDGE MATERIAL

Add the following paragraph to 711.10 H-Beam Pile Tips:

Steel H-beam pile splicers shall be ASTM A572, Grade 50 minimum. Splices shall be the Champion HP-30000, or approved equivalent, mechanical splicer. Evaluation of equivalent products will be based on the submission of data demonstrating that the capability of transferring the full pile strength in compression and tension and developing the bending moment capacity of the pile in both the x-x and y-y axis. The splicers shall be installed and welded as recommended by the manufacturer. Welding shall not be done when the temperature in the immediate vicinity of the weld is below 0°F; when the surfaces are damp or exposed to the rain, snow or high wind; or when the welders or welding operators are exposed to inclement conditions. The pile shall be preheated to and maintained at 150°F minimum within 6 inches from the weld during welding. Welders shall be prequalified in accordance with Section 504 – Structural Steel.

CONSTRUCTION MANUAL

(If full penetration weld is proposed)

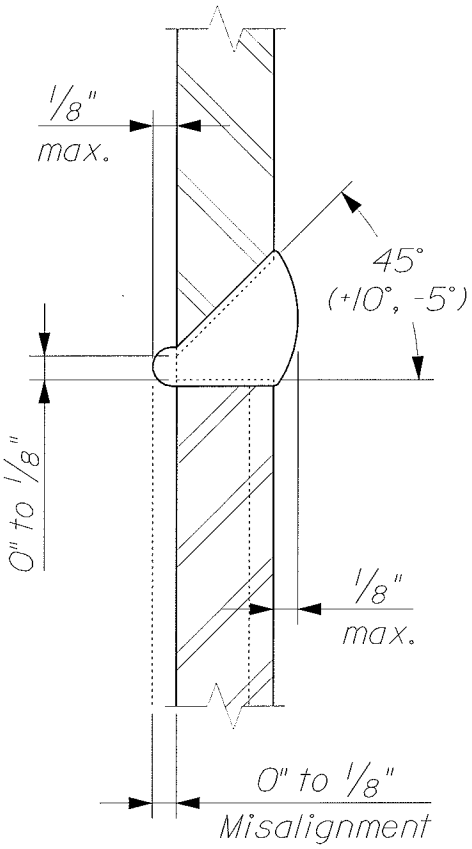

~ PILE VERTICAL POSITION ~

(Horizontal Weld)

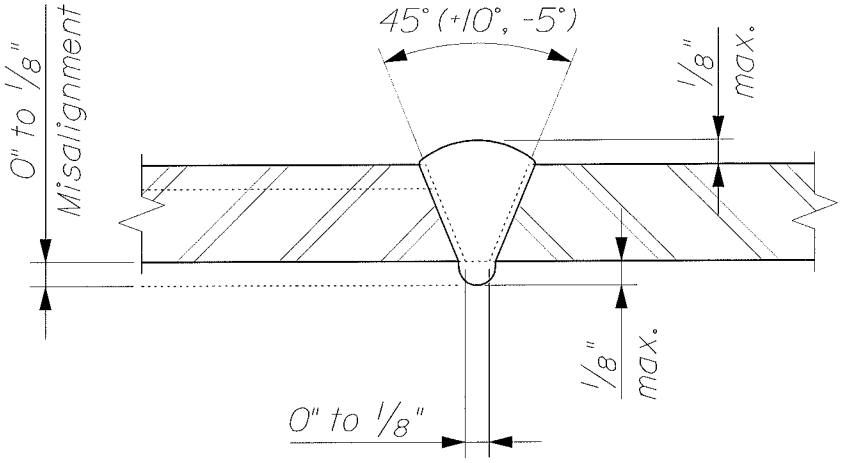

~ PILE HORIZONTAL POSITION ~

(Flat or vertical weld)

NOTES:

1. A mechanical guide shall be used for all cuts.

2. Unless a different process has been approved by the Fabrication Engineer, SMAW or FCAW shall be used.

3. All welding shall be in accordance with A.W.S. Specification D1.1.

4. Gouge backweld root to sound metal before welding the second side.

ALTERNATE PILE SPLICE

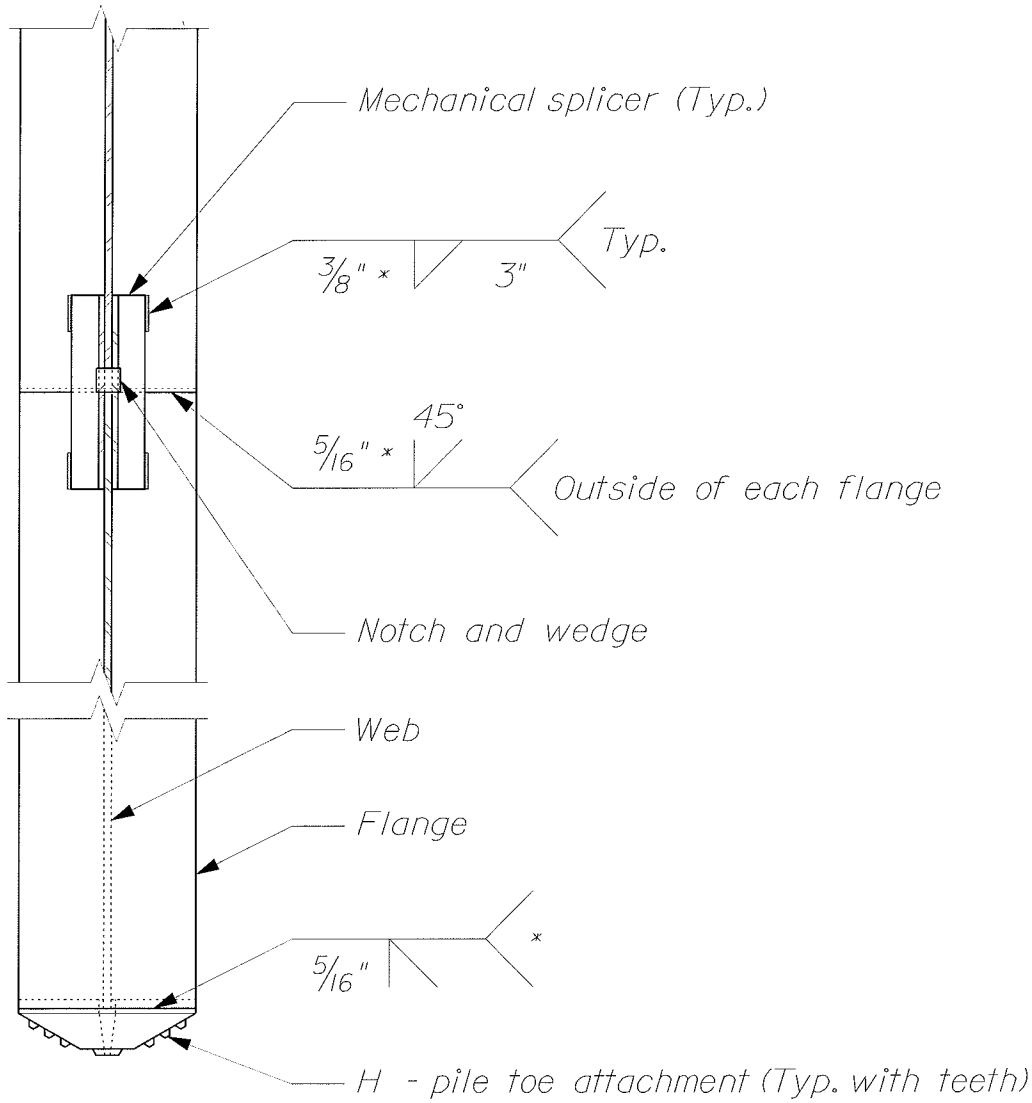

H - PILE DETAIL

* Or as specified by the manufacturer

NOTES:

1. All welding shall be in accordance with Standard Specifications Section 501, Foundation Piles and A.W.S. Structural Welding Code - Steel D1.1.

2. H - pile toe attachment shall be approved by the Resident.

3. H - pile mechanical splices shall be approved by the Reisident.

SPECIAL PROVISIONS
SECTION 717.03
LANDSCAPE

(Wildlife Seed Mix)

This Special Provision provides a Seed Mix to be used for This Seed Mix is to be used in selected areas as directed by the resident. The contractor shall follow MDOT Standard Specifications Rev. December, 2002 for landscape materials and hydroseeding installation procedures (sec 621). ERNMX-138

20.00%	Carex Vulpinoidea	Fox Sedge
15.00%	Cornus amomum	Silky Dogwood
15.00%	Cornus racemosa	Grey Dogwood
10.00%	Elymus virginicus	Virginia Wild Rye
8.00%	Viburnum recognitum	Arrow Wood
5.00%	Carex lupulia	Hop Sedge
5.00%	Carex lurida	Lurid (Shallow) Sedge
4.00%	Lindera benzoin	Spicebush
4.00%	Viburnum lentago	Nannyberry
3.00%	Aralia spinosa	Hercules' Club
3.00%	Carex comosa	Cosmos (Bristly) Sedge
3.00%	Rosa palustris	Swamp Rose
3.00%	Spiraea tomentosa	Steeple Bush
2.00%	Carex stipata	Awl Sedge

Seeding Rate: 15 lb per acre, or 1/3-1/2 lb per 1,000 sq ft

This mix shall be applied by hydroseeding at the rate of 1/2 lb per unit (1,000 sq. ft.).

This method shall be hydroseeded with fiber mulch, fertilizer and lime per Standard Specifications. These materials shall be included in and incidental to the seeding cost.

717.03 Seed All seed shall be certified as to mixture, germination, purity, and live seed.

A. Percent germination > 80 %
B. Pure live seed > 85 %
C. Percent Purity > 85 %
D. Weed seed <1 %
E. All seed shall be from the current years crop unless recent tests by an approved testing agency demonstrate the approved requirements.

* * *

b

Document #	Title	Page
	DIVISION 1 - GENERAL REQUIREMENTS	
01001	Description of Work	2
01035	Control of Work	4
01151	Measurement and Payment	6
01310	Submittals	10
01710	Cleanup	11
	DIVISION 2 - SITE WORK	
02217	Excavation and Backfill for Water Mains	12
02219	Bedding and Backfill Material	19
02536	Temporary Water Systems	21
02537	Ductile Iron Water Pipe and Fittings	24
02540	Bridge Supported D.I. Water Main	28
02594	Pressure and Leakage Testing of D.I. Water Mains	32
02595	Disinfection of Water Mains	34
02999	Water Main Materials Specifications:	
	Bolts and Nuts	37
	Cast Iron or Ductile Iron Split Repair Sleeve	38
	Corporation Stops	30
	Curb Stops	40
	Cut-In Sleeve	41
	Ductile Iron Fittings	42
	Ductile Iron Pipe	43
	Fire Hydrant	44
	Pipe Joint Restrainer	46
	Polyethylene Encasement	47
	Resilient Seat Gate Valve	48
	Insertion Gate Valve	50
	Expansion Joint	51
	Restrained Joint Gaskets	52
	Service Box and Rod	53
	Service Saddles	54
	Stainless Steel Repair Clamps	56
	Tapping Sleeves	57
	Valve Boxes	59

SECTION 01001 - DESCRIPTION OF WORK

PART 1: GENERAL

1.1 SCOPE:

A. The CONTRACTOR shall furnish and install ductile iron water main, related piping and appurtenances, as shown on the drawings and specified herein.

B. The CONTRACTOR shall install and maintain temporary water systems as indicated on the drawings and specified herein.

C. The CONTRACTOR shall perform leakage and pressure tests and disinfect the installed water main as specified herein.

1.2 DUTIES OF THE OWNER / PORTLAND WATER DISTRICT:

A. The OWNER / PORTLAND WATER DISTRICT will locate the terminal points of the work and will also locate any of its facilities lying in close proximity which would in any way be a hazard to the CONTRACTOR'S operations.

B. The OWNER / PORTLAND WATER DISTRICT will operate any valves or hydrants which may be found desirable or necessary to be used for any purpose.

C. The OWNER will notify customers of all work involving temporary shutdown of service.

1.3 DUTIES OF THE CONTRACTOR:

A. The CONTRACTOR will familiarize himself with all obstructions which he can foresee, including but not limited to existing pipes, services, conduits, ducts, sewers, wires, cables, utility poles, signs or any other such obstructions which might interfere with the construction, and he agrees to make arrangements with the owners of such facilities so as to save the OWNER / PORTLAND WATER DISTRICT harmless from any damages thereto caused by his operations and to make whatever arrangements might be necessary to move or remove and replace these facilities so as to permit the construction, all at his own expense. The CONTRACTOR agrees that there will be no extras charged for this type of work, except by special agreement with the OWNER / PORTLAND WATER DISTRICT and upon written order from him.

B. The CONTRACTOR will make any changes which may be required, such as the removing or restoring of the property of others in the land through which this line will cross in right-of-way or otherwise. The CONTRACTOR will place all pipe, fittings and all attendant facilities to proper line and grade, as called

for in the plans and specifications and to the satisfaction of the OWNER / PORTLAND WATER DISTRICT.

C. The CONTRACTOR will furnish all fuel, gasoline, oil, etc. for the operation of his equipment, all tools and equipment, and all labor and supervision necessary for the handling of material, for excavation, installation, backfilling and cleaning the site as required. He will dispose of excess spoil and restore the land surface over the entire length of the project. Restoration shall be made to the satisfaction of the OWNER / PORTLAND WATER DISTRICT.

D. The CONTRACTOR will perform the pressure and leakage test and disinfection of the main as described herein in the presence of the OWNER / PORTLAND WATER DISTRICT.

E. The CONTRACTOR shall install the water mains to supply the PORTLAND WATER DISTRICT with a satisfactory, watertight pipeline, laid to proper line and grade in accordance with these contract documents to the satisfaction of the PORTLAND WATER DISTRICT.

F. The CONTRACTOR shall coordinate and work concurrently with other contractors, who may be working in the same area, to assure completion in a timely manner.

END OF SECTION

SECTION 01035 - CONTROL OF WORK

PART 1: GENERAL

1.01 PLANT

A. The CONTRACTOR shall furnish plant and equipment which will be efficient, appropriate and large enough to secure a satisfactory quality of work and a rate of progress which will insure the completion of the work within the time stipulated in the Proposal. If at any time such plant appears to the Owner to be inefficient, inappropriate or insufficient for securing the quality of work required or for producing the rate of progress aforesaid, he may order the CONTRACTOR to increase the efficiency, change the character or increase the plant equipment, and the CONTRACTOR shall conform to such order. Failure of the Owner to give such order shall in no way relieve the CONTRACTOR of his obligations to secure the quality of the work and rate of progress required.

1.02 PIPE LOCATIONS

A. Pipelines shall be located substantially as indicated on the Drawings, but the Owner reserves the right to make such modifications in locations as may be found desirable to avoid interference with existing structures or for other reasons. Where fittings are noted on the Drawings, such notation is for the CONTRACTOR'S convenience and does not relieve him from laying and jointing different or additional items where required.

1.03 CARE AND PROTECTION OF PROPERTY

A. The CONTRACTOR shall be responsible for the preservation of all public and private property, and shall use every precaution necessary to prevent damage thereto. If any direct or indirect damage is done to public or private property by or on account of any act, omission, neglect, or misconduct in the execution of the work on the part of the CONTRACTOR, such property shall be restored by the CONTRACTOR, at his expense, to a condition similar or equal to that existing before the damage was done, or he shall make good the damage in other manner acceptable to the Owner.

1.04 PROTECTION AND RELOCATION OF EXISTING STRUCTURES, TREES AND UTILITIES

A. The CONTRACTOR shall assume full responsibility for the protection of all trees, buildings, structures, and utilities, public or private, including poles, signs, services to buildings, buried utilities, gas pipes, water pipes, hydrants, sewers, drains, and electric and telephone cables, whether or not they are shown on the Drawings. The CONTRACTOR shall carefully support and protect all such

structures and utilities from injury of any kind. Any damage resulting from the CONTRACTOR'S operations shall be repaired by him at his expense.

B. Protection and temporary removal and replacement of existing utilities and structures as described in this Section shall be a part of the work under the Contract and all costs in connection therewith shall be included in the Prices in the Proposal.

1.05 CLEANUP

A. During the course of the work, the CONTRACTOR shall keep the site of his operations in as clean and neat a condition as is possible. He shall dispose of all residues resulting from the construction work and, at the conclusion of the work, he shall remove and haul away any surplus excavation, lumber, equipment, temporary structures, and any other refuse remaining from the construction operations, and shall leave the entire site of the work in a neat and orderly condition.

END OF SECTION

SECTION 01151 - MEASUREMENT AND PAYMENT

PART 1: GENERAL

1.1 METHOD OF MEASUREMENT AND BASIS OF PAYMENT:

All measurements for payments will be based on completed work performed in strict accordance with the drawings and specifications, and on the contract bidding and payment item schedules. All work completed under the contract will be measured by the PORTLAND WATER DISTRICT ("DISTRICT") according to the methods outlined below. In cases where the payment clause in the specifications relating to any unit or lump sum price stated in the contract requires that the said unit or lump sum price cover and be considered compensation for certain work or material essential to the item, this same item will not be measured or paid for under any other pay item which may appear elsewhere in the specifications.

PART 2: PAYMENT ITEMS:

2.1 ITEM NO. 625.01 (W-1) Water Line System - Temporary

A. Method of Measurement: Lump Sum

B. Basis of Payment: Payment of the unit price established in the Bid shall be full compensation for laying and jointing, maintenance, removal, testing and associated work as specified and shown on the Drawings.

C. Schedule of Payment: Installation – 85%; Removal – 15%

2.2 ITEM NO. 822.363 (W-2) 12" Class 52 Ductile Iron Water Main – Push On Joint

A. Method of Measurement: Linear feet as measured along the centerline of the pipe for the actual number of linear feet of pipe and fittings installed.

B. Basis of Payment: Payment of the unit price established in the Bid shall be full compensation for excavating, traffic control, pipe, fittings, polyethylene encasement, laying and jointing, removal and disposal of existing piping and appurtenances, removal and disposal of existing piping and appurtenances, capping existing pipes, connections to existing pipes, bedding, backfilling, testing, and associated work as specified and shown on the Drawings.

C. Schedule of Payment: Installation – 85%; Testing – 15%

2.3 ITEM NO. 822.363 (W-3) 12" Class 52 Ductile Iron Water Main – Restrained Joint

A. Method of Measurement: Linear feet as measured along the centerline of the pipe for the actual number of linear feet of pipe and fittings installed.

B. Basis of Payment: Payment of the unit price established in the Bid shall be full compensation for excavating, shoring and bracing, dewatering, traffic control, restrained joint pipe, fittings, polyethylene encasement, laying and jointing, removal and disposal of existing piping and appurtenances, capping existing pipes, connections to existing pipes, bedding, backfilling, testing, and associated work as specified and shown on the Drawings.

C. Schedule of Payment: Installation – 85%; Testing – 15%

2.4 ITEM NO. 822.363 (W-4) 12" Class 52 Ductile Iron Pipe – Restrained Joint, Pre-Insulated in PVC Carrier Pipe

A. Method of Measurement: Linear feet as measured along the centerline of the pipe for the actual number of linear feet of pipe and fittings installed.

B. Basis of Payment: Payment of the unit price established in the Bid shall be full compensation for restrained joint pipe, insulation, carrier pipe, fittings, laying and jointing, installation of expansion joint at each bridge abutment, testing and associated work as specified and shown on the Drawings.

C. Schedule of Payment: Installation – 85%; Testing – 15%

2.5 ITEM NO. 823.31 (W-5) 12” Gate Valve

A. Method of Measurement: Actual number installed

B. Basis of Payment: Payment of the unit price established in the Bid shall be full compensation for excavation, shoring and bracing, dewatering, valve, valve box, traffic control, backfill, testing and associated work as specified and shown on Drawings.

C. Schedule of Payment: Installation – 100%

2.6 ITEM NO. 823.31 (W-6) 12” Gate Valve - Insertion

A. Method of Measurement: Actual number installed

B. Basis of Payment: Payment of the unit price established in the Bid shall be full compensation for excavation, shoring and bracing, dewatering, insertion valve, valve box, traffic control, backfill, testing and associated work as specified and shown on Drawings.

C. Schedule of Payment: Installation – 100%

2.7 ITEM NO. 823.3252 (W-7) 8” Tapping Sleeve and Valve

A. Method of Measurement: Actual number installed

B. Basis of Payment: Payment of the unit price established in the Bid shall be full compensation for excavation, gravel, shoring and bracing, dewatering, tapping sleeve, valve, valve box,labor, equipment, traffic control, backfilling and associated work as specified and shown on Drawings.

C. Schedule of Payment: Installation – 100%

2.8 ITEM NO. 823.34 (W-8) Blow-Off Valve Assembly – 2”

A. Method of Measurement: Actual number installed

B. Basis of Payment: Payment of the unit price established in the Bid shall be full compensation for excavation, shoring and bracing, dewatering, pipe, valve, fittings, valve box, installation, traffic control, backfill, testing and associated work as specified and shown on the Drawings.

C. Schedule of Payment: Installation – 100%

2.9 ITEM NO. 823.341(W-9) Air Release Valve – 1”

A. Method of Measurement: Actual number installed

B. Basis of Payment: Payment of the unit price established in the Bid shall be full compensation for excavation, shoring and bracing, dewatering, corporation, angle valve, fittings, operating rod, service box, valve box, installation, traffic control, backfill, testing and associated work as specified and shown on the Drawings.

C. Schedule of Payment: Installation – 100%

2.10 ITEM NO. 824.30 (W-10) Fire Hydrant

A. Method of Measurement: Actual number installed

B. Basis of Payment: Payment of the unit price established in the Bid shall be full compensation for excavation, shoring and bracing, dewatering, hydrant tee or tapping sleeve, 6-inch hydrant control valve, valve box, 6-inch ductile iron pipe, hydrant, traffic control, thrust blocks, backfill, testing, culvert extensions, and associated work as specified and shown on Drawings.

C. Schedule of Payment: Installation – 100%

2.11 ITEM NO. 825.43 (W-11) 1” Copper Service

A. Method of Measurement: Actual number installed

B. Basis of Payment: Payment of the unit price established in the Bid shall be full compensation for excavation, shoring and bracing, dewatering,

corporation, curb stop, operating rod, service box, copper tubing, installation, traffic control, backfill, testing and associated work as specified and shown on Drawings.

C. Schedule of Payment: Installation – 100%

2.12 ITEM NO. 845.10 (W-12) Structural Steel Utility Support

A. Method of Measurement: Lump Sum

B. Basis of Payment: Payment of the unit price established in the Bid shall be full compensation for securing the encased water main to the bridge, including rollers, straps, fittings, and associated work as specified and shown on the Drawings.

C. Schedule of Payment: Installation – 100%

2.13 ITEM NO 203.26 (W-13) Gravel Borrow – Portland Water District

A. Method of Measurement: Cubic yards as measured in place for the actual number of yards of gravel borrow installed.

B. Basis of Payment: Payment of the unit price established in the Bid shall be full compensation for excavation, removal of unsuitable backfill material, installation and compaction of gravel borrow used for backfilling pipe as specified herein or as directed by the ENGINEER.

C. Schedule of Payment: Installation - 100%

2.14 ITEM NO. 827.302 (W-14) Unsuitable Material Excavated Below Grade

A. Method of Measurement: Cubic yard as measured in place prior to removal for the actual number of cubic yards excavated within the limits shown on the Drawings and directed by the ENGINEER.

B. Basis of Payment: Payment of the unit price established in the Bid shall be full compensation for removing unsuitable material excavated below trench grade and replacing with granular bedding material as directed by the ENGINEER.

C. Schedule of Payment: Installation – 100%

END OF SECTION

SECTION 01310 - SUBMITTALS

PART 1 - GENERAL

1.01 SUBMITTALS FOR OWNER'S APPROVAL

A. For all products to be incorporated into the Work submit to the OWNER for approval sufficient information in the form of shop drawings, product data and/or samples such that the OWNER can determine that the product is in compliance with the Technical Specifications and Drawings.

B. Submit two (2) copies of each submittal. One (1) copy will be returned to the CONTRACTOR. Each copy shall include a cover sheet which clearly identifies the product and corresponding specification section. Each cover sheet shall bear the CONTRACTOR’S stamp and signature certifying that the submittal is in full compliance with the Contract Documents or that any deviations from the Contract Documents are clearly identified on a separate sheet(s) labeled "Deviations From Contract Documents" and attached to the cover sheet.

C. OWNER's Review: The OWNER shall review the submittals and indicate their status as:

1. NO EXCEPTION TAKEN.
2. FURNISH AS CORRECTED.
3. REVISE AND RESUBMIT.
4. REJECTED.

OWNER's review is only for general conformance with the design concept and general conformance with the information given in the Contract Documents. Corrections or comments made during the review do not relieve the CONTRACTOR from compliance with the requirements of the Contract Documents.

D. Re-submittals: Make re-submittals under procedures specified for submittals; identify changes made since previous submittal.

E. CONTRACTOR shall be responsible for the delays and or additional expenses that result from the CONTRACTOR’S failure to submit a complete submittal and/or to identify portions of the submittal that does not conform to the specifications.

END OF SECTION

SECTION 01710 - CLEANUP

PART 1: GENERAL

1.1 SCOPE:

A. The work covered by this section is to provide all cleanup over the entire project.

PART 2: PRODUCTS

2.1 METHOD:

A. The CONTRACTOR may choose any method he wishes for cleanup and shall assume all responsibility for the adequacy of the method and equipment employed.

PART 3: EXECUTION

3.1 CLEANING UP:

A. During the progress of the work, the construction areas shall be kept clean and all rubbish, surplus materials, and unneeded construction equipment shall be removed and all damages repaired so that the public and property owners will be inconvenienced as little as possible.

B. CONTRACTOR shall fill in all depressions and water pockets on public and private property caused by his operations; clean all drains, ditches and culverts which have been obstructed by his work; and, shall leave the site in a neat condition wherever his operations have disturbed existing conditions.

C. CONTRACTOR shall make restitution for any damage to trees, shrubbery or other structures or facilities owned by adjacent property owners.

D. Cleanup shall follow directly behind the progress of the project.

E. All excess material, rubbish or other type of mess shall be cleaned up and the site shall be left to the satisfaction of the right-of-way grantor, or any abutters, as well as to the satisfaction of any municipal or state authority which may be involved if in public right-of-way.

F. Any damage to or displacement of street or highway surfaces due to blasting or otherwise shall be either replaced satisfactorily by the CONTRACTOR or shall be paid for by him to the authority responsible for the street or highway.

END OF SECTION

SECTION 02217 - EXCAVATION AND BACKFILLING FOR WATER MAINS

PART 1: GENERAL

1.1 SCOPE:

A. This section includes all excavation for water mains, hydrants and appurtenances, including drainage, sheeting and bracing, backfilling, disposal of surplus material, and miscellaneous grading. All work shall be done as indicated on the drawings and as herein specified.

B. Excavation for water mains shall be the width and depth as indicated on the standard details. Excavation for hydrants and appurtenances shall provide suitable room for their construction.

C. The CONTRACTOR shall furnish and place all sheeting, bracing and supports, and necessary dewatering, and shall carry out the excavation in such a manner as to eliminate all possibilities of undermining or disturbing existing pipelines, utilities, roadways, shoulders and/or structures.

1.2 RELATED WORK SPECIFIED ELSEWHERE:

Bedding and Backfill Material - Section 02219

PART 2: PRODUCTS

2.1 EQUIPMENT:

Equipment shall be at CONTRACTOR'S option.

PART 3: EXECUTION

3.1 EXCAVATION:

A. When any pavement, regardless of type, must be cut, it shall be done in a neat and symmetrical manner by use of a saw, chisel, or other suitable method. In no case shall pavement be torn up with a backhoe bucket except between and inside of cuts previously made as above. Should any further pavement be broken, outside of the cuts, as by blasting, such damaged pavement shall be cut out in a neat and orderly fashion.

B. The CONTRACTOR shall perform all excavation of every description and of whatever substances encountered to the depths shown on the drawings or directed by the ENGINEER.

C. No extras will be allowed for quicksand excavation, muck excavation, or any other type unless specifically provided for in the bidding schedule.

D. Surplus excavated material may be used at other parts of the construction project as required for fill, etc. Excess material shall be disposed of by the CONTRACTOR.

E. The sidewalls of all trench excavation shall be kept as nearly vertical as possible in all roadways, lawns, near homes, etc. by sheeting, bracing, or other means. The width of the trench at a point six (6) inches above the top of the water pipe shall not be greater than the width detailed. If the type of excavated material will not allow the width detailed, then the trench shall be properly sheeted and braced. The cost of sheeting, bracing, or other means is included in the cost of the pipelines and no extras will be allowed.

F. The excavation shall be made to secure a flat bottom trench (undisturbed earth bottom) for the full length of the pipe so as to give a uniform support to the pipe and shall be in accordance with ANSI A21.50 (AWWA C150), Type 2 Laying Condition.

G. The bottom of the trench shall be accurately graded to provide support to the full length of the pipe barrel. Excavate at each bell to prevent bell from bearing on trench bottom.

3.2 EXCAVATION BELOW TRENCH GRADE:

A. By mistake of CONTRACTOR: Where the bottom of the trench shall, by mistake of the CONTRACTOR, have been taken out to a greater depth than required, it shall be refilled to the proper grade with bedding material, and all to be placed and compacted as specified. The CONTRACTOR shall receive no additional compensation.

B. By instruction from ENGINEER: If, in the opinion of the ENGINEER, existing material below trench grade is unsuitable for properly laying the pipe, the CONTRACTOR will excavate and remove the unsuitable material and replace the same with bedding material as authorized by the ENGINEER and properly compacted to his satisfaction. The CONTRACTOR will be paid under the item titled "Unsuitable Material Excavated Below Trench Grade."

3.3 EXCAVATION NEAR EXISTING UTILITIES, ETC.

A. It will be necessary to excavate near existing pipes, drains and other utilities in certain locations. Some of these have been indicated on the drawings, but no attempt has been made to show all of the services and the completeness and accuracy of the information given is not guaranteed. The CONTRACTOR shall call "Dig-Safe" at least three business days in advance of any excavation to allow utilities to locate underground facilities.

B. As the excavation approaches pipes, conduits, or other underground structures and utilities, digging by machinery shall be discontinued and the excavation shall be done by means of hand tools.

C. If the utility is of the opinion that at any point sufficient or proper support has not been provided, they may order additional supports placed at the expense of the CONTRACTOR. Compliance with such order shall not relieve the CONTRACTOR from his responsibility for the sufficiency of such supports. It shall be the responsibility of the CONTRACTOR to prevent damage to or displacement of utilities and to consult with and request the concurrence of the utility company's representative in this matter at all locations. The cost of protecting such utilities shall be considered incidental to the cost of laying the pipe.

3.4 TRENCH SURCHARGES:

The excavated material shall be placed adjacent to the excavation in a manner to cause no excessive surcharge on the trench bank nor to obstruct free access to hydrants and valves. Should traffic or other conditions make it impractical or unsafe to stack material adjacent to trench, it shall be hauled and stored at a location provided by the CONTRACTOR and at the expense of the CONTRACTOR. When required, it shall be re-handled and used in backfilling the trench by the CONTRACTOR and at his expense.

3.5 SHEETING AND BRACING:

A. The CONTRACTOR shall be responsible for the design, construction, maintenance and safety of all sheeting and bracing required to support the sides of the excavation and to prevent the movement of earth which could in any way damage or endanger adjacent structures, utilities, roadways, increase the width of the excavation to more than that specified, or delay the work.

B. All sheeting, bracing and shoring is to be included in prices bid for several items of work in bidding schedule and will not be paid for as separate items.

C. No shoring shall be left in place unless so directed by the ENGINEER.

3.6 DRAINAGE AND DEWATERING OF EXCAVATIONS:

A. The CONTRACTOR shall conduct his operations so as to prevent at all times the accumulation of water, ice and snow in excavations or in the vicinity of excavated areas so as to prevent water from interfering with the progress or quality of the work. Under no conditions shall water be allowed to rise in unbackfilled trenches after pipe has been placed.

B. Accumulated water, ice and snow shall be promptly removed and disposed of by dewatering. Disposal shall be carried out in a manner which will not create a hazard to public health; nor cause injury to public or private property, work completed or in progress, or public streets; nor cause any interference in the use of streets and roads by the public. Pipes under construction shall not be used for drainage of excavations.

C. During construction, when an unstable condition in the pipe sub-grade has been created due to the CONTRACTOR'S excavation, the sub-grade shall be stabilized by dewatering or other means accepted by the ENGINEER.

3.7 BACKFILLING - GENERAL:

A. In general and unless other material is indicated on the drawings or is specified, material used for backfilling trenches and excavations around structures shall be suitable material which was removed in the course of making the construction excavations or as specified.

B. Frozen materials shall not be placed in the backfill, nor shall material be placed upon frozen material. Previous frozen material shall be removed or shall be otherwise treated as required before new backfill is placed.

C. Backfilling shall be done as soon as practical after the pipe has been laid and jointed.

3.8 SUITABLE BACKFILL MATERIAL:

Suitable backfill material shall be the following or a combination of the following:

(1) Excavated material that will compact to the compaction requirements.
(2) Material that does not contain rocks larger than 8" in any dimension.
(3) Dry clay backfill free from lumps.
(4) Wet clay that alone would pump but when mixed with sand and/or gravel will be stable and will compact.

3.9 BACKFILLING PIPE TRENCHES:

A. As soon as practicable after the pipes have been laid and jointed, backfilling shall begin and shall proceed until it is completed or has sufficient backfill to allow pipe testing.

(1) The first layer of suitable backfill material shall be brought half-way up the pipe and compacted to 80% maximum density and then the normal backfilling shall begin and shall be compacted as specified.

(2) All backfill shall be thoroughly compacted by hand tamping as placed, by use of mechanical or vibratory compactors, or by other acceptable methods.

(3) Remainder of the trench shall be backfilled as follows:

a) In paved areas, road shoulders and seeded areas, the entire depth of trenches above the center line of the pipe shall be backfilled in eight (8) inch layers with suitable backfill material and each layer thoroughly and carefully compacted as specified. Bring backfill up to bottom of gravel base and/or loam.

b) In other areas, the trench above the center- line of the pipe shall have suitable backfill material placed and compacted in eighteen (18) inch maximum layers as specified.

B. The nature of the excavated materials will govern both their acceptability for backfill and the method best suited for their placement and compaction in the backfill.

(1) Both the materials and the methods shall be subject to the acceptance of the ENGINEER.
(2) No stones or rock larger than 8" in the greatest dimension shall be placed in the backfill.

C. Backfilling in public right-of-way, along the streets or highways in or along shoulder, berm or backslope shall be done in accordance with the specifications and requirements of the state or municipality, whichever is responsible for the street or highway involved. Responsibility for the fulfillment of permit conditions or any other applicable requirements of the street or highway authority shall be the obligation of the CONTRACTOR. Surface restoration shall be carried out to the satisfaction of the street or highway authority or as shown on the plans.

D. Backfilling shall follow pipe laying as closely as reasonable, so that a minimum of trench shall be open at any time. The regulations of the highway authorities shall be observed as regards the amount of trench to be open at any one time. Over night, and especially over weekends and holidays, the amount of open trench shall be kept at an absolute minimum. Any caved-in trench, especially after heavy rain and flooding, shall be cleaned out and the bottom consolidated before any additional pipe shall be laid.

3.10 TOP OF BACKFILL:

A. In paved and shoulder areas, backfill shall be carried up to pavement or shoulder sub-grade ready to receive the gravel base. In other areas, backfill shall be brought up to adjacent finished grade minus the depth of any required topsoil and so as to provide a finished surface slightly mounded over the trench. Any trenches improperly backfilled, or where settlement occurs, shall be reopened to the depth required for proper compaction, and shall then be refilled and compacted with the surface restored to required grade and degree of compaction, mounded over, and smoothed off, at no additional expense.

B. In unpaved areas, the gravel topping shall be left in a smooth and even condition, with no large stone on or in the surface. In cases where a paved surface has been broken, a temporary bituminous patch and/or a permanent paving restoration shall be made as required by the appropriate local or state road authority.

3.11 COMPACTION:

A. Compaction densities specified herein shall be the percentage of the maximum density obtainable at optimum moisture content as determined and controlled in accordance with AASHTO Standard T-180, Method A or D depending on the material size. Field density tests shall be made in accordance with AASHTO Standard T-147.

Each layer of backfill shall be moistened or dried as required and shall be compacted to the following densities, unless otherwise specified in the project specifications.

(1)	Bedding material	80%
(2)	Suitable backfill material under paved or shoulder areas	90%
(3)	Gravel base:	
	(a) Under paved areas	95%
	(b) In shoulder areas	90%
	(c) As replacement for unsuitable material excavated below grade	90%
(4)	Loam areas	90%
(5)	All other areas	85%

B. Methods and equipment proposed for compaction shall be subject to prior acceptance by the ENGINEER. Compaction generally shall be done with vibrating equipment. Displacement of, or injury to, the pipe and structure shall be avoided. Movement of in-place pipe or structures shall be at the CONTRACTOR'S risk. Any pipe or structure damaged thereby shall be replaced or repaired as directed by the ENGINEER and at the expense of the CONTRACTOR.

C. Testing:

(1) Field density tests may be ordered by the ENGINEER for each foot of depth of backfill at an average interval of 200 feet along the trench.

(2) The CONTRACTOR shall furnish all necessary samples for laboratory tests and shall provide assistance and cooperation during field tests. The CONTRACTOR shall plan his operations to allow adequate time for laboratory tests and to permit taking of field density tests during compaction.

(3) Any costs of retesting required as a result of failure to meet compaction requirements shall be borne by the CONTRACTOR.

3.12 FILL AND GRADING:

A. Excavated material not required for backfilling around pipes or structures may be used for fill in areas which require material for re-grading.

B. The re-grading shall be carried out as directed by the ENGINEER, so that all surface water will drain towards brooks or drainage pipes.

C. All material shall be of such nature that after it has been placed and properly compacted, it will make a dense and stable fill.

3.13 PROTECTION OF EXISTING STRUCTURES:

. All existing pipes, wires, poles, fences, property line markers and other items, which must be preserved in place without being temporarily or permanently relocated, shall be carefully supported and protected from injury by the CONTRACTOR, at no additional cost to the OWNER. Should such items be injured, they shall be restored by the CONTRACTOR, without compensation therefore, to at least as good condition as that in which they were found immediately before the work was begun.

3.14 ACCOMMODATION OF TRAFFIC:

A. The CONTRACTOR shall construct and maintain, without extra compensation, such adequate and proper bridges over excavations as may be necessary or as directed for the safe accommodation of pedestrians and vehicles. The CONTRACTOR shall furnish and erect, without cost to the OWNER, substantial barricades at crossing of trenches, or along the trench, to protect the traveling public.

B. The CONTRACTOR shall not obstruct fire hydrants.

END OF SECTION

SECTION 02219 - BEDDING AND BACKFILL MATERIAL

PART 1: GENERAL

1.1 SCOPE:

A. The CONTRACTOR shall furnish, place and compact various types of bedding material and trench sand as called for in the specifications or as directed.

B. The types and quality of bedding and backfill material are specified in this section, but its use for pipe bedding, backfill, replacement of unsuitable material excavated below trench grade, and other uses are as specified elsewhere.

1.2 RELATED WORK SPECIFIED ELSEWHERE:

Excavation and Backfilling for Water Mains - Section 02217

PART 2: PRODUCTS

2.1 MATERIALS:

A. Bedding Material:

1. Screened or crushed gravel bedding material shall be hard durable particles free from organic matter, lumps of clay and other deleterious substances. The gradation shall meet the requirements of the following table and MDOT specifications Section 703.06 Type B aggregate

Sieve Size Designation	% By Weight
1/2 inch	35 - 75
1/4 inch	25 - 60
No. 40	0 - 25
No. 200	0 - 5.0

2. Select backfill as specified below may be used for bedding material.

3. Bedding material shall not contain particles of rock which have any dimensions greater than 4”.

B. Select Backfill:

1. Suitable native material with all particles of rock which have any dimensions greater than 4” removed.

2. Sand backfill shall be hard, durable particles of granular material with 100% passing the 1/2" sieve and between 0-15% passing the #200 mesh. All

percentages are by weight. Sand shall be graded so as to secure the required compaction.

C. Backfill:

1. Suitable native material that does not contain stone or rock particles with any dimensions greater than 8”.

2. Bank Run gravel borrow consisting of uniformly graded granular material having no rocks with a maximum dimension greater than 8” and that portion passing a 3-inch square mesh sieve shall contain no more than 70% passing 1/4 inch mesh sieve and not more than 10% passing a No. 200 mesh sieve.

PART 3: EXECUTION

3.1 METHODS:

The materials will be used in accordance with the requirements of the various sections of the specifications, drawings and standard details.

END OF SECTION

SECTION 02536 – TEMPORARY WATER SYSTEMS

In order to maintain uninterrupted water service to District customers, the CONTRACTOR shall provide temporary above ground water systems. The temporary water systems consist of mains, services and fire department outlets. The above ground systems shall be installed only for the duration of deep water main replacement and removed promptly after main replacement is complete. Connections to an existing water source shall be installed and provided by the District. All material for the temporary water systems, except as otherwise indicated, shall be supplied by the contractor. Currently the District has approved 2 manufacturers for the temporary mains and 100-psi poly tube for individual services. Only authorized District personnel shall operate control valves attached to these systems.

Temporary Water Systems Approved Pipe

CertainTeed Certa-Lok Yellowmine	Restrained Joint PVC pressure pipe and fittings
AquaMine (Victaulic Co)	Restrained Joint PVC pressure pipe and fittings

Temporary above ground water mains shall be installed in a manner to both protect the public water supply and to minimize customer service interruption. To allow the District to notify it's affected customers, the CONTRACTOR shall provide the District a minimum of 5 working days notice prior to installing any temporary lines.

The size and approximate location of the temporary systems are shown on the drawings. The CONTRACTOR must obtain the approval of the District for any changes prior to installation of the system.

Temporary mains shall typically be installed behind sidewalks or along the edge, and within the public right of way. The mains shall follow a uniform straight course and shall not bow to accommodate long sections of pipe. Temporary mains shall not be installed on private property. The route of services lines installed from the mains to houses shall be acceptable to the property owner.

The CONTRACTOR shall follow the pipe manufactures installation guidelines when installing temporary systems. Additionally, an approved joint lubrication for the installation of potable water pipe shall be used on all joints prior to connecting pipe.

Source: The District will provide necessary connections at fire hydrants including an approved backflow device and meter. A chlorine tap will also be provided.

Disinfections: All 2” diameter and larger temporary mains shall be chlorinated, sampled, and tested for bacteria prior to activating any portion of the temporary mains. (See disinfection specification for deep mains).

Leakage test: All systems shall be watertight. A static pressure test shall be performed on all systems prior to disinfecting any portion of the system.

Test Procedure

1. Install a pressure gauge at furthest end of the system.
2. Open main feed valve to fully charge the system with water and bleed all air.
3. Record the static pressure reading.
4. Close main feed valve.
5. The system must hold static pressure for a minimum of 30 minutes.

Driveway crossings: A gravel or cold patch raised berm shall be placed over temporary mains to prevent vehicles from dragging along the ridge.

Sidewalk crossings: A gravel or cold patch raised berm shall be placed over temporary mains to eliminate tripping hazards. In areas where the berm would prevent rainwater drainage plywood ramps shall be installed the full width of the sidewalk and over the temporary mains

Roadway crossings: Temporary mains shall be buried just below the surface of the roadway. The pipe shall be protected with clean sand or material free from rocks, as the rocks tend to punch through the pipe when exposed to heavy traffic. The use of cold patch or QPR as fill material is acceptable.

Curbing or esplanade rise: To accommodate curb rise, pre-fabricated certa-lock bends and/or elbows shall be used. Sweeping or bending the actual pipe is not an acceptable method unless the sweep lies flat on the ground and is not obstructing walkways. A traffic barrel shall be placed near the curb at offset connections to protect the offsets from being damaged by vehicles.

Cutting pipe: Follow manufacturer’s installation instructions. All joints, including those on cut lengths of pipe, shall be grooved to provide a restrained joint. Pre-fabricated bends, elbows, and tees shall be used when changing direction.

Blow off: A 1” blow off shall be installed at the ends of all temporary mains. The blow off shall be constructed using a 1” brass female curb stop.

Isolation valves: Shall be 2” brass female curb stops for 2” mains and 4” resilient wedge valves for 4” mains (grip rings shall be used for 4” valves). Valves shall be located as shown on the plan. The valves are attached to the mains using pre-fabricated adapters.

Service line connections: All temporary individual service lines shall be ¾” poly tube rated at a minimum working pressure of 100 psi. The service lines shall be connected to a 2”x 3/4” factory tapped restrained joint coupling, then a ¾” close brass nipple, a ¾” female curb stop and a brass poly tube adapter ¾” insert x

male. The tube shall be extended to a sill cock (outside faucet) and connected using the same poly tube adapter. Prior to connecting the service, a garden hose connection, including a brass boiler drain or sill cock valve shall be installed in the line. All service lines shall be flushed prior to activating mains.

Anti-siphon sill cocks: Only District authorized personnel shall disassemble anti-siphon sill cocks.
Excavating and connecting into existing deep service lines may be required where properties have malfunctioning sill cocks or no exterior plumbing.

Shutting off meters: After activating the temporary lines, all meters shall be shut off. Only District authorized personnel may de-activate meters.

Maintenance of temporary water systems: The contractor shall be responsible for maintaining the temporary systems during the regular workday including making repairs to the systems. The District's Inspector must be on site prior to any work, or repairs being performed on the temporary water systems. District crews will respond to all after hours emergencies. All affected customers shall be notified as soon as possible prior to any service interruption.

It is expected that contractors will keep an inventory of readily available repair parts on hand enabling them to quickly respond to any type of problem. Restrained joints shall be maintained. The use of non-restrained joint couplings is prohibited. Joint leaks shall be cut out. The use of stainless steel wrap around repair clamps over pinholes is acceptable.

END OF SECTION

SECTION 02537 - DUCTILE IRON WATER PIPE & FITTINGS

PART 1: GENERAL

1.1 SCOPE:

A. This section includes the furnishing and installing of ductile iron water pipe and ductile iron or cast iron fittings as specified.

1.2 RELATED WORK SPECIFIED ELSEWHERE:

A. Excavation and Backfill for Water Mains - Section 02217

B. Bedding and Backfill Material - Section 02219

1.3 SUBMITTALS:

A. Submit shop drawings for all material in accordance with the provisions of Section 01310.

PART 2: PRODUCTS

2.1 MATERIALS:

A. See Section 02999 – Water Main Material Specifications

PART 3: EXECUTION

3.1 PIPE LAYING CONDITIONS:

A. The interior of each pipe shall be inspected while being joined to see that the alignment is preserved and to assure that no dirt or debris has entered the pipe after laying and partial backfilling.

B. Pipe fittings and accessories shall be carefully lowered into the trench, piece by piece, by means of derrick, crane, slings and other suitable tools and equipment, in a manner such as to prevent damage to the material or to its protective coating and linings. No chain or slings shall be passed through the inside bore of any pipe or valve or fitting. Under no circumstances shall piping materials be dropped or dumped into the trench.

3.2 LAYING DUCTILE IRON PIPE:

A. As soon as the excavation is completed and the existing trench bottom has been brought to the proper grade, the pipe shall be laid.

B. All pipe, before being lowered into the trench, shall be inspected inside and out. Both ends shall be cleaned and any visible dirt or debris removed from inside the pipe. Care shall be taken to lay the pipe to true lines and grades as shown on the drawings.

C. Coupling holes shall be excavated so that the barrel of the pipe shall bear upon the trench bottom.

D. Blocking under the pipe will not be permitted.

E. Each section shall rest upon the pipe bed for the full length of its barrel.

F. The circular rubber gasket shall be inserted in the gasket seat provided. A thin film of gasket lubricant shall be applied to the inside surface of the gasket. Gasket lubricant shall be a solution of vegetable soap or other solution supplied by the pipe manufacturer.

G. The spigot end of the pipe shall be cleaned and entered into the rubber gasket in the bell, using care to keep the joint from contacting the ground. The joint shall then be completed by forcing the plain end to the seat of the bell. Pipe which is not furnished with a depth mark shall be marked before assembly to assure that the spigot end is inserted to the full depth of the joint.

H. Pipe shall be aligned with the preceding unit and laid so as to form a close joint with the adjoining pipe and bring the inverts continuously to the required line and grade.

I. No length of pipe shall be laid until the previous length has had sufficient material tamped about it to firmly secure it in place so as to prevent any movement or disturbance.

J. Under no circumstances shall pipe be laid in water, and no pipe shall be laid when trench conditions or weather are unsuitable for such work, except by permission of the ENGINEER.

K. The pipe shall be laid with the bell ends facing the direction of the laying, unless otherwise permitted by the ENGINEER.

L. Joints, when made, shall be done in the manner prescribed by the manufacturer of the pipe. In the case of rubber gasket joints, these joints shall be made up in accordance with the American National Standards for the jointing of cast iron pressure pipe and fittings. (ANSI/AWWA C111/A21.11).

M. Thrust blocks shall be used behind tees, bends, or other fittings where shown. Size shall be appropriate for soil conditions and thrust forces acting on the specific fitting.

3.3 TRENCH BOTTOM:

A. Should the trench bottom contain unsuitable material, as indicated in Section 02217, Article 3.2-b, the CONTRACTOR shall over-excavate and replace with bedding material as required and authorized by the ENGINEER. The quantity of unsuitable material will be measured from the bottom outside of the pipe.

B. Should ledge be encountered, it shall be removed to a depth of 6" below the bottom of the pipe, and replaced with bedding material.

3.4 CUTTING PIPE:

A. All ductile iron pipe shall be cut using abrasive wheel cutter, rotary wheel hand cutter (with carbide cutter) or a guillotine pipe saw. All cuts shall be square and even with no ragged rough ends.

B. Field cut pipe lengths shall be beveled and filed to avoid damage to the gasket and facilitate making the joint.

C. When the cut end of pipe is to be used as a joint, the outside of the cut end shall be tapered back about 1/8-inch at an angle of about 30 degrees with the center line of the pipe. This shall be done with a coarse file or a portable grinder.

3.5 TEMPORARY PLUGS:

When pipelaying is not actually in progress, the openings of pipes shall be closed by temporary watertight plugs or other accepted means.

3.6 RETAINER GLANDS:

Install retainer glands on all mechanical joints of fittings, valves and hydrants.

3.7 POLYETHYLENE ENCASEMENT:

A. Tube type polyethylene encasement shall be installed on all ductile iron pipe and fittings in accordance with AWWA Standard C105 - latest revision, Method A. Circumferential wraps of tape or plastic tie straps shall be placed at 2-ft. intervals along the barrel of the pipe.

B. The polyethylene encasement shall prevent contact between the pipe and the surrounding backfill and bedding material but is not intended to be a completely airtight or watertight enclosure. All lumps of clay, mud, cinders, and so forth, on the pipe surface shall be removed prior to installation of the polyethylene encasement. During installation, care shall be exercised to prevent soil or

embankment material from becoming trapped between the pipe and the polyethylene.

C. The polyethylene film shall be fitted to the contour of the pipe to effect a snug, but not tight, encasement with minimum space between the polyethylene and the pipe. Sufficient slack shall be provided in contouring to prevent stretching the polyethylene where it bridges irregular surfaces, such as bell-spigot interfaces, bolted joints, or fittings, and to prevent damage to the polyethylene due to backfilling operations. Overlaps and ends shall be secured with adhesive tape, string, plastic tie straps, or any other material capable of holding the polyethylene encasement in place until backfilling operations are complete.

END OF SECTION

SECTION 02540 - BRIDGE SUSPENDED D.I. WATER PIPE AND APPURTENANCES

PART 1: GENERAL

1.1 SCOPE:

A. This section includes the furnishing and installing of bridge suspended insulated ductile iron water pipe as specified.

1.2 RELATED WORK SPECIFIED ELSEWHERE:

A. Ductile Iron Water Pipe and Fittings - Section 02537

1.3 SUBMITTALS:

A. Submit shop drawings for all material in accordance with the provisions of Section 01310.

PART 2: PRODUCTS

2.1 MATERIALS:

A. Pre-Insulated Restrained Push-On Joint Ductile Iron Pipe:

1. Manufacturers: Firms regularly engaged in manufacture of pipe and fittings of types and sizes required, whose products have been in satisfactory use in similar service for not less than 3 years. Acceptable Manufacturers: Thermal Pipe Systems, Inc. or ENGINEER'S approved equal.

2. Pre-insulated pipe shall consist of a push-on restrained joint ductile iron carrier pipe and polyurethane foam insulation surrounded by PVC casing pipe. Gaps in the casing pipe, if any, shall be insulated and covered with split PVC sleeves retained by stainless steel bands or clamps.

3. Ductile Iron Carrier Pipe shall be push-on restrained joint type conforming to AWWA C151 (As Specifed in Sec 02537) TR-FLEX by U.S.P. Pipe or equal. Pipe shall be class 52 in sizes 4" through 12" and class 51 in sizes 16" - 30". Bell and spigot connections shall be in accordance with ANSI/AWWA C111.

4. The polyvinyl chloride (PVC) casing pipe shall be of virgin PVC resin meeting the minimum classification requirements of ASTM D1784, Class 12454-B. For the 8" carrier pipe the minimum casing thickness shall be 0.24 inches. This jacket in combination with the foam system shall be suitable for H-20 highway loading.

5. End seals for pre-insulated ductile iron pipe shall be compression rubber.

6. Polyurethane Foam Insulation:

   (a) Polyurethane foam insulation shall completely fill the annular space and meet the following specifications:

Type:	Two component urethane
Compressive Strength:	35 p.s.i. parallel min at 5%
Shrinkage:	None at 70ºF
Free Rise Density:	2.0 to 3.0 lbs/cubic
Aged "K" (70ºF - 72 hrs)	0.140 BTU-in/hr-ft²-ºF
Closed Cell Content:	90%
Minimum Thickness of foam around 8" carrier pipe:	1.36 inches

   (b) Insulation concentricity: Carrier pipe shall be concentric to casing pipe. The allowable maximum deviation from centerline of carrier pipe shall be plus or minus ¼ inch at the casing center point and plus or minus 1/16 inch at the end seals.

7. Installation of the piping system shall be done in accordance with the following specifications and instructions.

8. To the extent possible, pipe shall be accurately prefabricated at the factory to dimensions established at the construction site and worked into place without excessive springing or forcing, properly clearing all openings and equipment. Pipe ends shall have burrs removed by reaming and shall be installed to permit free expansion and contraction without damage to joints. Good workmanlike procedures shall be followed. Field cuts, if necessary, must be pre-approved by the District and performed in accordance with the manufacturer's recommendations using the proper tools.

9. Pipe and fittings shall be assembled in strict accordance with the manufacturer's printed directions by personnel who have been instructed in installation procedures by the manufacturer's representative.

B. Wall Penetration Sleeves:

Provide wall penetration sleeves where piping passes through masonry or concrete walls. Sleeves shall be schedule 40 epoxy coated steel pipe. Sleeves shall be held securely in proper position and location during construction. Sleeves shall be of sufficient length to pass through entire thickness of walls and of the diameter shown on the drawings.

C. Wall Penetration Seals:

1. All wall penetrations shall be sealed to prevent water from migrating through the wall penetration. Penetrations shall be sealed on both sides of the abutment.

(a) Mechanical Sleeve Seals: Modular mechanical type, consisting of interlocking synthetic rubber links shaped to continuously fill annular space between pipe and sleeve, connected with bolts and pressure plates which cause rubber sealing elements to expand when tightened, providing watertight seal and electrical insulation.

(b) Manufacturer: Provide mechanical sleeve seals of Thunderline Corp., “Link Seal” or equal.

D. Pipe Rollers and Appurtenances:

1. Pipe Rollers shall be Anvil International Figure 274 or equal, size as indicated on the plans.

2. Furnish with hot-dipped galvanized finish and stainless steel roll rod (axle).

3. Support the rolls with Figure 146 hot-dipped galvanized continuous threaded rod of diameter appropriate to the size of the roller supported.

4. Furnish standard galvanized protection shield Anvil Fig. 167 or equal centered at each roller location.

5. All incidental hardware: nuts, bolts and washers shall be American Standard pattern, hot dipped galvanized and matched with rollers and appurtenances.

E. Inserts:

1. Concrete inserts shall be Anvil International Fig. 281 or equal.

2. Furnish with hot-dipped galvanized finish on both body and nut.

3. Insert must support up to 1200 lb loading.

PART 3: EXECUTION

A. PIPE SLEEVE:

Correct location and installation of pipe sleeves in the abutments is critical to a successful pipeline installation. Verify precise locations of all sleeves in the forms, prior to casting them in concrete. Assure that they are secure in the forms so as to remain in their intended locations during the casting process.

B. PIPE INSTALLATION:

1. Install pre-insulated potable water main in the locations shown on the drawings, using the required materials, hardware and manufacturer's recommended techniques.

2. Adjust elevation of pipes using the vertical adjustment available in the suspension of the pipe rollers to assure a uniform grade that closely matches that of the bridge, and is free of sags and humps. Assure that pipe rollers are level, side to side and adjust as needed. Flame cutting of galvanized parts will not be permitted because of the collateral damage to the galvanizing.

3. At the completion of the work, repair any damage to galvanized coatings of suspension beams, rods and rollers using an approved high-zinc repair paint.

C. RUBBER SEALS:

After all adjustments of alignment are complete, install linked rubber seals in the annular spaces where the pipelines pass through both the near and far faces of all abutments.

END OF SECTION

SECTION 02594 - PRESSURE AND LEAKAGE TESTS OF DI/PVC WATER MAINS

PART 1: GENERAL

1.1 SCOPE:

Furnish all labor, materials, equipment, gages and related items necessary to complete all pressure and leakage tests of all ductile iron (DI) water mains.

PART 2: PRODUCTS

2.1 MATERIALS:

Materials shall be at CONTRACTOR'S option.

PART 3: EXECUTION

3.1 PRESSURE AND LEAKAGE TESTS:

A After the pipe has been laid and backfilled, it shall be pressure tested and tested for leakage in the presence of the ENGINEER and/or the OWNER.

B. All tests shall be conducted at a time and in a manner to minimize as much as possible any interference with the operation of the existing water system. The OWNER will supply all water necessary for testing and placing the lines in service. The CONTRACTOR shall supply all labor, materials and equipment necessary to make any necessary connections to the water system and to carry out the tests.

C. The CONTRACTOR shall excavate and provide a corporation tap for pressure and leak testing as directed by the ENGINEER. The CONTRACTOR is responsible for all work associated with the excavation, including proper trench protection, barricades, traffic control and proper backfilling and compaction upon successful completion of the test.

D. The pipe shall be slowly filled with water and all air expelled from the pipe. If permanent air vents are not located at all high points, CONTRACTOR shall install corporation stops at such high points to bleed off air as the line is filled with water.

E. A pressure test pump will be connected to the new main at the testing point. The pressure will be slowly increased to 150 psi and allowed to stabilize (+/-2.5 psi) for a minimum of 15 minutes.

F. A reservoir of potable water shall be connected to the test pump and the initial level of water recorded.

G. The pump pressure shall be maintained at 150 psi for one hour with all make up water withdrawn from the reservoir.

H. After one hour, the water level in the reservoir will be measured and the volume of water drawn from the reservoir calculated and compared with the following allowable leakage:

$$\text{Allowable Leakage (gph)} = \frac{\text{Pipe Length (feet)} \times \text{Nominal Diameter (inches)}}{10{,}876^{*}}$$

*Correct only for 150 psi test pressure

I. If any test discloses leakage greater than that specified above, the CONTRACTOR shall, at his own expense, locate and make repairs as necessary until the leakage is within the specified allowance.

J. Final acceptance of the lines will not occur until satisfactory tests have been passed.

END OF SECTION

SECTION 02595 - DISINFECTION OF WATER MAINS

PART 1: GENERAL

1.1 SCOPE

A. Furnish all labor, materials, equipment, and incidentals necessary to disinfect the distribution system.

B. Do not disinfect water mains until all testing required by Section 02594 has been satisfactorily completed.

PART 2: PRODUCTS

MATERIALS:

A. The CONTRACTOR shall chlorinate the new main in accordance with the continuous feed method specified in Section 5.2 of AWWA Standard C651-latest revision, using 5% to 15% sodium hypochlorite solution.

B. The CONTRACTOR may use calcium hypochlorite granules or tablets placed in the new mains during installation in accordance with Section 5.1 of AWWA Standard C651-latest revision, as a supplement to the continuous feed method.

PART 3: EXECUTION

3.1 DISINFECTION:

Upon satisfactory completion of the pressure and leak test, all new water mains shall be disinfected before they are placed into service in accordance with Section 5.2 of AWWA Standard C651-latest revision and the procedures specified herein.

3.2 FLUSHING:

A. Section of pipe to be disinfected shall first be flushed to remove any solids or contaminated material that may have become lodged in the pipe. If no hydrant is installed at the end of the main, then a suitably sized tap should be provided.

B. All taps required by the CONTRACTOR for chlorination or flushing purposes, or for temporary release of air, shall be provided by him as part of the construction of the water main.

C. Flushing shall proceed for 4 hours at a flow velocity of 2.5 feet per second.

3.3 REQUIREMENTS OF CHLORINE:

Before being placed into service, the main shall be chlorinated so that a chlorine residual of not less than 10 parts per million remains in the water after standing 24 hours in the pipe. Chlorine residual at start of test shall be at least 50 parts per million.

3.4 POINT OF APPLICATION:

The preferred point of application of the chlorinating agent is at the beginning of the pipeline or any valved section of it and through a corporation stop inserted in the pipe. The water injector for delivering the chlorine solution water into the pipe should be supplied from a tap made on the pressure side of the gate valve controlling the flow into the pipeline extension. Alternate points of application may be used when accepted or directed by the ENGINEER.

3.5 RATE OF APPLICATION:

Water from the distribution system or other source of supply as accepted by the ENGINEER, shall be controlled to flow very slowly into the newly laid pipeline during application of the chlorine. The rate of chlorine mixture flow shall be in such proportion to the rate of water entering the newly laid pipe that the dosage applied to the water will be sufficient at achieve at least 50 parts per million unless otherwise directed by the ENGINEER.

3.6 PREVENTING REVERSE FLOW:

Valves shall be operated by the OWNER so that the strong chlorine solution in the line being treated will not flow back into the line supplying the water. Check valves may be used, if desired.

3.7 RETENTION PERIOD:

Treated water shall be retained in the pipe at least 24 hours. After this period, the chlorine residual at pipe extremities and at other representative points shall be at least 10 parts per million.

3.8 CHLORINATING VALVES AND HYDRANTS:

In the process of chlorinating newly laid pipe, all valves or other appurtenances shall be operated while the pipeline is filled with the chlorinating agent and under normal operating pressure.

3.9 FINAL FLUSHING AND TESTING:

A. Following chlorination, all treated water shall be thoroughly flushed from the newly laid pipe at its extremity until the replacement water throughout its

length shows, upon tests, that the residual chlorine is not in excess of that to be carried in the system.

B. After flushing, water samples collected from the treated piping system as directed by the ENGINEER shall show satisfactory bacteriological results. Bacteriological analyses shall be performed by the OWNER.

C. Chlorine residual of water being flushed from the newly laid pipe following chlorination must be neutralized by treating with one of the chemicals listed in the table below.

AMOUNTS OF CHEMICALS REQUIRED TO NEUTRALIZE VARIOUS RESIDUAL CHLORINE CONCENTRATIONS IN 100,000 GALLONS OF WATER*

Residual Chlorine Concentration (mg/l)	Sulphur Dioxide	Sodium Bisulfate	Sodium Sulfite	Sodium Thiosulfate
1	0.8	1.2	1.4	1.2
2	1.7	2.5	2.9	2.4
10	8.3	12.5	14.6	12.0
50	41.7	62.6	73.0	60.0

*Except for residual chlorine concentration, all amounts are in pounds.

3.10 REPETITION OF FLUSHING AND RESULTS:

Should the initial disinfection process result in an unsatisfactory bacterial test, the original chlorination procedure shall be repeated by the CONTRACTOR until satisfactory results are obtained.

END OF SECTION

SECTION 02999 – WATER MAIN MATERIALS SPECIFICATIONS

BOLTS AND NUTS

GENERAL SPECIFICATIONS

General Description of Properties Required:

1.0 Stainless Steel: Type 304 – contains the addition of Molybdenum to the nickel-chromium steels.

2.0 High Strength/Low Alloy Steel: Trade name for cold formed T-head bolts containing alloying elements such as copper, nickel, and chrome (Cor-Ten).

CAST IRON OR DUCTILE IRON SPLIT REPAIR SLEEVE

GENERAL SPECIFICATIONS

1.0 Split repair sleeve shall be mechanical joint.

2.0 The side rubber gaskets shall be rectangular to cross-section and shall fit into grooved channels in the casting. These gaskets shall extend the entire length of the sleeve.

3.0 Split repair sleeve shall be AB-CD pattern to permit use of plain rubber and duck-tipped gaskets for various O.D. piping sizes.

4.0 Mechanical joint with accessories furnished; glands, gaskets and Cor-Ten T-bolts and nuts or equal.

5.0 All side bolts shall be Stainless Steel (Type 304) or silicone bronze.

6.0 Interior and exterior to be bituminous coated with a minimum of 4 mils D.F.T.

7.0 The sleeve shall be provided with a 2” F.I.P.T. test port with brass plug.

APPROVED MANUFACTURERS

A. All Manufacturers

CORPORATION STOPS

GENERAL SPECIFICATIONS

1.0 Conforming to AWWA C-800.

2.0 ¾” to 2” curb stops shall be ball valve design with brass ball that is teflon coated or brass ball with teflon seats.

3.0 The ball shall be supported by seats which are water tight in either direction.

4.0 The valve shall have a full port opening.

5.0 The body of the corporation stop shall be of heavy duty design.

6.0 The valve working pressure shall be 300 p.s.i.

APPROVED MANUFACTURERS

A. A.Y. McDonald
B. Cambridge Brass
C. Ford Meter Box Co.
D. Mueller Co.

CURB STOPS

GENERAL SPECIFICATIONS

1.0 Conforming to AWWA C-800

2.0 ¾” to 2” curb stops shall be ball valve design with brass ball that is teflon coated or brass ball with teflon seats.

3.0 The ball shall be supported by seats which are water tight in either direction.

4.0 The valve shall have a full-port opening.

5.0 The valve shall open with ¼ turn (90°) with a check or stop.

6.0 The valve shall not have a drain.

7.0 The valve stem shall have 2 “O” rings and a bronze ring lock which holds the stem solidly in the valve body.

8.0 The valve body shall be of heavy duty design.

9.0 The valve working pressure shall be 300 p.s.i.

APPROVED MANUFACTURERS

A. A.Y. McDonald
B. Cambridge Brass
C. Ford Meter Box Co.
D. Mueller Co.

CUT-IN SLEEVE

GENERAL SPECIFICATIONS

1.0 The sleeve shall be mechanical joint to plain-end type.

2.0 The sleeve shall fit over either AB or CD pattern pipe.

3.0 Coatings:
   a) Interior – Seal-coated – AWWA C104-74, min. 4 mils D.F.T.
   b) Exterior – Bituminous coated min. 4 mils D.F.T.

4.0 Mechanical joint accessories shall be furnished:
   a) Glands: Duck-tipped for AB pipe, Plain Gaskets for CD pipe
   b) Cor-Ten tee bolts and nuts

5.0 Cut-in sleeves shall have at least one stop-screw in sizes up through 10” and at least 2 stop-screws in 12” size.

6.0 The stop-screw “O” ring shall be recessed into the body of the sleeve between stop-screw and body.

APPROVED MANUFACTURERS

A. Mueller Co.

DUCTILE IRON FITTINGS

INCLUDING BENDS, REDUCERS, OFF-SETS, TEES AND SLEEVES

GENERAL SPECIFICATIONS

7.0 Material shall be ASTM A536 latest, grade 70-50-05, in accordance with AWWA C110 (latest revision) for fittings larger than 24" and C153 (latest revision) for fittings 3" thru 24".

8.0 Fittings shall be cement lined AWWA C104 (latest revision) or fusion bonded epoxy coated with a 5 mil nominal thickness per AWWA C550 and C116.

9.0 Interior seal coated AWWA C104 with minimum of 4 mils dry film thickness.

10.0 Exterior bituminous coated, 4 mils minimum dry film thickness or fusion bonded epoxy coated with a 5 mil nominal thickness per AWWA C550 and C116.

11.0 Sleeves shall not be cement lined, but shall be bituminous coated inside to 4 mils dry film thickness. All sleeves shall be long body type.

12.0 Mechanical joint with accessories furnished: D.I. glands, gaskets, Cor-Ten T-bolts and nuts.

13.0 Pressure Ratings:
a) Class 350 pressure rating in accordance with AWWA C153 - 3"-24" sizes.
b) Class 250 pressure rating in accordance with AWWA C110 - 30"-48" sizes.

14.0 The "compact design" fittings must provide adequate space for the MJ joint and accessories to be installed without special tools (i.e. Lowell wrench can be used).

APPROVED MANUFACTURERS

A. All Manufacturers

DUCTILE IRON PIPE

GENERAL SPECIFICATIONS

1.0 Ductile iron pipe shall meet requirements of AWWA Standard C-151 (latest revision) and be cement lined and seal coated to meet AWWA Standard C-104 (latest revision).

2.0 Joints shall meet requirements of AWWA C-111 (latest revision).

3.0 Interior seal coated, bituminous paint oil cut, emulsion not acceptable, thickness minimum of 2 mils dry film thickness.

4.0 Exterior bituminous coated with minimum of 2 mils dry film thickness.

5.0 Class 52 wall thickness, 4-inch diameter through 12-inch diameter inclusive.

6.0 Ductile Iron Pipe with diameters 16-inches and larger shall be approved by PWD.

7.0 State nominal laying length and mark shorter lengths near bell.

8.0 Mechanical joint pipe to be furnished with gland, gaskets and Cor-Ten bolts and nuts.

APPROVED MANUFACTURERS

A. American Cast Iron Pipe
B. Griffin Pipe
C. U.S. Pipe
D. Clow Pipe
E. McWain Pipe
F. Atlantic States Pipe

FIRE HYDRANT

GENERAL SPECIFICATIONS

1.0 The hydrant shall open right.

2.0 The operating nut shall:
- a) be D.I. or bronze
- b) be pentagon in shape with dimensions: Top 1-13/16" tapering to 1-7/8" on bottom.

3.0 Nozzles shall be:
- a) 2 each – 2-1/2” National Standard Thread
- b) 1 each – 4-1/2” National Standard Thread.

4.0 Port covers shall be supplied without chains and shall have the same size pentagon operator as specified in 3.0(b) above.

5.0 Traffic model hydrant with breakaway feature

6.0 Barrel length(s) shall be:
- a) 6 ft. cover, 6-1/2 ft. bury; or
- b) 5-1/2 ft. cover, 6 ft. bury, or
- c) 5 ft. cover, 5’-6” bury

7.0 Hydrant shoe or base shall have the following:
- a) 6" MJ inlet;
- b) 5-1/4" valve opening with non-draining bronze seat that is permanently plugged;
- c) valve seat and sub-seat arrangement shall be bronze to bronze;
- d) Horizontal and vertical blocking planes manufactured into hydrant base

8.0 Bolts:
- a) all buried mechanical joint bolts and nuts (T-head, etc.) shall be Cor-Ten or equal;
- b) all buried flange joint bolts shall be stainless steel (Type 304) or silicone bronze.

9.0 Protective Coatings shall consist of the following:
- a) all paintings and coatings shall be a minimum of 3 mils total dry film thickness, unless noted
- b) the internal area of the hydrant base, which is normally exposed to water and which includes the internal body of hydrant shoes, including lower valve plate, shall be epoxy coated

c) all internal and external cast iron or ductile iron components shall be coated with an approved bituminous coating, 3 mils minimum
d) Coatings for upper barrel - exterior:
   1. Surface preparation blast clean SSPC-SP-6
   2. Primer Sherwin Williams Red Oxide E61RC21, 1.5 mils, dry
   3. Finish coat Sherwin Williams – Regal Yellow, F78Y30, 1.5 mils, dry or sufficient paint to hide the second coat
   4. Total dry film thickness - 3 mils minimum.
e) Coatings for bonnet, operating nut, port cap:
   1. Surface preparation: Blast clean, SSPC-SP-6
   2. Exterior primer
   3. Exterior aluminum
   4. Total dry film thickness: 3 mils minimum.

10.0 Flow Indicator Collars: PWD personnel shall install flow indicator collars on all new hydrants.

FIELD TEST OF INSTALLED HYDRANT

1.0 Hydrant flow shall completely stop with no more than 200 ft. lb. of torque applied to the operating nut.

2.0 Failure to shut completely at no more than 200 ft. lb. of torque will be cause for rejection of that hydrant.

APPROVED HYDRANTS

A. Clow Eddy – with lower stern machined from bar stock
B. American Darling Models: B62B-1, B62B-5

PIPE JOINT RESTRAINER

GENERAL SPECIFICATIONS

1.0 Pipe Restraints:

1.1 Use in conjunction with mechanical joint fittings.

1.2 The joint restraint ring and its wedging components shall be made of ductile iron conforming to ASTM A536-80.

1.3 Dimensions of the restrainer must allow use with standard M.J. bell conforming to AWWA C111 and AWWA C153.

1.4 Restrainer must restrain up to 350 psi of working pressure in 3” to 16“ sizes and 250 psi of working pressure in 18” to 48” sizes with a 2:1 safety factor.

1.5 Torque limiting twist off nuts shall be used to ensure proper actuation of the restraining wedges (used on a,b,c below).

APPROVED MANUFACTURERS

A. Sigma Super Lug
B. Ford Uni-Flange Series 1400
C. Ebba Mega Lug
D. Romac Grip Ring
E. Star Grip Series 300
F. Romac Romagrip
G. MJ FIELD LOK Gasket

POLYETHYLENE ENCASEMENT

GENERAL SPECIFICATIONS

1.0 Tube type polyethylene encasement shall be installed on all ductile iron pipe and fittings in accordance with AWWA Standard C105 - latest revision, Method A.

2.0 Polyethylene encasement shall be either linear low-density polyethylene (LLDPE) film with a minimum thickness of 8-mil or high-density, cross-laminated polyethylene (HDCLPE) film with a minimum thickness of 4-mil.

3.0 Circumferential wraps of tape or plastic tie straps shall be placed at 2-ft. intervals along the barrel of the pipe.

4.0 The polyethylene encasement shall prevent contact between the pipe and the surrounding backfill and bedding material but is not intended to be a completely airtight or watertight enclosure. All lumps of clay, mud, cinders, and so forth, on the pipe surface shall be removed prior to installation of the polyethylene encasement. During installation, care shall be exercised to prevent soil or embankment material from becoming trapped between the pipe and the polyethylene.

5.0 The polyethylene film shall be fitted to the contour of the pipe to effect a snug, but not tight, encasement with minimum space between the polyethylene and the pipe. Sufficient slack shall be provided in contouring to prevent stretching the polyethylene where it bridges irregular surfaces, such as bell-spigot interfaces, bolted joints, or fittings, and to prevent damage to the polyethylene due to backfilling operations. Overlaps and ends shall be secured with adhesive tape, string, plastic tie straps, or any other material capable of holding the polyethylene encasement in place until backfilling operations are complete.

6.0 Three layers of polyethylene adhesive tape shall be wrapped around any polywrapped pipe where a tapping machine will be placed. All copper services connected to a pipe wrapped in polyethylene encasement shall be wrapped within three feet of the pipe.

RESILIENT SEAT GATE VALVE

GENERAL SPECIFICATIONS

1.0 Valve shall meet the latest revision of the AWWA C-509 Standard.

2.0 Valve shall have a smooth unobstructed water way which shall be a minimum diameter of the valve.

3.0 Valve ends to be specified and shall be furnished with Cor-ten (or equal) bolts and nuts.

4.0 Valve shall be rated for zero leak rate at 200 psi differential working pressure and have a 400 psi hydrostatic test for structural integrity.

5.0 Sealing - Valve shall have a minimum of 2 “O” rings situated such that the “O” rings above the thrust collar can be replaced with the valve under pressure and in the open position.

6.0 Stem - Valve stem shall:
- a) open right with a stem nut made of grade D, E manganese bronze;
- b) be non-rising;
- c) be designed with a thrust collar integrally cast to the stem;
- d) be designed with two (2) thrust washers, placed one above and one below the stem thrust collar;
- e) be constructed of grade D,E manganese bronze;
- f) be such that the thrust washers are made of a synthetic polymer with physical properties required.

7.0 Valve Body - The body, including the stuffing box and the bonnet, shall be constructed of cast iron or ductile iron, meeting the latest revision of AWWA C-153.

8.0 Valve Wedge:
- a) shall be constructed of ductile iron (less guiding mechanism);
- b) shall be fully encapsulated and permanently bonded with a resilient elastomer;
- c) shall be constructed such to allow the flushing of any interior exposed surface during operations.

9.0 Coatings:
- a) the internal and external valve body, including the stuffing box, bonnet, and interior of the wedge shall be fusion bonded epoxy coated with 8 mils D.F.T.

b) interior shall meet latest version of AWWA C-550.
c) shall be holiday free, interior and exterior, per testing method described in AWWA C-550, Sec. 5.1.

10.0 Operating Nut:
a) shall be two (2) inch square ductile iron:
1. with a countersunk hold down nut (made of 316 stainless steel or silicone bronze). This applies to stems that are tapered; or
2. with a stainless steel pin inserted thru the stem. This applies to stems of full diameter.

11.0 Bolts – The seal plate and bonnet bolts shall be stainless steel (Type 316 or Type 304).

12.0 Valves 12” nominal diameter and smaller shall be directly operated by the nut on the valve stem and mounted vertically. Number of turns to open or close shall closely match the formula: (3 x D) + 2. For example, a 12” valve should open or close with approximately (3 x 12) + 2 = 38 turns of the operating nut.

13.0 Valves larger than 12” nominal diameter shall be designed to be installed horizontally and shall have bevel gear operators driven by the operating nut. Valves 14” – 24” nominal diameter shall have 4:1 bevel gear operators. Valves with 30” – 36” nominal diameters shall have 6:1 bevel gear operators and valves with 42” – 48” nominal diameters shall have 8:1 bevel gear operators. Number of turns to open or close shall closely match the formula: ((3 x D) + 2) times the bevel gear ratio. For example, a 24” valve should open or close with approximately ((3 x 24) + 2) x 4 = 296 turns of the operating nut.

GENERAL PROVISIONS

1.0 Vendor shall identify any and all exceptions to the specifications.

2.0 Vendor shall provide standard brochures for item quoted.

3.0 Vendor may be required to supply a valve for inspection and determination of coating process.

APPROVED RESILIENT SEATED GATE VALVES

A. U.S.P.
B. AFC Series 2500
C. Mueller A-2360/61
D. Clow Series F6100

INSERTION GATE VALVE

GENERAL SPECIFICATIONS

1.0 Valve shall meet the latest revision of the AWWA C-509 Standard.

2.0 Valve shall have a smooth unobstructed water way which shall be a minimum diameter of the valve.

3.0 Valve ends to be specified and shall be furnished with Cor-ten (or equal) bolts and nuts.

4.0 Valve shall be rated for 250 psi differential working pressure.

5.0 Valve Body - The body, including the stuffing box and the bonnet, shall be constructed ductile iron, meeting the latest revision of AWWA C-153.

6.0 The milled slot in the pipe wall shall be less than 2” wide.

7.0 Coatings:
- a) the internal and external valve body, including the stuffing box, bonnet, and interior of the wedge shall be fusion bonded epoxy coated with 8 mils D.F.T.
- b) interior shall meet latest version of AWWA C-550.

8.0 Bolts – The seal plate and bonnet bolts shall be stainless steel (Type 316 or Type 304).

APPROVED INSERTION VALVE:

A. EZ Valve by Advanced Valve Technologies

EXPANSION JOINT

GENERAL SPECIFICATIONS

1.0 Expansion joint shall meet the AWWA C-221 Standard.

2.0 Expansion joint shall be single end consisting of one body and one slip pipe.

3.0 Body shall be carbon steel

4.0 End connections shall be mechanical joint (retained).

5.0 Joint shall be rated for 150 psi working pressure.

6.0 Limit rods shall limit the travel of the slip pipe. The maximum travel of the slip pipe shall be 10”.

7.0 Coatings: Epoxy finish

8.0 Bolts, body studs and limit rods shall be high strength, low alloy steel with heavy, semi-finished hexagon nuts.

APPROVED EXPANSION JOINT:

A. Smith Blair 611
B. JCM 801

RESTRAINED JOINT GASKETS

GENERAL SPECIFICATIONS

1.0 All accepted restrained joint gaskets in the Portland Water District distribution system shall be rated in accordance with the performance requirements of ANSI/AWWA C111/A21.11.

2.0 Required Applications

2.1 Any hydrant branch or service with a distance greater than 18’ shall have an approved restrained joint gasket in the bell ends.

2.2 Where a casing is required, all joints within the casing shall have an approved restrained joint gasket unless restrained joint pipe is used.

2.3 At any time as required by a PWD ENGINEER.

2.4 Any live service tap where there is a joint between the connection and the end of the service.

APPROVED MANUFACTURERS

A. American Fast-Grip Gasket – American Pipe
B. Field Lok 350 Gasket – US Pipe

GENERAL SPECIFICATIONS

Reference Standard Details

1.0 Service Box - Approved Manufacturers: Laroche, Clow Canada, Bibby

1.1 Shall be 1.0” Schedule 40 steel pipe with top having 1.0” N.P.T. pipe threads for screw-on cover or coupling.

1.2 Shall be Erie style with 6’ slide-type riser.

1.3 Any extension of a service box requires a threaded merchant coupling with no set screw.

2.0 Service Box Cover – Approved Manufacturers: Bibby, Laroche, Clow Canada, QWP

2.1 Shall be Quincy type (heavy duty) cover that screws on Service Box (1.1 above).

2.2 Shall be tapped with a 1” rope thread with a solid brass plug with pentagon operating head.

3.0 Service Box Foot Piece – Approved Manufacturer: Laroche

3.1 The standard foot piece shall be heavy duty (Ford style or equal) cast iron design.

3.2 The large, heavy-duty foot piece shall have an arch that will fit over 2” ball-valve curb stops.

4.0 Service Rod – Approved Manufacturer: North American Manufacture

4.1 Shall have a self aligning design.
a) 36” length for all services.
b) 24” length for air valves.

4.2 Shall be round and constructed of stainless steel (304) with an epoxy coating (minimum 4 mil D.F.T.).

4.3 Shall have a yoke design that is an integral part of the rod.

4.4 The curb-stop attachment pin shall be a brass cotter pin.

4.5 The rod “wrench-flat” shall have a minimum thickness of ¼” tapered to 1/16” and width of 5/8” or ½”.

4.6 Diameter

a) ½”, ¾” and 1” services use ½” diameter.
b) 1 ½” and 2” services use 5/8” diameter.

GENERAL SPECIFICATIONS FOR DUCTILE IRON PIPE

1.0 The service saddle shall have the “larger sized” body, the same as associated with the “service repair” saddle, which shall have a minimum diameter of 6 in. and multiple “O” ring type sealing.

2.0 The saddle body shall be constructed of epoxy coated ductile iron.

3.0 The sealing gasket(s) shall be either Buna-N rubber or SBR rubber (ASTM D2000).

4.0 Service saddles shall be installed with all 1 1/2” and 2” corporation stops (cc only).

Approved Manufacturers

Size	Tap	Saddle
2” – 2-1/4”	¾”, 1” cc	Smith-Blair 315, Ford FC 202
4” - 12” D.I.	¾”- 11/2” cc	Smith Blair 331
4” - 12” D.I.	2” cc	Smith-Blair 313
16”	¾”-2” cc	Smith-Blair 313
20” – 36”	¾”-2”cc	Smith-Blair 366

GENERAL SPECIFICATIONS FOR PVC PIPE

1.0 Stainless steel straps will be used on saddles on C-900 PVC Pipe

Approved Manufacturers

Size	Tap	Saddle
2” – 2-1/4”	¾”, 1” cc	Smith-Blair 315, Ford FC 202
4”-12”		Smith-Blair 265

GENERAL SPECIFICATIONS FOR HDPE PIPE

1.0 Spring washers are required for service saddles on HDPE Pipe.

Approved Manufacturer

Size	Tap	Saddle
4”-12”		Smith-Blair 265

STAINLESS STEEL REPAIR CLAMPS

GENERAL SPECIFICATIONS

1.0 The sleeve shall be of full circle design; either one piece or two pieces, for pipe sizes 2” thru 12”.

2.0 Body: Shall be 18-8 stainless steel shell.

3.0 Gasket:
- a) Shall be full length and diameter of the body size;
- b) This gasket shall form a multiple O-ring, or grid, sealing barrier for the entire length and circumference;
- c) Shall be virgin SBR rubber (ASTM D2000 AA 415).

4.0 Lugs, sidebar, and lifting bar shall be heavy gauge 18-8 stainless steel with TIG/MIG welding and chemical passivation of all welds.

5.0 Bolts and Nuts shall be Teflon coated 18-8 heavy gauge stainless steel.

6.0 Armor: The armor or bridging plate between the side bars shall be heavy gauge 18-8 stainless steel bonded to the gasket to bridge the lug area.

APPROVED MANUFACTURERS

A. All Manufacturers

TAPPING SLEEVES

GENERAL SPECIFICATIONS

1.0 For sizes 12” and smaller tapping sleeve shall be ductile iron or approved fabricated steel:

1.1 Tapping sleeve shall be mechanical joint with recessed outlet flange for tapping valve.

1.2 Tapping sleeve shall conform to AWWA C-207, Class D, with rated maximum working pressure of 200 psi.

1.3 The side rubber gaskets shall be rectangular in cross-section and fit into grooved channels in the casting. These gaskets shall extend the entire length of the sleeve and shall not require cutting or trimming to match MJ end gaskets.

1.4 Tapping sleeve shall be AB-CD pattern to permit use of plain rubber and duck-tipped gaskets for various O.D. piping sizes.

1.5 Mechanical joint with accessories furnished; glands, gaskets, and Cor-Ten T-bolts and nuts or equal.

1.6 All flange outlet bolts shall be stainless steel (Type 304).

1.7 Interior and exterior to be bituminous coated with a minimum of 4 mils dry film thickness or fusion bonded epoxy coated.

1.8 The sleeve shall be provided with a ¾” F.I.P.T. test port and brass lug.

2.0 For sizes 16” and larger tapping sleeve shall be fabricated steel:

2.1 Body and Flange - A-36

2.2 Coating - Fusion-bonded epoxy coating with minimum D.F.T. of 5 mils, inside and out.

2.3 Bolts, Nuts - Stainless Steel (Type 304).

2.4 Gaskets - SBR.

2.5 Flange - AWWA Class D plate flange with ANSI 150# drilling, proper recessing for tapping valves.

2.6 Sleeves shall be provided with 3/4" F.I.P.T. test port and plug.

APPROVED MANUFACTURERS (4”-12”)

A. AFC
B. Mueller Co.
C. U.S. Pipe
D. Tyler / Union
E. Powerseal Model 3490 and 3490MJ (Fabricated Steel)

APPROVED MANUFACTURERS (16” and larger)

A. Romac FTS 420
B. Ford FTSC
C. Smith Blair 622
D. JCM 412
E. Powerseal Model 3490 and 3490 MJ (up to 24”)
F. JCM 415 or approved equal (for RCCP pipe only)

GENERAL SPECIFICATIONS

Reference Standard Details

1.0 The valve box bottom section shall be slide-type with bell-type base with bottom lip.
Manufacturer: North American Manufacture

2.0 The valve box top section shall be slide-type, 36 inches long (minimum). No top flange and no “bead” or bottom flange.
Manufacturer: North American Manufacture

3.0 The valve box cover shall be a 2” drop-type cover to fit the 7-1/4” opening of the top section.
Manufacturer: Bibby St-Croix (no substitute)

4.0 The valve box intermediate (mid) section shall be slide-type with a minimum 3” belled bottom. Base section No. 645 may be used as an alternate.
Manufacturer: North American Manufacture

5.0 Material shall be cast iron or ductile iron free from defects.

6.0 Interior and exterior of all components shall be bituminous coated with a minimum of 4 mils dry film thickness.

END OF SECTION

STANDARD DETAIL UPDATES

Standard Details and Standard Detail updates are available at:
http://www.maine.gov/mdot/contractor-consultant-information/ss_standard_details_updates.php

Detail #	Description	Revision Date
504(15)	Diaphragms	12/30/02
507(04)	Steel Bridge Railing	2/05/03
526(33)	Concrete Transition Barrier	8/18/03
645(06)	H-Beam Posts – Highway Signing	7/21/04
645(09)	Installation of Type II Signs	7/21/04
626(09)	Electrical Junction Box for Traffic Signals and Lighting	2/25/05
604(01)	Catch Basins	11/16/05
604(05)	Type “A” & “B” Catch Basin Tops	11/16/05
604(06)	Type “C” Catch Basin Tops	11/16/05
604(07)	Manhole Top “D”	11/16/05
604(09)	Catch Basin Type “E”	11/16/05
606(02)	Multiple Mailbox Support	11/16/05
606(07)	Reflectorized Beam Guardrail Delineator Details	11/16/05
609(06)	Vertical Bridge Curb	11/16/05
504(23)	Hand-Hold Details	12/08/05
609(03)	Curb Type 3	6/27/06
609(07)	Curb Type 1	6/27/06
535(01)	Precast Superstructure - Shear Key	10/12/06
535(02)	Precast Superstructure - Curb Key & Drip Notch	10/12/06
535(03)	Precast Superstructure - Shear Key	10/12/06

535(04)	Precast Superstructure - Shear Key	10/12/06
535(05)	Precast Superstructure - Post Tensioning	10/12/06
535(06)	Precast Superstructure - Sections	10/12/06
535(07)	Precast Superstructure - Precast Slab & Box	10/12/06
535(08)	Precast Superstructure - Sections	10/12/06
535(09)	Precast Superstructure - Sections	10/12/06
535(10)	Precast Superstructure - Sections	10/12/06
535(11)	Precast Superstructure - Sections	10/12/06
535(12)	Precast Superstructure - Sections	10/12/06
535(13)	Precast Superstructure - Sections	10/12/06
535(14)	Precast Superstructure - Stirrups	10/12/06
535(15)	Precast Superstructure - Plan	10/12/06
535(16)	Precast Superstructure - Reinforcing	10/12/06
535(17)	Precast Superstructure - Notes	10/12/06
801(01)	Drives on Sidewalk Sections	2/06/07
801(02)	Drives on Non-Sidewalk Sections	2/06/07
535(03)	Precast Superstructure - Shear Key	12/5/07
535(04)	Precast Superstructure - Shear Key	12/5/07
535(05)	Precast Superstructure - Post Tensioning	12/5/07
535(17)	Precast Superstructure - Notes	12/5/07
801(01)	Drives on Sidewalk Sections	1/04/08
801(02)	Drives on Non-Sidewalk Sections	1/04/08
203(03)	Backslope Rounding	1/29/08
535(02)	Precast Superstructure - Curb Key & Drip Notch	5/20/08

535(05)	Precast Superstructure - Post Tensioning	5/20/08
502(03)	Concrete Curb - Bituminous Wearing Surface	2/2/09
502(03)A	Concrete Curb - Concrete Wearing Surface	2/2/09
502(07)	Precast Concrete Deck Panels - Layout Plan	2/2/09
502(07)A	Precast Concrete Deck Panels - Layout Plan	2/2/09
502(08)	Precast Concrete Deck Panels - Panel Plan	2/2/09
502(09)	Precast Concrete Deck Panels - Blocking Detail	2/2/09
502(10)	Precast Concrete Deck Panels	2/2/09
502(11)	Precast Concrete Deck Panels	2/2/09
502(12)	Precast Concrete Deck Panels - Notes	2/2/09
502(12)A	Precast Concrete Deck Panels - Notes	2/2/09
526(06)	Permanent Concrete Barrier	2/2/09
526(08)	Permanent Concrete Barrier – Type IIIA	2/2/09
526(08)A	Permanent Concrete Barrier – Type IIIA	2/2/09
526(13)	Permanent Concrete Barrier – Type IIIB	2/2/09
526(14)	Permanent Concrete Barrier – Type IIIB	2/2/09
526(21)	Concrete Transition Barrier	2/2/09
526(39)	Texas Classic Rail – Between Window	2/2/09
526(40)	Texas Classic Rail – Through Window	2/2/09
526(41)	Texas Classic Rail – Through Post	2/2/09
526(42)	Texas Classic Rail – Through Nose	2/2/09
606(20)	Guardrail - Type 3 - Single Rail - Bridge Mounted	2/2/09
606(21)	Guardrail - Type 3 - Single Rail - Bridge Mounted	2/2/09
606(22)	Guardrail - Type 3 - Single Rail - Bridge Mounted	2/2/09

606(23)	Guardrail - Type 3 - Single Rail - Bridge Mounted	2/2/09
609(06)	Vertical Bridge Curb	2/2/09
609(08)	Precast Concrete Transition Curb	2/2/09
502(12)	Precast Concrete Desk Panels	9/09
504(22)	Diaphragm & Crossframe Notes	9/09

SUPPLEMENTAL SPECIFICATION

(Corrections, Additions, & Revisions to Standard Specifications - Revision of December 2002)

SECTION 101
CONTRACT INTERPRETATION

101.2 Definitions

Closeout Documentation Replace the sentence "A letter stating the amount….. DBE goals." with "DBE Goal Attainment Verification Form"

Add "Environmental Information Hazardous waste assessments, dredge material test results, boring logs, geophysical studies, and other records and reports of the environmental conditions. For a related provision, see Section 104.3.14 - Interpretation and Interpolation."

Add "Fabrication Engineer The Department's representative responsible for Quality Assurance of pre-fabricated products that are produced off-site."

Geotechnical Information Replace with the following: "Boring logs, soil reports, geotechnical design reports, ground penetrating radar evaluations, seismic refraction studies, and other records of subsurface conditions. For a related provision, see Section 104.3.14 - Interpretation and Interpolation."

SECTION 102
DELIVERY OF BIDS

102.7.1 Location and Time Add the following sentence "As a minimum, the Bidder will submit a Bid Package consisting of the Notice to Contractors, the completed Acknowledgement of Bid Amendments form, the completed Schedule of Items, 2 copies of the completed Agreement, Offer, & Award form, a Bid Bond or Bid Guarantee, and any other Certifications or Bid Requirements listed in the Bid Book."

102.11.1 Non-curable Bid Defects Replace E. with "E. The unit price and bid amount is not provided or a lump sum price is not provided or is illegible as determined by the Department."

SECTION 103
AWARD AND CONTRACTING

103.3.1 Notice and Information Gathering Change the first paragraph to read as follows: "After Bid Opening and as a condition for Award of a Contract, the Department may require an Apparent Successful Bidder to demonstrate to the Department's satisfaction that the Bidder is responsible and qualified to perform the Work."

SECTION 104
GENERAL RIGHTS AND RESPONSIBILITIES

104.3.14 Interpretation and Interpolation In the first sentence, change "…and Geotechnical Information." to "…Environmental Information, and Geotechnical Information."
Delete the entire Section 104.5.9 and replace with the following:

"104.5.9 Landscape Subcontractors The Contractor shall retain only Landscape Subcontractors that are certified by the Department's Environmental Office Landscape Unit."

SECTION 105
GENERAL SCOPE OF WORK

Delete the entire Section 105.6 and replace with the following:

105.6.1 Department Provided Services The Department will provide the Contractor with the description and coordinates of vertical and horizontal control points, set by the Department, within the Project Limits, for full construction Projects and other Projects where survey control is necessary. For Projects of 1,500 feet in length, or less: The Department will provide three points. For Projects between 1,500 and 5,000 feet in length: The Department will provide one set of two points at each end of the Project. For Projects in excess of 5,000 feet in length, the Department will provide one set of two points at each end of the Project, plus one additional set of two points for each mile of Project length. For non-full construction Projects and other Projects where survey control is not necessary, the Department will not set any control points and, therefore, will not provide description and coordinates of any control points. Upon request of the Contractor, the Department will provide the Department's survey data management software and Survey Manual to the Contractor, or its survey Subcontractor, for the exclusive use on the Department's Projects.

105.6.2 Contractor Provided Services Utilizing the survey information and points provided by the Department, described in Subsection 105.6.1, Department Provided Services, the Contractor shall provide all additional survey layout necessary to complete the Work. This may include, but not be limited to, reestablishing all points provided by the Department, establishing additional control points, running axis lines, providing layout and maintenance of all other lines, grades, or points, and survey quality control to ensure conformance with the Contract. The Contractor is also responsible for providing construction centerline, or close reference points, for all Utility Facilities relocations and adjustments as necessary to complete the Work. When the Work is to connect with existing Structures, the Contractor shall verify all dimensions before proceeding with the Work. The Contractor shall employ or retain competent engineering and/or surveying personnel to fulfill these responsibilities.

The Contractor must notify the Department of any errors or inconsistencies regarding the data and layout provided by the Department as provided by Section 104.3.3 - Duty to Notify Department If Ambiguities Discovered.

105.6.2.1 Survey Quality Control The Contractor is responsible for all construction survey quality control. Construction survey quality control is generally defined as, first, performing initial field survey layout of the Work and, second, performing an independent check of the initial layout using independent survey data to assure the accuracy of the initial layout; additional iterations of checks may be required if significant discrepancies are discovered in this process. Construction survey layout quality control also requires written documentation of the layout process such that the process can be followed and repeated, if necessary, by an independent survey crew.

105.6.3 Survey Quality Assurance It is the Department's prerogative to perform construction survey quality assurance. Construction survey quality assurance may, or may not, be performed by the Department. Construction survey quality assurance is generally defined as an independent check of the construction survey quality control. The construction survey quality assurance process may involve physically checking the Contractor's construction survey layout using independent survey data, or may simply involve reviewing the construction survey quality control written documentation. If the Department elects to physically check the Contractor's survey layout, the Contractor's designated surveyor may be required to be present. The Department will provide a minimum notice of 48 hours to the Contractor, whenever possible, if the Contractor's designated surveyor's presence is required. Any errors discovered through the quality assurance process shall be corrected by the Contractor, at no additional cost to the Department.

105.6.4 Boundary Markers The Contractor shall preserve and protect from damage all monuments or other points that mark the boundaries of the Right-of-Way or abutting parcels that are outside the area that must be disturbed to perform the Work. The Contractor indemnifies and holds harmless the Department from all claims to reestablish the former location of all such monuments or points including claims arising from 14 MRSA § 7554-A. For a related provision, see Section 104.3.11 - Responsibility for Property of Others.

SECTION 106
QUALITY

106.4.3 Testing Change the first sentence in paragraph three from "…maintain records of all inspections and tests." to "…maintain original documentation of all inspections, tests, and calculations used to generate reports."

106.6 Acceptance Add the following to paragraph 1 of A: "This includes Sections 401 - Hot Mix Asphalt, 402 - Pavement Smoothness, and 502 - Structural Concrete - Method A - Air Content."

Add the following to the beginning of paragraph 3 of A: "For pay factors based on Quality Level Analysis, and"

106.7.1 Standard Deviation Method Add the following to F: "Note: In cases where the mean of the values is equal to either the USL or the LSL, then the PWL will be 50 regardless of the computed value of s."

Add the following to H: "Method C Hot Mix Asphalt: PF = [55 + (Quality Level *0.5)] * 0.01"

SECTION 107
TIME

107.3.1 General Add the following: "If a Holiday occurs on a Sunday, the following Monday shall be considered a Holiday. Sunday or Holiday work must be approved by the Department, except that the Contractor may work on Martin Luther King Day, President's Day, Patriot's Day, the Friday after Thanksgiving, and Columbus Day without the Department's approval."

107.7.2 Schedule of Liquidated Damages Replace the table of Liquidated Damages as follows:

From More Than	Up to and Including	Amount of Liquidated Damages per Calendar Day
$0	$100,000	$100
$100,000	$300,000	$200
$300,000	$500,000	$400
$500,000	$1,000,000	$575
$1,000,000	$2,000,000	$750
$2,000,000	$4,000,000	$900
$4,000,000	and more	$1,875

SECTION 108
PAYMENT

Remove Section 108.4 and replace with the following:

"108.4 Payment for Materials Obtained and Stored Acting upon a request from the Contractor and accompanied by bills or receipted bills, the Department will pay for all or part of the value of acceptable, non-perishable Materials that are to be incorporated in the Work, including Materials that are to be incorporated into the Work, not delivered on the Work site, and stored at places acceptable to the Department. Examples of such Materials include steel piles, stone masonry, curbing, timber and lumber, metal Culverts, stone and sand, gravel, and other Materials. The Department will not make payment on living or perishable Materials until acceptably planted in their final locations.

If payment for Materials is made to the Contractor based on bills, only, then the Contractor must provide receipted bills to the Department for these Materials within 14 days of the date the Contractor receives payment for the Materials. Failure of the Contractor to provide receipted bills for these Materials within 14 days of the dated the Contractor receives payment will result in the paid amount being withheld from the subsequent progress payment, or payments, until such time the receipted bills are received by the Department.

Materials paid for by the Department are the property of the Department, but the risk of loss shall remain with the Contractor. Payment for Materials does not constitute Acceptance of the Material. If Materials for which the Department has paid are later found to be unacceptable, then the Department may withhold amounts reflecting such unacceptable Materials from payments otherwise due the Contractor.

In the event of Default, the Department may use or cause to be used all paid-for Materials in any manner that is in the best interest of the Department."

SECTION 109
CHANGES

109.1.1 Changes Permitted Add the following to the end of the paragraph: "There will be no adjustment to Contract Time due to an increase or decrease in quantities, compared to those estimated, except as addressed through Contract Modification(s)."

109.1.2 Substantial Changes to Major Items Add the following to the end of the paragraph: "Contract Time adjustments may be made for substantial changes to Major Items when the change affects the Critical Path, as determined by the Department"

109.4.4 Investigation / Adjustment Third sentence, delete the words "subsections (A) - (E)"

109.5.1 Definitions - Types of Delays

B. Compensable Delay Replace (1) with the following; "a weather related Uncontrollable Event of such an unusually severe nature that a Federal Emergency Disaster is declared. The Contractor will only be entitled to an Equitable Adjustment if the Project falls within the geographic boundaries prescribed under the disaster declaration."

109.7.2 Basis of Payment Replace with the following: "Equitable Adjustments will be established by mutual Agreement for compensable items listed in Section 109.7.3-Compensable Items, based upon Unit or Lump Sum Prices. If Agreement cannot be reached, the Contractor shall accept payment on a Force Account basis as provided in Section 109.7.5 - Force Account Work, as full and complete compensation for all Work relating to the Equitable Adjustment."

109.7.3 Compensable Items Replace with the following: "The Contractor is entitled to compensation for the following items, with respect to agreed upon Unit or Lump Sum Prices:

1. Labor expenses for non-salaried Workers and salaried foremen.

2. Costs for Materials.

3. A 15 % markup on the totals of Items 1 and 2 of this subsection 109.7.3 for home office overhead and profit of the Contractor, its Subcontractors and suppliers, and any lower tier Subcontractors or suppliers, with no mark-ups on mark-ups.

4. Cost for Equipment, based on Blue Book Rates or leased rates, as set forth in Section 109.7.5(C), or the Contractor's Actual Costs if determined by the Department to be lower.

5. Time.

6. Subcontractor quoted Work, as set forth below in Section 109.7.5 (F)."

109.7.5 Force Account Work

C. Equipment

Paragraph 2, delete sentence 1 which starts; "Equipment leased…."

Paragraph 6, change sentence 2 from "The Contractor may furnish…" to read "If requested by the Department, the Contractor will produce cost data to assist the Department in the establishment of such rental rate, including all records that are relevant to the Actual Costs including rental Receipts, acquisition costs, financing documents, lease Agreements, and maintenance and operational cost records."
Add the following paragraph; "Equipment leased by the Contractor for Force Account Work and actually used on the Project will be paid for at the actual invoice amount plus 10% markup for administrative costs."

Add the following section;

"F. Subcontractor Work When accomplishing Force Account Work that utilizes Subcontractors, the Contractor will be allowed a maximum markup of 5% for profit and overhead on the Subcontractor's portion of the Force Account Work."

SECTION 110
INDEMNIFICATION, BONDING, AND INSURANCE

Delete the entire Section 110.2.3 and replace with the following:

110.2.3 Bonding for Landscape Establishment Period The Contractor shall provide a signed, valid, and enforceable Performance, Warranty, or Maintenance Bond complying with the Contract, to the Department at Final Acceptance.

The bond shall be in the full amount for all Pay Items for work pursuant to Sec 621, Landscape, payable to the "Treasurer - State of Maine," and on the Department's forms, on exact copies thereof, or on forms that do not contain any significant variations from the Department's forms as solely determined by the Department.

The Contractor shall pay all premiums and take all other actions necessary to keep said bond in effect for the duration of the Landscape Establishment Period described in Special Provision 621.0036 - Establishment Period. If the Surety becomes financially insolvent, ceases to be licensed or approved to do business in the State of Maine, or stops operating in the United States, the Contractor shall file new bonds complying with this Section within 10 Days of the date the Contractor is notified or becomes aware of such change.

All Bonds shall be procured from a company organized and operating in the United States, licensed or approved to do business in the State of Maine by the State of Maine Department of Business Regulation, Bureau of Insurance, and listed on the latest Federal Department of the Treasury listing for "Companies Holding Certificates of Authority as Acceptable Sureties on Federal Bonds and as Acceptable Reinsuring Companies."

By issuing a bond, the Surety agrees to be bound by all terms of the Contract, including those related to payment, time for performance, quality, warranties, and the Department's self-

help remedy provided in Section 112.1 - Default to the same extent as if all terms of the Contract are contained in the bond(s).

Regarding claims related to any obligations covered by the bond, the Surety shall provide, within 60 Days of Receipt of written notice thereof, full payment of the entire claim or written notice of all bases upon which it is denying or contesting payment. Failure of the Surety to provide such notice within the 60-day period constitutes the Surety's waiver of any right to deny or contest payment and the Surety's acknowledgment that the claim is valid and undisputed.

SECTION 202
REMOVING STRUCTURES AND OBSTRUCTIONS

202.02 Removing Buildings Make the following change to the last sentence in the final paragraph, change "…Code of Maine Regulations 401." to "…Department of Environmental Protection Maine Solid Waste Management Rules, 06-096 CMR Ch. 401, Landfill Siting, Design and Operation."

SECTION 203
EXCAVATION AND EMBANKMENT

203.01 Description Under b. Rock Excavation; add the following sentence: "The use of perchlorate is not allowed in blasting operations."

Delete the entire Section 203.041 and replace with the following:
"203.041 Salvage of Existing Hot Mix Asphalt Pavement All existing hot mix asphalt pavement designated to be removed under this contract must be salvaged for utilization. Existing hot mix asphalt pavement material shall not be deposited in any waste area or be placed below subgrade in any embankment.

Methods of utilization may be any of the following:

1. Used as a replacement for untreated aggregate surface course on entrances provided the material contains no particles greater than 50 mm [2 in] in any dimension. Payment will be made under Pay Item 411.09, Untreated Aggregate Surface Course or 411.10, Untreated Aggregate Surface Course, Truck Measure. Material shall be placed, shaped, compacted and stabilized as directed by the Resident.

2. Stockpiled at commercial or approved sites for commercial or MaineDOT use.

3. Other approved methods proposed by the Contractor, and approved by the Resident which will assure proper use of the existing hot mix asphalt pavement.

The cost of salvaging hot mix asphalt material will be included for payment under the applicable pay item, with no additional allowances made, which will be full compensation for removing, temporarily stockpiling, and rehandling, if necessary, and utilizing the material in entrances or other approved uses, or stockpiling at an approved site as described above. The

material will also be measured and paid for under the applicable Pay Item if it is reused for aggregate in entrances, or other approved uses."

SECTION 502
STRUCTURAL CONCRETE

502.05 Composition and Proportioning; TABLE #1; NOTE #2; third sentence; Change "…alcohol based saline sealer…" to "alcohol based silane sealer…". Add NOTE #6 to Class S Concrete.

502.0502 Quality Assurance Method A - Rejection by Resident Change the first sentence to read: "For an individual sublot with test results failing to meet the criteria in Table #1, or if the calculated pay factor for Air Content is less than 0.80……"

502.0503 Quality Assurance Method B - Rejection by Resident Change the first sentence to read: "For material represented by a verification test with test results failing to meet the criteria in Table #1, the Department will……"

502.0505 Resolution of Disputed Acceptance Test Results Combine the second and third sentence to read: "Circumstances may arise, however, where the Department may ……"
502.10 Forms and False work

D. Removal of Forms and False work 1., First paragraph; first, second, and third sentence; replace "forms" with "forms and false work"

502.11 Placing Concrete

G. Concrete Wearing Surface and Structural Slabs on Precast Superstructures Last paragraph; third sentence; replace "The temperature of the concrete shall not exceed 24° C [75° F} at the time of placement." with "The temperature of the concrete shall not exceed 24° C [75° F} at the time the concrete is placed in its final position."

502.15 Curing Concrete First paragraph; replace the first sentence with the following; "All concrete surfaces shall be kept wet with clean, fresh water for a curing period of at least 7 days after concrete placing, with the exception of vertical surfaces as provided for in Section 502.10 (D) - Removal of Forms and False work."

Second paragraph; delete the first two sentences.

Third paragraph; delete the entire paragraph which starts "When the ambient temperature…."

Fourth paragraph; delete "approved" to now read "…continuously wet for the entire curing period…"

Fifth paragraph; second sentence; change "…as soon as it is possible to do so without damaging the concrete surface." to "…as soon as possible."

Seventh paragraph; first sentence; change "…until the end of the curing period." to "…until the end of the curing period, except as provided for in Section 502.10(D) - Removal of Forms and False work."

502.19 Basis of Payment First paragraph, second sentence; add "pier nose armor" to the list of items included in the contract price for concrete.

SECTION 503
REINFORCING STEEL

503.06 Placing and Fastening Change the second paragraph, first sentence from: "All tack welding shall be done in accordance with Section 504, Structural Steel." to "All tack welding shall be done in accordance with AWS D1.4 Structural Welding Code - Reinforcing Steel."

SECTION 504
STRUCTURAL STEEL

504.09 Facilities for Inspection Add the follow as the last paragraph: "Failure to comply with the above requirements will be consider to be a denial to allow access to work by the Contractor. The Department will reject any work done when access for inspection is denied."

504.18 Plates for Fabricated Members Change the second paragraph, first sentence from: "…ASTM A 898/A 898 M…" to "…ASTM A 898/A 898 M or ASTM A 435/A 435 M as applicable and…"

504.31 Shop Assembly Add the following as the last sentence: "The minimum assembly length shall include bearing centerlines of at least two substructure units."

504.64 Non Destructive Testing-Ancillary Bridge Products and Support Structures Change the third paragraph, first sentence from "One hundred percent…" to "Twenty five percent…"

SECTION 535
PRECAST, PRESTRESSED CONCRETE SUPERSTRUCTURE

535.02 Materials Change "Steel Strand for Concrete Reinforcement" to "Steel Strand." Add the following to the beginning of the third paragraph; "Concrete shall be Class P conforming to the requirements in this section. 28 day compressive strength shall be as stated on the plans. Coarse aggregate…."

535.05 Inspection Facilities Add the follow as the last paragraph: "If the above requirements are not met, the Contractor shall be considered to be in violation of Standard Specification 104.2.5 – Right to Inspect Work. All work occurring during a violation of this specification will be rejected."

535.26 Lateral Post-Tensioning Replace the first paragraph; "A final tension…" with "Overstressing strands for setting losses cannot be accomplished for chuck to chuck lengths of 7.6 m [25 ft] and less. In such instances, refer to the Plans for all materials and methods.

Otherwise, post-tensioning shall be in accordance with PCI standards and shall provide the anchorage force noted in the Plans. The applied jacking force shall be no less than 100% of the design jacking force."

SECTION 603
PIPE CULVERTS AND STORM DRAINS

603.0311 Corrugated Polyethylene Pipe for Option III Replace the Minimum Mandrel Diameter Table with the following:

Nominal Size US Customary (in)	Minimum Mandrel Diameter (in)	Nominal Size Metric (mm)	Minimum Mandrel Diameter (mm)
12	11.23	300	280.73
15	14.04	375	350.91
18	16.84	450	421.09
24	22.46	600	561.45
30	28.07	750	701.81
36	33.69	900	842.18
42	39.30	1050	982.54
48	44.92	1200	1122.90

SECTION 604
MANHOLES, INLETS, AND CATCH BASINS

604.02 Materials Add the following:

"Tops and Traps	712.07
Corrugated Metal Units	712.08
Catch Basin and Manhole Steps	712.09"

SECTION 605
UNDERDRAINS

605.05 Underdrain Outlets Make the following change:

In the first paragraph, second sentence, delete the words "metal pipe".

SECTION 606
GUARDRAIL

606.02 Materials Delete the entire paragraph which reads "The sole patented supplier of multiple mailbox…." and replace with "Acceptable multiple mailbox assemblies shall be listed on the Department's Approved Products List and shall be NCHRP 350 tested and approved."
Delete the entire paragraph which reads "Retroreflective beam guardrail delineators…." and replace with "Reflectorized sheeting for Guardrail Delineators shall meet the requirements of Section 719.01 - Reflective Sheeting. Delineators shall be fabricated from high-impact, ultraviolet and weather resistant thermoplastic.

606.09 Basis of Payment First paragraph; delete the second and third sentence in their entirety and replace with "Butterfly-type guardrail reflectorized delineators shall be mounted on all W-beam guardrail at an interval of every 10 posts [62.5 ft] on tangents sections and every 5 posts [31.25 ft] on curved sections as directed by the Resident. On divided highways, the delineators shall be yellow on the left hand side and silver/white on the right hand side. On two-way roadways, the delineators shall be silver/white on the right hand side. All delineators shall have retroreflective sheeting applied to only the traffic facing side. Reflectorized guardrail delineators will not be paid for directly, but will be considered incidental to the guardrail items."

SECTION 609
CURB

609.04 Bituminous Curb f., Delete the requirement "Color Natural (White)"

SECTION 610
STONE FILL, RIPRAP, STONE BLANKET, AND STONE DITCH PROTECTION

Add the following paragraph to Section 610.02:
"Materials shall meet the requirements of the following Sections of Special Provision 703:

Stone Fill	703.25
Plain and Hand Laid Riprap	703.26
Stone Blanket	703.27
Heavy Riprap	703.28
Definitions	703.32"

Add the following paragraph to Section 610.032.a.
"Stone fill and stone blanket shall be placed on the slope in a well-knit, compact and uniform layer. The surface stones shall be chinked with smaller stone from the same source."

Add the following paragraph to Section 610.032.b:
"Riprap shall be placed on the slope in a well-knit, compact and uniform layer. The surface stones shall be chinked with smaller stone from the same source."

Add the following to Section 610.032: "Section 610.032.d. The grading of riprap, stone fill, stone blanket and stone ditch protection shall be determined by the Resident by visual inspection of the load before it is dumped into place, or, if ordered by the Resident, by dumping individual loads on a flat surface and sorting and measuring the individual rocks contained in the load. A separate, reference pile of stone with the required gradation will be placed by the Contractor at a convenient location where the Resident can see and judge by eye the suitability of the rock being placed during the duration of the project. The Resident reserves the right to reject stone at the job site or stockpile, and in place. Stone rejected at the job site or in place shall be removed from the site at no additional cost to the Department."

SECTION 615
LOAM

615.02 Materials Make the following change:

Organic Content	Percent by Volume
Humus	"5% - 10%", as determined by Ignition Test

SECTION 618
SEEDING

618.01 Description Change the first sentence to read as follows: "This work shall consist of furnishing and applying seed ….." Also remove ",and cellulose fiber mulch" from 618.01(a).
618.03 Rates of Application In 618.03(a), remove the last sentence and replace with the following: "These rates shall apply to Seeding Method 2, 3, and Crown Vetch."

In 618.03(c) "1.8 kg [4 lb]/unit." to "1.95 kg [4 lb]/unit."

618.09 Construction Method In 618.09(a) 1, sentence two, replace "100 mm [4 in]" with "25 mm [1 in] (Method 1 areas) and 50 mm [2 in] (Method 2 areas)"

618.15 Temporary Seeding Change the Pay Unit from Unit to Kg [lb].

SECTION 620
GEOTEXTILES

620.03 Placement Section (c)

Title: Replace "Non-woven" in title with "Erosion Control".
First Paragraph: Replace first word "Non-woven" with "Woven monofilament".
Second Paragraph: Replace second word "Non-woven" with "Erosion Control".

620.07 Shipment, Storage, Protection and Repair of Fabric Section (a)

Replace the second sentence with the following: "Damaged geotextiles, as identified by the Resident, shall be repaired immediately."

620.09 Basis of Payment

Pay Item 620.58: Replace "Non-woven" with "Erosion Control"
Pay Item 620.59: Replace "Non-woven" with "Erosion Control"

SECTION 621
LANDSCAPING

621.0036 Establishment Period In paragraph 4 and 5, change "time of Final Acceptance" to "end of the period of establishment". In Paragraph 7, change "Final Acceptance date" to ""end of the period of establishment" and change "date of Final Acceptance" to "end of the period of establishment".

SECTION 626
HIGHWAY SIGNING

626.034 Concrete Foundations Add to the following to the end of the second paragraph: "Pre-cast and cast-in-place foundations shall be warranteed against leaning and corrosion for two years after the project is completed. If the lean is greater than 2 degrees from normal or the foundation is spalling within the first two years, the Contractor shall replace the foundation at no extra cost."

SECTION 627
PAVEMENT MARKINGS

627.10 Basis of Payment Add to the following to the end of the third paragraph: "If allowed by Special Provision, the Contractor may utilize Temporary Bi-Directional Yellow and White(As required) Delineators as temporary pavement marking lines and paid for at the contract lump sum price. Such payment will include as many applications as required and removal."

SECTION 637
DUST CONTROL

637.06 Basis of Payment Add the following after the second sentence of the third paragraph: "Failure by the Contractor to follow Standard Specification or Special Provision - Section 637 and/or the Contractor's own Soil Erosion and Pollution Control Plan concerning Dust Control and/or the Contractor's own Traffic Control Plan concerning Dust Control and/or visible evidence of excessive dust problems, as determined by the Resident, will result in a reduction in payment, computed by reducing the Lump Sum Total by 5% per occurrence per day. The Department's Resident or any other representative of the Department reserves the right to suspend the work at any time and request a meeting to discuss violations and remedies. The Department shall not be held responsible for any delay in the work due to any suspension under this item. Additional penalties may also be assessed in accordance with Special Provision 652 - Work Zone Traffic Control and Standard Specification 656 - Temporary Soil Erosion and Water Pollution Control."

SECTION 639
ENGINEERING FACILITIES

639.04 Field Offices Change the forth to last paragraph from: "The Contractor shall provide a fully functional desktop copier…" to "….desktop copier/scanner…"

Description Change "Floor Area" to "Floor Area (Outside Dimension)". Change Type B floor area from "15 (160)" to "20 (217)".

639.09 Telephone Paragraph 1 is amended as follows:
The contractor shall provide **two** telephone lines and two telephones,….

Add- In addition the contractor will supply one computer broadband connection, modem lease and router. The router shall have wireless access and be 802.11n or 802.11g capable and

wireless The type of connection supplied will be contingent upon the availability of services (i.e. DSL or Cable Broadband). It shall be the contractor's option to provide dynamic or static IP addresses through the service. **The selected service will have a minimum downstream connection of 1.5 Mbps and 384 Kbps upstream.** The contractor shall be responsible for the installation charges and all reinstallation charges following suspended periods. Monthly service and maintenance charges shall be billed by the Internet Service Provider (ISP) directly to the contractor.

SECTION 652
MAINTENANCE OF TRAFFIC

652.2.3 Flashing Arrow Board Delete the existing 5 paragraphs and replace with the following: Flashing Arrow Panels (FAP) must be of a type that has been submitted to AASHTO's National Transportation Product Evaluation Program (NTPEP) for evaluation and placed on the Maine Department of Transportations' Approved Products List of Portable Changeable Message Signs & Flashing Arrow Panels.

FAP units shall meet requirements of the current Manual on Uniform Traffic Control Devices (MUTCD) for Type "C" panels as described in Section 6F.56 - Temporary Traffic Control Devices. An FAP shall have matrix of a minimum of 15 low-glare, sealed beam, Par 46 elements capable of either flashing or sequential displays as well as the various operating modes as described in the MUTCD, Chapter 6-F. If an FAP consisting of a bulb matrix is used, each element should be recess-mounted or equipped with an upper hood of not less than 180 degrees. The color presented by the elements shall be yellow.

FAP elements shall be capable of at least a 50 percent dimming from full brilliance. Full brilliance should be used for daytime operation and the dimmed mode shall be used for nighttime operation. FAP shall be at least 2.4 M x 1.2 M [96" x 48"] and finished in non-reflective black. The FAP shall be interpretable for a distance not less than 1.6 km [1 mile].

Operating modes shall include, flashing arrow, sequential arrow, sequential chevron, flashing double arrow, and flashing caution. In the three arrow signals, the second light from the arrow point shall not operate.

The minimum element on-time shall be 50 percent for the flashing mode, with equal intervals of 25 percent for each sequential phase. The flashing rate shall be not less than 25 nor more than 40 flashes per minute. All on-board circuitry shall be solid state.

Primary power source shall be 12 volt solar with a battery back-up to provide continuous operation when failure of the primary power source occurs, up to 30 days with fully charged batteries. Batteries must be capable of being charged from an onboard 110 volt AC power source and the unit shall be equipped with a cable for this purpose.

Controller and battery compartments shall be enclosed in lockable, weather-tight boxes.
The FAP shall be mounted on a pneumatic-tired trailer or other suitable support for hauling to various locations, as directed. The minimum mounting height of an arrow panel should be 2.1 M [7 feet] from the roadway to the bottom of the panel.

The face of the trailer shall be delineated on a permanent basis by affixing retro-reflective material, known as conspicuity material, in a continuous line as seen by oncoming drivers.

A portable changeable message sign may be used to simulate an arrow panel display."

652.2.4 Other Devices Delete the last paragraph and add the following:
"652.2.5 Portable Changeable Message Sign Trailer mounted Portable Changeable Message Signs (PCMS) must be of a type that has been submitted to AASHTO's National Transportation Product Evaluation Program (NTPEP) for evaluation and placed on the Maine Department of Transportations' Approved Products List of Portable Changeable Message Signs & Flashing Arrow Panels. The PCMS unit shall meet or exceed the current specifications of the Manual on Uniform Traffic Control Devices (MUTCD), 6F.55.

The front face of the sign should be covered with a low-glare protective material. The color of the LED elements shall be amber on a black background. The PCMS should be visible from a distance of 0.8 km [0.5 mile] day and night and have a minimum 15º viewing angle. Characters must be legible from a distance of at least 200 M [650 feet].

The message panel should have adjustable display rates (minimum of 3 seconds per phase), so that the entire message can be read at least twice at the posted speed, the off-peak 85th-percentile speed prior to work starting, or the anticipated operating speed. Each message shall consist of either one or two phases. A phase shall consist of up to eight characters per line. The unit must be capable of displaying at least three lines of text with eight characters per line. Each character shall be 457 mm [18"] high. Each character module shall use at least a five wide and seven high pixel matrix. The text of the messages shall not scroll or travel horizontally or vertically across the face of the sign.

Units shall automatically adjust their brightness under varying light conditions to maintain legibility.

The control system shall include a display screen upon which messages can be reviewed before being displayed on the message sign. The control system shall be capable of maintaining memory when power is unavailable. Message must be changeable with either a notebook computer or an on-board keypad. The controller shall have the capability to store a minimum of 200 user-defined and 200 pre-programmed messages. Controller and battery compartments shall be enclosed in lockable, weather-tight boxes.

PCMS units shall have the capability of being made programmable by means of wireless communications. PCMS units shall also be fully capable of having an on-board radar system installed if required for a particular application.

PCMS' primary power source shall be solar with a battery back-up to provide continuous operation when failure of the primary power source occurs. Batteries must be capable of being charged from a 110 volt AC power source. The unit must also be capable of being operated solely from a 110 volt AC power source and be equipped with a cable for this purpose.

The PCMS shall be mounted on a trailer in such a way that the bottom of the message sign panel shall be a minimum of 2.1 M [7 ft] above the roadway in urban areas and 1.5 M [5 ft]

above the roadway in rural areas when it is in the operating mode. PCMS trailers should be of a heavy duty type with a 51 mm [2"] ball hitch and a minimum of four leveling jacks (at each corner). The sign shall be capable of being rotated 360° relative to the trailer. The face of the trailer shall be delineated on a permanent basis by affixing retro-reflective material, known as conspicuity material, in a continuous line as seen by oncoming drivers."

652.3.3 Submittal of Traffic Control Plan In item e. change "A list of all certified flaggers…" to "A list of all the Contractor's certified flaggers…" In the last paragraph add the following as the second sentence: "The Department will review and provide comments to the Contractor within 14 days of receipt of the TCP." Add the following as the last sentence: "The creation and modification of the TCP will be considered incidental to the related 652 items."

652.3.5 Installation of Traffic Control Devices In the first paragraph, first sentence; change "Signs shall be erected…" to "Portable signs shall be erected.." In the third sentence; change "Signs must be erected so that the sign face…" to "Post-mounted signs must also be erected so that the sign face…"

652.4 Flaggers Replace the first paragraph with the following; "The Contractor shall furnish flaggers as required by the TCP or as otherwise specified by the Resident. All flaggers must have successfully completed a flagger test approved by the Department and administered by a Department-approved Flagger-Certifier who is employing that flagger. All flaggers must carry an official certification card with them while flagging that has been issued by their employer. Flaggers shall wear safety apparel meeting ANSI 107-1999 Class 2 risk exposure and clearly identify the wearer as a person, shall be visible at a minimum distance of 300 m [1000 ft], and shall wear a hardhat with retroreflectivity. For nighttime conditions, Class 3 apparel should be considered, retroreflective or flashing SLOW/STOP paddles shall be used, and except in emergency situations the flagger station shall be illuminated to assure visibility."

Second paragraph, first sentence; change "…have sufficient distance to stop before entering the workspace." to "…have sufficient distance to stop at the intended stopping point." Third sentence; change "At a spot obstruction…" to "At a spot obstruction with adequate sight distance,…"

Fourth paragraph, delete and replace with "Flaggers shall be provided as a minimum, a 10 minute break, every 2 hours and a 30 minute or longer lunch period away from the work station. Flaggers may only receive 1 unpaid break per day; all other breaks must be paid. Sufficient certified flaggers shall be available onsite to provide for continuous flagging operations during break periods. Breaker flaggers will not be paid for separately, but shall be considered incidental to the appropriate pay item."

652.8.2 Other Items Replace the last paragraph with the following: "There will be no payment made under any 652 pay items after the expiration of the adjusted total contract time."

SECTION 653
POLYSTYRENE PLASTIC INSULATION

653.05 Placing Backfill In the second sentence; change "…shall be not less than 150 mm [6 in] loose measure." to "…shall be not less than 250 mm [10 in] loose measure." In the third

sentence; change "…crawler type bulldozer of not more than 390 kg/m^2 [80 lb/ft^2] ground contact pressure…" to "…crawler type bulldozer of not more than 4875 kg/m^2 [2000 lb/ft^2] ground contact pressure…"

653.06 Compaction In the last sentence; change "…not more than 390 kg/m^2 [80 lb/ft^2] ground contact…" to "…not more than 4875 kg/m^2 [2000 lb/ft^2] ground contact…"

SECTION 656
TEMPORARY SOIL EROSION AND WATER POLLUTION CONTROL

656.5.1 If Pay Item 656.75 Provided Replace the second paragraph with the following: "Failure by the Contractor to follow Standard Specification or Special Provision - Section 656 and/or the Contractor's own Soil Erosion and Pollution Control Plan will result in a reduction in payment, computed by reducing the Lump Sum Total by 5% per occurrence per day. The Department's Resident or any other representative of the Department reserves the right to suspend the work at any time and request a meeting to discuss violations and remedies. The Department shall not be held responsible for any delay in the work due to any suspension under this item."

SECTION 701
STRUCTURAL CONCRETE RELATED MATERIALS

701.10 Fly Ash - Chemical Requirements Change all references from "ASTM C311" to "ASTM C114".

SECTION 703
AGGREGATES

703.05 Aggregate for Sand Leveling Change the percent passing the 9.5 mm [3/8 in] sieve from "85 – 10" to "85 – 100"

703.06 Aggregate for Base and Subbase Delete the first paragraph: "The material shall have…" and replace with "The material shall have a minimum degradation value of 15 as determined by Washington State DOT Test Method T113, Method of Test for Determination of Degradation Value (March 2002 version), except that the reported degradation value will be the result of testing a single specimen from that portion of a sample that passes the 12.5 mm [½ in] sieve and is retained on the 2.00 mm [No. 10] sieve, minus any reclaimed asphalt pavement used."

703.07 Aggregates for HMA Pavements Delete the forth paragraph: "The composite blend shall have…" and replace with "The composite blend, minus any reclaimed asphalt pavement used, shall have a Micro-Deval value of 18.0 or less as determined by AASHTO T 327. In the event the material exceeds the Micro Deval limit, a Washington Degradation test shall be performed. The material shall be acceptable if it has a value of 30 or more as determined by Washington State DOT Test Method T 113, Method of Test for Determination of Degradation Value (March 2002 version) except that the reported degradation value will be the result of testing a single composite specimen from that portion of the sample that passes the 12.5mm

[1/2 inch] sieve and is retained on the 2.00mm [No 10] sieve, minus any reclaimed asphalt pavement used."

703.09 HMA Mixture Composition The coarse and fine aggregate shall meet the requirements of Section 703.07. The several aggregate fractions for mixtures shall be sized, graded, and combined in such proportions that the resulting composite blends will meet the grading requirements of the following table.

AGGREGATE GRADATION CONTROL POINTS

SIEVE SIZE	Nominal Maximum Aggregate Size---Control Points (Percent Passing)				
	TYPE 25 mm	TYPE 19 mm	TYPE 12.5 mm	TYPE 9.5 mm	TYPE 4.75 mm
	PERCENT BY WEIGHT PASSING - COMBINED AGGREGATE				
37.5 mm	100				
25 mm	90-100	100			
19 mm	-90	90-100	100		
12.5 mm		-90	90-100	100	100
9.5 mm		-	-90	90-100	95-100
4.75 mm		-	-	-90	80-100
2.36 mm	19-45	23-49	28-58	32-67	40 - 80
1.18 mm		-	-	-	-
600 µm		-	-	-	-
300 µm		-	-	-	-
75 µm	1-7	2-8	2-10	2-10	2-10

Gradation Classification---- The combined aggregate gradation shall be classified as coarse-graded when it passes below the Primary Control Sieve (PCS) control point as defined in the following table. All other gradations shall be classified as fine-graded.

GRADATION CLASSIFICATION

PCS Control Point for Mixture Nominal Maximum Aggregate Size (% passing)				
Nominal Maximum Aggregate Size	TYPE 25 mm	TYPE 19 mm	TYPE 12.5 mm	TYPE 9.5 mm
Primary Control Sieve	4.75 mm	4.75 mm	2.36 mm	2.36 mm
PCS Control Point (% passing)	40	47	39	47

If a Grading "D" mixture is allowed per Special Provision Section 403, it shall meet the following gradation and the aggregate requirements of Section 703.07.

Sieve Designation	Percentage by Weight Passing Square Mesh Sieves
½ inch	100
⅜ inch	93-100
No. 4	60-80
No. 8	46-65

No. 16	25-55
No. 30	16-40
No. 50	10-30
No. 100	6-22
No. 200	3.0-8.0

703.18 Common Borrow Replace the first paragraph with the following: "Common borrow shall consist of earth, suitable for embankment construction. It shall be free from frozen material, perishable rubbish, peat, and other unsuitable material including material currently or previously contaminated by chemical, radiological, or biological agents unless the material is from a DOT project and authorized by DEP for use."

703.22 Underdrain Backfill Material Change the first paragraph from "…for Underdrain Type B…" to "…for Underdrain Type B and C…"

Replace subsections 703.25 through 703.28 with the following:
"703.25 Stone Fill Stones for stone fill shall consist of hard, sound, durable rock that will not disintegrate by exposure to water or weather. Stone for stone fill shall be angular and rough. Rounded, subrounded, or long thin stones will not be allowed. Stone for stone fill may be obtained from quarries or by screening oversized rock from earth borrow pits. The maximum allowable length to thickness ratio will be 3:1. The minimum stone size (10 lbs) shall have an average dimension of 5 inches. The maximum stone size (500 lbs) shall have a maximum dimension of approximately 36 inches. Larger stones may be used if approved by the Resident. Fifty percent of the stones by volume shall have an average dimension of 12 inches (200 lbs).

703.26 Plain and Hand Laid Riprap Stone for riprap shall consist of hard, sound durable rock that will not disintegrate by exposure to water or weather. Stone for riprap shall be angular and rough. Rounded, subrounded or long thin stones will not be allowed. The maximum allowable length to width ratio will be 3:1. Stone for riprap may be obtained from quarries or by screening oversized rock from earth borrow pits. The minimum stone size (10 lbs) shall have an average dimension of 5 inches. The maximum stone size (200 lbs) shall have an average dimension of approximately 12 inches. Larger stones may be used if approved by the Resident. Fifty percent of the stones by volume shall have an average dimension greater than 9 inches (50 lbs).

703.27 Stone Blanket Stones for stone blanket shall consist of sound durable rock that will not disintegrate by exposure to water or weather. Stone for stone blanket shall be angular and rough. Rounded or subrounded stones will not be allowed. Stones may be obtained from quarries or by screening oversized rock from earth borrow pits. The minimum stone size (300 lbs) shall have minimum dimension of 14 inches, and the maximum stone size (3000 lbs) shall have a maximum dimension of approximately 66 inches. Fifty percent of the stones by volume shall have average dimension greater than 24 inches (1000 lbs).

703.28 Heavy Riprap Stone for heavy riprap shall consist of hard, sound, durable rock that will not disintegrate by exposure to water or weather. Stone for heavy riprap shall be angular and rough. Rounded, subrounded, or thin, flat stones will not be allowed. The maximum allowable length to width ratio will be 3:1. Stone for heavy riprap may be obtained from quarries or by screening oversized rock from earth borrow pits. The minimum stone size (500

lbs) shall have minimum dimension of 15 inches, and at least fifty percent of the stones by volume shall have an average dimension greater than 24 inches (1000 lbs)."

Add the following paragraph:
"703.32 Definitions (ASTM D 2488, Table 1).
Angular: Particles have sharp edges and relatively plane sides with unpolished surfaces
Subrounded: Particles have nearly plane sides but have well-rounded corners and edges
Rounded: Particles have smoothly curved sides and no edges"

SECTION 706
NON-METALLIC PIPE

706.06 Corrugated Polyethylene Pipe for Underdrain, Option I and Option III Culvert Pipe Change the first sentence from "…300 mm diameters to 900 mm" to "…300 mm diameters to 1200 mm" Delete, in it's entirety, the last sentence which begins "This pipe and resins…" and replace with the following; "The manufacturing plants of polyethylene pipe shall be certified by the Eastern States Consortium. Polyethylene pipe shall be accepted based on third party certification by the AASHTO's National Transportation Product Evaluation Program."

SECTION 709
REINFORCING STEEL AND WELDED STEEL WIRE FABIC

709.03 Steel Strand Change the second paragraph from "…shall be 12mm [½ inch] AASHTO M203M/M203 (ASTM A416/A416M)…" to "…shall be 15.24 mm [0.600 inch] diameter AASHTO M203 (ASTM A416)…"

SECTION 710
FENCE AND GUARDRAIL

710.03 Chain Link Fabric Add the following sentence: "Chain Link fabric for PVC coated shall conform to the requirements of AASHTO M181, Type IV-Class B."

710.04 Metal Beam Rail Replace with the following: "Galvanized steel rail elements shall conform to the requirements of AASHTO M 180, Class A, Type II.

When corrosion resistant steel is specified, rail shall conform to AASHTO M 180, Class A, Type IV. Beams of corrosion resistant steel shall not be painted or galvanized. They shall be so handled and stored that the traffic face of these beams, used in a continuous run of guardrail, shall not show a distinctive color differential.

When metal beam rail is to be installed on a curve having a radius of curvature of 150 ft. or less, the beam sections shall be fabricated on an arc to the required radius and permanently stamped or embossed with the designated radius.

The engineer may take one piece of guardrail, a backup plate, and end or buffer section from each 200 pieces in a lot, or from each lot if less than 200 pieces are included therein for determination of compliance with specification requirements. If one piece fails to conform to

the requirements of this specification, two other pieces shall be tested. If either of these pieces fails to conform to the requirements of this specification, the lot of material represented by these samples shall be rejected. A lot shall be considered that quantity of material offered for inspection at one time that bears the same heat and coating identification."

710.07 Guardrail Posts Section b. change "…AASHTO M183/M183M…" to "…AASHTO M 270M/M 270 Grade 250 (36)…"

SECTION 712
MISCELLANEOUS HIGHWAY MATERIALS

712.06 Precast Concrete Units In the first paragraph, change "…ASTM C478M…" to "…AASHTO M199…" Delete the second paragraph and replace with the following; "Approved structural fibers may be used as a replacement of 6 x 6 #10 gauge welded wire fabric when used at an approved dosage rate for the construction of manhole and catch basin units. The material used shall be one of the products listed on the Maine Department of Transportation's Approved Product List of Structural Fiber Reinforcement." Delete the fifth paragraph and replace with the following; "The concrete mix design shall be approved by the Department. Concrete shall contain 6% air content, plus or minus 1½% tolerance when tested according to AASHTO T152. All concrete shall develop a minimum compressive strength of 28 MPa [4000 psi] in 28 days when tested according to AASHTO T22. The absorption of a specimen, when tested according to AASHTO T280, Test Method "A", shall not exceed nine percent of the dry mass."

Add the following:
"712.07 Tops, and Traps These metal units shall conform to the plan dimensions and to the following specification requirements for the designated materials.

Gray iron or ductile iron castings shall conform to the requirements of AASHTO M306 unless otherwise designated."

712.08 Corrugated Metal Units The units shall conform to plan dimensions and the metal to AASHTO M36/M36M. Bituminous coating, when specified, shall conform to AASHTO M190 Type A.

712.09 Catch Basin and Manhole Steps Steps for catch basins and for manholes shall conform to ASTM C478M [ASTM C478], Section 13 for either of the following material:

(a) Aluminum steps-ASTM B221M, [ASTM B211] Alloy 6061-T6 or 6005-T5.

(b) Reinforced plastic steps Steel reinforcing bar with injection molded plastic coating copolymer polypropylene. Polypropylene shall conform to ASTM D 4101.

712.23 Flashing Lights Flashing Lights shall be power operated or battery operated as specified.

(a) Power operated flashing lights shall consist of housing, adapters, lamps, sockets, reflectors, lens, hoods and other necessary equipment designed to give clearly visible

signal indications within an angle of at least 45 degrees and from 3 to 90 m [10 to 300 ft] under all light and atmospheric conditions.

Two circuit flasher controllers with a two-circuit filter capable of providing alternate flashing operations at the rate of not less than 50 nor more than 60 flashes per minute shall be provided.

The lamps shall be 650 lumens, 120 volt traffic signal lamps with sockets constructed to properly focus and hold the lamp firmly in position.
The housing shall have a rotatable sun visor not less than 175 mm [7 in] in length designed to shield the lens.

Reflectors shall be of such design that light from a properly focused lamp will reflect the light rays parallel. Reflectors shall have a maximum diameter at the point of contact with the lens of approximately 200 mm [8 in].

The lens shall consist of a round one-piece convex amber material which, when mounted, shall have a visible diameter of approximately 200 mm [8 in]. They shall distribute light and not diffuse it. The distribution of the light shall be asymmetrical in a downward direction. The light distribution of the lens shall not be uniform, but shall consist of a small high intensity portion with narrow distribution for long distance throw and a larger low intensity portion with wide distribution for short distance throw. Lenses shall be marked to indicate the top and bottom of the lens.

(b) Battery operated flashing lights shall be self- illuminated by an electric lamp behind the lens. These lights shall also be externally illuminated by reflex-reflective elements built into the lens to enable it to be seen by reflex-reflection of the light from the headlights of oncoming traffic. The batteries must be entirely enclosed in a case. A locking device must secure the case. The light shall have a flash rate of not less than 50 nor more than 60 flashes per minute from minus 30 °C [minus 20 °F] to plus 65 °C [plus 150 °F]. The light shall have an on time of not less than 10 percent of the flash cycle. The light beam projected upon a surface perpendicular to the axis of the light beam shall produce a lighted rectangular projection whose minimum horizontal dimension shall be 5 degrees each side of the horizontal axis. The effective intensity shall not have an initial value greater than 15.0 candelas or drop below 4.0 candelas during the first 336 hours of continuous flashing. The illuminated lens shall appear to be uniformly bright over its entire illuminated surface when viewed from any point within an angle of 9 degrees each side of the vertical axis and 5 degrees each side of the horizontal axis. The lens shall not be less than 175 mm [7 in] in diameter including a reflex-reflector ring of 13 mm [½ in] minimum width around the periphery. The lens shall be yellow in color and have a minimum relative luminous transmittance of 0.440 with a luminance of 2854° Kelvin. The lens shall be one-piece construction. The lens material shall be plastic and meet the luminous transmission requirements of this specification. The case containing the batteries and circuitry shall be constructed of a material capable of withstanding abuse equal to or greater than 1.21 mm thick steel [No. 18 U.S. Standard Gage Steel]. The housing and the lens frame, if of metal shall be properly cleaned, degreased and pretreated to promote adhesion. It shall be given one or more coats of enamel which, when dry shall completely obscure the metal. The enamel coating shall be of such quality

that when the coated case is struck a light blow with a sharp tool, the paint will not chip or crack and if scratched with a knife will not powder. The case shall be so constructed and closed as to exclude moisture that would affect the proper operation of light. The case shall have a weep hole to allow the escape of moisture from condensation. Photoelectric controls, if provided, shall keep the light operating whenever the ambient light falls below 215 lx [20 foot candles]. Each light shall be plainly marked as to the manufacturer's name and model number.

If required by the Resident, certification as to conformance to these specifications shall be furnished based on results of tests made by an independent testing laboratory. All lights are subject to random inspection and testing. All necessary random samples shall be provided to the Resident upon request without cost to the Department. All such samples shall be returned to the Contractor upon completion of the tests.

712.32 Copper Tubing Copper tubing and fittings shall conform to the requirements of ASTM B88M Type A [ASTM B88, Type K] or better.

712.33 Non-metallic Pipe, Flexible Non-metallic pipe and pipe fittings shall be acceptable flexible pipe manufactured from virgin polyethylene polymer suitable for transmitting liquids intended for human or animal consumption.

712.34 Non-metallic Pipe, Rigid Non-metallic pipe shall be Schedule 40 polyvinylchloride (PVC) that meets the requirement of ASTM D1785. Fittings shall be of the same material.

712.341 Metallic Pipe Metallic pipe shall be ANSI, Standard B36.10, Schedule 40 steel pipe conforming to the requirements of ASTM A53 Types E or S, Grade B. End plates shall be steel conforming to ASTM A36/A36M.

Both the sleeve and end plates shall be hot dip galvanized. Pipe sleeve splices shall be welded splices with full penetration weld before galvanizing.

712.35 Epoxy Resin Epoxy resin for grouting or sealing shall consist of a mineral filled thixotropic, flexible epoxy resin having a pot life of approximately one hour at 10°C [50°F]. The grout shall be an approved product suitable for cementing steel dowels into the preformed holes of curb inlets and adjacent curbing. The sealant shall be an approved product, light gray in color and suitable for coating the surface.

712.36 Bituminous Curb The asphalt cement for bituminous curb shall be of the grade required for the wearing course, or shall be Viscosity Grade AC-20 meeting the current requirements of Subsection 702.01 Asphalt Cement. The aggregate shall conform to the requirements of Subsection 703.07. The coarse aggregate portion retained on the 2.36 mm [No. 8] sieve may be either crushed rock or crushed gravel.

The mineral constituents of the bituminous mixture shall be sized and graded and combined in a composite blend that will produce a stable durable curbing with an acceptable texture.

Bituminous material for curb shall meet the requirements of Section 403 - Hot Bituminous Pavement.

712.37 Precast Concrete Slab Portland cement concrete for precast slabs shall meet the requirements of Section 502 - Structural Concrete, Class A.

The slabs shall be precast to the dimension shown on the plans and cross section and in accordance with the Standard Detail plans for Concrete Sidewalk Slab. The surface shall be finished with a float finish in accordance with Subsection 502.14(c). Lift devices of sufficient strength to hold the slab while suspended from cables shall be cast into the top or back of the slab.

712.38 Stone Slab Stone slabs shall be of granite from an acceptable source, hard, durable, predominantly gray in color, free from seams which impair the structural integrity and be of smooth splitting character. Natural color variations characteristic of the deposit will be permitted. Exposed surfaces shall be free from drill holes or indications of drill holes. The granite slabs in any one section of backslope must be all the same finish.

The granite slabs shall be scabble dressed or sawed to an approximately true plane having no projections or depressions over 13 mm [½ in] under a 600 mm [2 ft] straightedge or over 25 mm [1 in] under a 1200 mm [4 ft] straightedge. The arris at the intersection of the top surface and exposed front face shall be pitched so that the arris line is uniform throughout the length of the installed slabs. The sides shall be square to the exposed face unless the slabs are to be set on a radius or other special condition which requires that the joints be cut to fit, but in any case shall be so finished that when the stones are placed side by side no space more than 20 mm [3/4 in] shall show in the joint for the full exposed height.

Liftpin holes in all sides will be allowed except on the exposed face.

SECTION 717
ROADSIDE IMPROVEMENT MATERIAL

717.03 C. Method #3 - Roadside Mixture #3 Change the seed proportions to the following:

Crown Vetch	25%
Perennial Lupine	25%
Red Clover	12.5%
Annual Rye	37.5%

717.05 Mulch Binder Change the third sentence to read as follows:

"Paper fiber mulch may be used as a binder at the rate of 2.3 kg/unit [5 lb/unit]."

SECTION 720
STRUCTURAL SUPPORTS FOR HIGHWAY SIGNS, LUMINAIRES, AND TRAFFIC SIGNALS

720.08 U-Channel Posts Change the first sentence from "…, U-Channel posts…" to "…, Rib Back U-Channel posts…"

SECTION 722
GEOTEXTILES

722.01 Stabilization/Reinforcement Geotextile Add the following to note #3; "The strengths specified in the columns labeled"<50%" and "≥ 50%" refer to the elongation at which the geotextile material was tested. For example; if a fabric is tested at 15% elongation then it must meet or exceed the minimum strength shown in the "<50%" column. Submittals must include the percent elongation at which the material was tested."

722.02 Drainage Geotextile Add the following to note #3; "The strengths specified in the columns labeled"<50%" and "≥ 50%" refer to the elongation at which the geotextile material was tested. For example; if a fabric is tested at 15% elongation then it must meet or exceed the minimum strength shown in the "<50%" column. Submittals must include the percent elongation at which the material was tested."

722.01 Erosion Control Geotextile Add the following note to Elongation in the Mechanical Property Table; "The strengths specified in the columns labeled"<50%" and "≥ 50%" refer to the elongation at which the geotextile material was tested. For example; if a fabric is tested at 15% elongation then it must meet or exceed the minimum strength shown in the "<50%" column. Submittals must include the percent elongation at which the material was tested."

APPENDIX A TO DIVISION 100

SECTION 1 - BIDDING PROVISIONS

A. Federally Required Certifications By signing and delivering a Bid, the Bidder certifies as provided in all certifications set forth in this Appendix A - Federal Contract Provisions Supplement including:

- Certification Regarding No Kickbacks to Procure Contract as provided on this page 1 below.
- Certification Regarding Non-collusion as provided on page 1 below.
- Certification Regarding Non-segregated Facilities as provided by FHWA Form 1273, section III set forth on page 21 below.
- "Certification Regarding Debarment, Suspension, Ineligibility and Voluntary Exclusion" as provided by FHWA Form 1273, section XI set forth on page 32 below.
- "Certification Regarding Use of Contract Funds for Lobbying" as provided by FHWA Form 1273, section XII set forth on page 35 below.

Unless otherwise provided below, the term "Bidder", for the purposes of these certifications, includes the Bidder, its principals, and the person(s) signing the Bid. Upon execution of the Contract, the Bidder (then called the Contractor) will again make all the certifications indicated in this paragraph above. Upon execution of the Contract, the Bidder (then called the Contractor) will again make all the certifications indicated in this paragraph above.

CERTIFICATION REGARDING NO KICKBACKS TO PROCURE CONTRACT Except expressly stated by the Bidder on sheets submitted with the Bid (if any), the Bidder hereby certifies, to the best of its knowledge and belief, that it has not:

(A) employed or retained for a commission, percentage, brokerage, contingent fee, or other consideration, any firm or person (other then a bona fide employee working solely for me) to solicit or secure this contract;

(B) agreed, as an express or implied condition for obtaining this contract, to employ or retain the services of any firm or person in connection with carrying out the contract, or;

C) paid, or agreed to pay, to any firm, organization, or person (other than a bona fide employee working solely for me) any fee, contribution, donation, or consideration of any kind for, or in connection with, procuring or carrying out the contract;

By signing and submitting a Bid, the Bidder acknowledges that this certification is to be furnished to the Maine Department of Transportation and the Federal Highway Administration, U.S. Department of Transportation in connection with this contract in anticipation of federal aid highway funds and is subject to applicable state and federal laws, both criminal and civil.

CERTIFICATION REGARDING NONCOLLUSION Under penalty of perjury as provided by federal law (28 U.S.C. §1746), the Bidder hereby certifies, to the best of its knowledge and belief, that:

the Bidder has not, either directly or indirectly, entered into any agreement, participated in any collusion, or otherwise taken any action in restraint of competitive bidding in connection with the Contract.

For a related provisions, see Section 102.7.2 (C) of the Standard Specifications - "Effects of Signing and Delivery of Bids" - "Certifications", Section 3 of this Appendix A entitled "Other Federal Requirements" including section XI - "Certification Regarding Debarment, Suspension, Ineligibility, and Voluntary Exclusion" and section XII. - "Certification Regarding Use of Contract Funds for Lobbying."

****

B. Bid Rigging Hotline To report bid rigging activities call: **1-800-424-9071**

The U.S. Department of Transportation (DOT) operates the above toll-free "hotline" Monday through Friday, 8:00 a.m. to 5:00 p.m., eastern time. Anyone with knowledge of possible bid rigging, bidder collusion, or other fraudulent activities should use the "hotline" to report such activities.

The "hotline" is part of the DOT's continuing effort to identify and investigate highway construction contract fraud and abuse and is operated under the direction of the DOT Inspector General. All information will be treated confidentially and caller anonymity will be respected.

****

SECTION 2 - FEDERAL EEO AND CIVIL RIGHTS REQUIREMENTS

Unless expressly otherwise provided in the Bid Documents, the provisions contained in this Section 2 of this "Federal Contract Provisions Supplement" are hereby incorporated into the Bid Documents and Contract.

A. Nondiscrimination & Civil Rights - Title VI The Contractor and its subcontractors shall not discriminate on the basis of race, color, national origin, or sex in the performance of this Contract. The Contractor shall carry out applicable requirements of 49 CFR Part 26 in the award and administration of DOT assisted contracts. Failure by the Contractor to carry out these requirements is a material breach of this contract, which may result in the termination of this contract or such other remedy as the Department deems appropriate. The Contractor and subcontractors shall comply with Title VI of the Civil Rights Act of 1964, as amended, and with all State of Maine and other Federal Civil Rights laws.

For related provisions, see Subsection B - "Nondiscrimination and Affirmative Action - Executive Order 11246" of this Section 2 and Section 3 - Other Federal Requirements of this "Federal Contract Provisions Supplement" including section II - "Nondiscrimination" of the "Required Contract Provisions, Federal Aid Construction Contracts", FHWA-1273.

B. Nondiscrimination and Affirmative Action - Executive Order 11246 Pursuant to Executive Order 11246, which was issued by President Johnson in 1965 and amended in 1967 and 1978, this Contract provides as follows.

The Contractor shall take specific affirmative actions to ensure equal employment opportunity. The evaluation of the Contractor's compliance with these specifications shall be based upon its efforts to achieve maximum results from its actions. The Contractor shall

document these efforts fully, and shall implement affirmative action steps at least as extensive as the following:

1. Ensure and maintain a working environment free of harassment, intimidations, and coercion at all sites, and in all facilities at which the Contractor's employees are assigned to work. The Contractor, where possible, will assign two or more women to each construction project. The Contractor shall specifically ensure that all forepersons, superintendents, and other on-site supervisory personnel are aware of and carry out the Contractor's obligation to maintain such a working environment, with specific attention to minority or female individuals working at such sites or in such facilities.

2. Establish and maintain a current list of minority and female recruitment sources, provide written notification to minority and female recruitment sources and to community organizations when the Contractor or its union have employment opportunities available, and to maintain a record of the organization's responses.

3. Maintain a current file of the names, addresses and telephone numbers of each minority and female off-the-street applicant and minority or female referral from a union, a recruitment source or community organization and of what action was taken with respect to each such individual. If such individual was sent to the union hiring hall for referral and was not referred back to the Contractor by the union or, if referred, not employed by the Contractor, this shall be documented in the file with the reason therefore, along with whatever additional actions the Contractor may have taken.

4. Provide immediate written notification to the Department's Civil Rights Office when the union or unions with which the Contractor has a collective bargaining agreement has not referred to the Contractor a minority person or woman sent by the Contractor, or when the Contractor has other information that the union referral process has impeded the Design-Builder's efforts to meet its obligations.

5. Develop on-the-job training opportunities and/or participate in training programs for the area which expressly include minorities and women, including upgrading programs and apprenticeship and trainee programs relevant to the Contractor's employment needs, especially those programs funded or approved by the Department of Labor. The Contractor shall provide notice of these programs to the sources compiled under B above.

6. Disseminate the Contractor's EEO policy by providing notice of the policy to unions and training programs and requesting their cooperation in assisting the Contractor in meeting its EEO obligation; by including it in any policy manual and collective bargaining agreement; by publicizing it in the company newspaper, annual report, etc.; by specific review of the policy with all management personnel and with all minority and female employees at least once a year; and by posting the company EEO policy on bulletin boards accessible to all employees at each location where construction work is performed.

7. Review, at least annually, the company's EEO policy and affirmative action obligations under these specifications with all employees having any responsibility for hiring, assignment, layoff, termination, or other employment decisions including specific review

of these items with on-site supervisory personnel such as Superintendents, General Forepersons, etc., prior to the initiation of construction work at any job site. A written record shall be made and maintained identifying the time and place of these meetings, persons attending, subject matter discussed, and disposition of the subject matter.

8. Disseminate the Contractor's EEO policy externally by including it in any advertising in the news media, specifically including minority and female news media, and providing written notification to and discussing the Contractor's EEO policy with other Contractor's and Subcontractors with whom the Contractor does or anticipates doing business.

9. Direct its recruitment efforts, both orally and written to minority, female and community organizations, to schools with minority and female students and to minority and female recruitment and training organizations serving the Contractor's recruitment area and employment needs. Not later that one month prior to the date for the acceptance of applications for apprenticeship or other training by any recruitment source, the Contractor shall send written notification to organizations such as the above describing the openings, screenings, procedures, and test to be used in the selection process.

10. Encourage present minority and female employees to recruit other minority persons and women and, where reasonable, provide after school, summer and vacation employment to minority and female youth, both on the site and in other areas of a Contractor's workforce.

11. Validate all tests and other selection requirements.

12. Conduct, at least annually, an inventory and evaluation at least of all minority and female personnel for promotional opportunities and encourage these employees to seek or to prepare for, through appropriate training, etc., such opportunities.

13. Ensure that seniority practices, job classifications, work assignments and other personnel practices, do not have a discriminatory effect by continually monitoring all personnel and employment related activities to ensure that the EEO policy and the Contractor's obligations under these specifications are being carried out.

14. Ensure that all facilities and company activities are non segregated except that separate or single-user toilet and necessary changing facilities shall be provided to assure privacy between the sexes.

15. Document and maintain a record of all solicitations of offers for subcontracts from minority and female construction Contractor's and suppliers, including circulation of solicitations to minority and female Contractor associations and other business associations.

16. Conduct a review, at least annually, of all supervisors' adherence to and performance under the Contractor's EEO policies and affirmative action obligations.

C. Goals for Employment of Women and Minorities Per Executive Order 11246, craft tradesperson goals are 6.9% women and .5% minorities employed. However, goals may be adjusted upward at the mutual agreement of the Contractor and the Department. Calculation of these percentages shall not include On-the-Job Training Program trainees, and shall not include clerical or field clerk position employees.

For a more complete presentation of requirements for such Goals, see the federally required document "Goals for Employment of Females and Minorities" set forth in the next 6 pages below.

****

Start of GOALS FOR EMPLOYMENT OF FEMALES AND MINORITIES
Federally Required Contract Document

§60-4.2 Solicitations

(d) The following notice shall be included in, and shall be part of, all solicitations for offers and bids on all Federal and federally assisted construction contracts or subcontracts in excess of $10,000 to be performed in geographical areas designated by the Director pursuant to §60-4.6 of this part (see 41 CFR 60-4.2(a)):

Notice of Requirement for Affirmative Action to Ensure Equal Opportunity (Executive Order 11246)

1. The Offeror's or bidder's attention is called to the "Equal Opportunity Clause" and the "Standard Federal Equal Employment Specifications" set forth herein.

2. The goals and timetables for minority and female participation, expressed in percentage terms for the Contractor's aggregate work force in each trade on all construction work in the covered area, are as follows:

Goals for female participation in each trade 6.9%

Goals for minority participation for each trade
Maine
001 Bangor, ME 0.8%
Non-SMSA Counties (Aroostook, Hancock, Penobscot, Piscataquis, Waldo, Washington)

002 Portland-Lewiston, ME
SMSA Counties: 4243 Lewiston-Auburn, ME 0.5%
(Androscoggin)

6403 Portland, ME 0.6%
(Cumberland, Sagadahoc)

Non-SMSA Counties: 0.5%
(Franklin, Kennebec, Knox, Lincoln, Oxford, Somerset, York)

These goals are applicable to all the Contractor's construction work (whether or not it is Federal or federally assisted) performed in the covered area. If the contractor performs construction work in a geographical area located outside of the covered area, it shall apply the goals established for such geographical area where the work is actually performed. With regard to this second area, the contractor also is subject to the goals for both its federally involved and non federally involved construction.

The contractor's compliance with the Executive Order and the regulations in 41 CFR Part 60-4 shall be based on its implementation of the Equal Opportunity Clause, specific affirmative action obligations required by the specifications set forth in 41 CFR 60-4.3(a), and its efforts to meet the goals. The hours of minority and female employment and training must be substantially uniform throughout the length of the contract, and in each trade, and the contractor shall make a good faith effort to employ minorities and women evenly on each of its projects. The transfer of minority or female employees or trainees from Contractor to Contractor or from project to project for the sole purpose of meeting the Contractor's goals shall be in violation of the contract, the Executive Order and the regulations in 41 CFR Part 60-4. Compliance with the goals will be measured against the total work hours performed.

3. The Contractor shall provide written notification to the Director of the Office of Federal Contract Compliance Programs within 10 working days of award of any construction subcontract in excess of $10,000 at any tier for construction work under the contract resulting from this solicitation. The notification shall list the name, address and telephone number of the subcontractor, employer identification number of the subcontractor, estimated dollar amount of the subcontract; estimated started and completion dates of the subcontract; and the geographical area in which the subcontract is to be performed.

4. As used in this Notice, and in the Contract resulting from this solicitation, the "covered area" is (insert description of the geographical areas where the contract is to be performed giving the state, county and city, if any).

STANDARD FEDERAL EQUAL EMPLOYMENT OPPORTUNITY CONSTRUCTION CONTRACT SPECIFICATIONS (EXECUTIVE ORDER 11246)

1. As used in these specifications:

   a. "Covered area" means the geographical area described in the solicitation from which this contract resulted;

   b. "Director" means Director, Office of Federal Contract Compliance Programs, United States Department of Labor, or any person to whom the Director delegates authority;

   c. "Employer identification number" means the Federal Social Security number used on the Employer's Quarterly Federal Tax Return, U.S. Treasury Department form 941;

   d. "Minority" includes:
      (i) Black (all persons having origins in any of the Black African racial groups not of Hispanic origin);

(ii) Hispanic (all persons of Mexican, Puerto Rican, Cuban, Central or South American or other Spanish Culture or origin, regardless of race);
(iii) Asian and Pacific Islander (all persons having origins in any of the original peoples of the Far East, Southeast Asia, the Indian Subcontinent, or the Pacific Islands); and
(iv) American Indian or Alaskan Native (all persons having origins in any of the original peoples of the North America and maintaining identifiable tribal affiliations through membership and participation or community identification).

2. Whenever the Contractor, or any subcontractor at any tier, subcontracts a portion of the work involving any construction trade, it shall physically include in each subcontract in excess of $10,000 the provisions of these specifications and the Notice which contains the applicable goals for minority and female participation and which is set forth in the solicitations from which this contract resulted.

3. If the contractor, is participating (pursuant to 41 CFR 60-4.5) in a Hometown Plan approved by the U.S. Department of Labor in the covered area either individually or through an association, its affirmative action obligations on all work in the Plan area (including goals and timetables) shall be in accordance with that Plan for those trades which have unions participating in the Plan. Contractors must be able to demonstrate their participation in and compliance with the provisions of any such Hometown Plan. Each Contractor or Subcontractor participating in an approved Plan is individually required to comply with its obligations under the EEO clause, and to make a good faith effort to achieve each goal under the Plan in each trade in which it has employees. The overall good faith performance by other Contractors for Subcontractors toward a goal in an approved Plan does not excuse any covered Contractor's or Subcontractor's failure to take good faith efforts to achieve the Plan goals and timetables.

4. The Contractor shall implement the specific affirmative action standards provided in paragraphs 7 a. through p. of these specifications. The goals set forth in the solicitation from which this contract resulted are expressed as percentages of the total hours of employment and training of minority and female utilization the Contractor should reasonably be able to achieve in each construction trade in which it has employees in contractors performing construction work in geographical areas where they do not have a Federal or federally assisted construction contract shall apply the minority and female goals established for the geographical areas where the work is being performed. Goals are published periodically in the Federal Register in notice form and such notices may be obtained from any Office of Federal Contract Compliance Programs office or from Federal procurement contracting officers. The Contractor is expected to make substantially uniform progress in meeting its goals in each craft during the period specific.

5. Neither the provisions of any collective bargaining agreement, nor the failure by a union with whom the Contractor has a collective bargaining agreement, to refer either minorities or women shall excuse the Contractor's obligations under these specifications, Executive Order 11246, or the regulations promulgated pursuant, thereto.

6. In order for the non working training hours of apprentices and trainees to be counted in meeting the goals, such apprentices and trainees must be employed by the Contractor during the training period, and the Contractor must have made a commitment to employ the

apprentices and trainees at the completion of their training, subject to the availability of employment opportunities. Trainees must be trained pursuant to training programs approved by the U.S. Department of Labor.

7. The Contractor shall take specific affirmative actions to ensure equal employment opportunity. The evaluation of the Contractor's compliance with these specifications shall be based upon its effort to achieve maximum results from its actions. The Contractor shall document these efforts fully, and shall implement affirmative action steps at least as expensive as the following:

   a. Ensure and maintain a working environment free of harassment, intimidation, coercion at all sites, and in all facilities at which the Contractor's employees are assigned to work. The Contractor, when possible, will assign two or more women to each construction project. The Contractor shall specifically ensure that all foremen, superintendents, and other on-site supervisory personnel are aware of and carry out the Contractor's obligation to maintain such a working environment, with specific attention to minority or female individuals working at such sites or in such facilities.

   b. Establish and maintain a current list of minority and female recruitment sources provide written notification to minority and female recruitment sources and to community organizations when the Contractor or its unions have employment opportunities available, and maintain a record of the organization's responses.

   c. Maintain a current file of the names, addresses and telephone numbers of each minority and female off-the-street applicant and minority or female referral from a union, a recruitment sources or community organization and of what action was taken with respect to each such individual. If such individual was sent to the union hiring hall for referral and was not referred back to the Contractor by the union or, if referred, not employed by the Contractor, this shall be documented in the file with the reason therefore, along with whatever additional actions the Contractor may have taken.

   d. Provide immediate written notification to the Director when the union or unions with which the Contractor has a collective bargaining agreement has not referred to the Contractor a minority person or woman sent by the Contractor, or when the Contractor has other information that the union referral process has impeded the Contractor's efforts to meet its obligations.

   e. Develop on-the-job training opportunities and/or participate in training programs for the area which expressly include minorities and women, including upgrading programs and apprenticeship and trainee programs relevant to the Contractor's employment needs, especially those programs funded or approved by the Department of Labor. The Contractor shall provide notice of these programs to the sources complied under 7b above.

   f. Disseminate the Contractor's EEO policy by providing notice of the policy to unions and training programs and requesting their cooperation in assisting the Contractor in meeting its EEO obligations; by including in any policy manual and collective bargaining agreement; by publicizing it in the company newspaper, annual report, etc.; by specific

review of the policy with all management personnel and with all minority and female employees at least once a year; and by posting the company EEO policy on bulletin boards accessible to all employees at each location where construction work is performed.

g. Review, at least annually, the company's EEO policy and affirmative action obligations under these specifications with all employees having any responsibility for hiring, assignment, layoff, termination or other employment decisions including specific review of these items with on-site supervisory personnel such as Superintendents, General Foremen, etc., prior to the initiation of construction work at any job site. A written record shall be made and maintained identifying the time and place of these meetings, persons attending, subject matter discussed, and disposition of the subject matter.

h. Disseminate the Contractor's EEO policy externally by including it in any advertising in the news media, specifically including minority and female news media, and providing written notification to and discussing the Contractor's EEO policy with other Contractors and Subcontractors with whom the Contractor does or anticipates doing business.

i. Direct its recruitment, efforts, both oral and written, to minority, female and community organizations, to schools with minority and female students and to minority and female recruitment and training organizations serving the Contractor's recruitment area and employment needs. Not later than one month other training by any recruitment source, the Contractor shall send written notification to organizations such as the above, describing prior to the date for the acceptance of applications for apprenticeship or the openings, screening procedures, and tests to be used in the selection process.

j. Encourage present minority and female employees to recruit other minority persons and women and, where reasonable, provide after school, summer and vacation employment to minority and female youth both on site and in other areas of a Contractor's work force.

k. Validate all tests and other selection requirements where there is an obligation to do so under 41 CFR Part 60-3.

l. Conduct, at least annually, an inventory and evaluation at least of all minority and female personnel for promotional opportunities and encourage these employees to seek or to prepare for, through appropriate training, etc., such opportunities.

m. Ensure that seniority practices, job classifications, work assignments and other personnel practices, do not have a discriminatory effect by continually monitoring all personnel and employment related activities to ensure that the EEO policy and the Contractor's obligations under these specifications are being carried out.

n. Ensure that all facilities and company activities are non segregated except that separate or single-user toilet and necessary changing facilities shall be provided to assure privacy between the sexes.

o. Document and maintain a record of all solicitations of offers for subcontracts from minority and female construction contractors and suppliers, including circulation of

solicitation to minority and female contractor associations and other business associations.

p. Conduct a review, at least annually, of all supervisor's adherence to and performance under the Contractor's EEO policies and affirmative action obligations.

8. Contractors are encouraged to participate in voluntary associations which assist in fulfilling one or more of their affirmative action obligations (7 a through p.). The efforts of a contractor association, joint contractor-union, contractor-community, or other similar group of which the contractor is a member and participant, may be asserted as fulfilling any one or more of its obligations under 7 a through p. of these specifications provided that the contractor actively participates in the group, makes every effort to assure that the group has a positive impact on the employment of minorities and women in the industry, ensures that the concrete benefits of the program and reflected in the Contractor's minority and female work force participation, makes a good faith effort to meet its individual goals and timetables, and can provide access to documentation which demonstrates the effectiveness of actions take on behalf of the Contractor. The obligation to comply, however, is the Contractor's and failure of such a group to fulfill an obligation shall not be a defense for the Contractor's noncompliance.

9. A single goal for minorities and a separate single goal for women have been established. The Contractor, however, is required to provide equal employment opportunity and to take affirmative action for all minority groups, both make and female, and all women, both minority and non-minority. Consequently, the Contractor may be in violation of the Executive Order if a particular group is employed in a substantially disparate manner (for example, specific minority group of women is underutilized.)

10. The Contractor shall not use the goals and timetables or affirmative action even through the Contractor has achieved its goals for women generally, the Contractor may be in violation of the Executive Order if standards to discriminate against any person because of race, color, religion, sex, or national origin.

11. The Contractor shall not enter into any Subcontract with any person or firm debarred from Government contracts pursuant to Executive Order 11246.

12. The Contractor shall carry out such sanctions and penalties for violation of these specifications and of the Equal Opportunity Clause, including suspension, termination and cancellation of existing subcontracts as may be imposed or ordered pursuant to Executive Order 11246, as amended, and its implementation regulations by the Office of Federal Contract Compliance Programs. Any Contractor who fails to carry out such sanctions and penalties shall be in violation of these specifications and Executive Order 11246, as amended.

13. The Contractor, in fulfilling its obligations under these specifications, shall implement specific affirmative action steps, at least as extensive as those standards prescribed in paragraph 7 of these specifications, so as to achieve maximum results from its efforts to ensure equal employment opportunity. If the Contractor fails to comply with the

requirements of the Executive Order, the implementing regulations, or these specifications, the Director shall proceed in accordance with 41 CFR 60-4.6.

14. The Contractor shall designate a responsible official to monitor all employment related activity to ensure that the company EEO policy is being carried out, to submit reports relating to the provisions hereof as may be required by the Government and to keep records. Records shall at least include for each employee the name, address, telephone numbers, construction trade, union affiliation if any, employee identification number when assigned, social security number, race, sex, status (e.g. mechanic, apprentice, trainee, helper, or laborer), dates of changes in status, hours worked per week in the indicated trade, rate of pay, and location sat which the work was performed. Records be maintained in an easily understandable and retrievable form; however, to the degree that existing records satisfy this requirement, contractors shall not be required to maintain separate records.

15. Nothing herein provided shall be construed as a limitation upon the application of other laws which establish different standards of compliance or upon the application of requirements for the hiring of local or other area residents (e.g., those under the Public Works Employment Act of 1977 and the Community Development Block Grant Program).

End of GOALS FOR EMPLOYMENT OF FEMALES AND MINORITIES
Federally Required Contract Document

****

D. Disadvantaged Business Enterprise (DBE) Requirements The Department has established an annual Disadvantaged Business Enterprise goal to be achieved through race neutral means. This goal will adjusted periodically and will be provided by Supplemental Provision. The Contractor shall comply with all provisions of this section regarding DBE participation and the Department's latest version of the Disadvantaged Business Enterprise Program Manual, said Manual being incorporated herein by reference. In the case of conflict between this Contract and said Manual, this Contract shall control. The Department reserves the right to adjust DBE goals on a project-by-project basis by addendum.

Policy. It is the Department's policy that DBEs as defined in 23 CFR Part 26 and referenced in the Transportation Equity Act for 21st Century of 1998, as amended from the Surface Transportation Uniform Relocation Assistance Act of 1987, and the Intermeddle Surface Transportation Efficiency Act of 1991. The intent hereto remains to provide the maximum opportunity for DBEs to participate in the performance of contracts financed in whole or in part with federal funds.

The Department and its Contractors shall not discriminate on the basis of race, color, national origin, ancestry, sex, age, or disability in the award and performance of DOT assisted contracts.

Disadvantaged Business Enterprises are those so certified by the Maine Department of Transportation Civil Rights Office prior to bid opening date.

The Department has determined that elements of a good faith effort to meet the contract goal include but are not limited to the following:

1. Whether the Contractor advertised in general circulation, trade association, and minority/women's-focus media concerning the subcontracting opportunities;

2. Whether the Contractor provided written notice to a reasonable number of specific DBEs that their interest in the contract is being solicited;

3. Whether the Contractor followed up on initial solicitations of interest by contacting DBEs to determine with certainty whether the DBEs were interested;

4. Whether the Contractor selected portions of the work to be performed by DBEs in order to increase the likelihood of meeting the DBE goals;

5. Whether the Contractor provided interested DBEs with adequate information about the plans, specification and requirements of the contract;

6. Whether the Contractor negotiated in good faith with interested DBEs, not rejecting the DBE as unqualified without sound reasons based on a thorough investigation of their capabilities;

7. Whether the Contractor made efforts to assist interested DBEs with other appropriate technical/financial assistance required by the Department or Contractor;

8. Whether the Contractor effectively used the services of available minority/women's community organizations, minority/women's business assistance offices; and other organizations that provide assistance in the recruitment and placement of DBEs.

Substitutions of DBEs. The following may be acceptable reasons for Civil Rights Office approval of such a change order:

- The DBE defaults, voluntarily removes itself or is over-extended;
- The Department deletes portions of the work to by performed by the DBE.

It is not intended that the ability to negotiate a more advantageous contract with another certified DBE be considered a valid basis for such a change in DBE utilization once the DBE Bid Submission review has been passed. Any requests to alter the DBE commitment must be in writing and included with the change order.

Failure to carry out terms of this Standard Specification shall be treated as a violation of this contract and will result in contract sanctions which may include withholding of partial payments totaling the creditable dollars amount which would have been paid for said DBE participation, termination of this contract or other measures which may affect the ability of the Contractor to obtain Department contracts.

Copies of the Maine Department of Transportation's DBE Program may be obtained from:

Maine Department of Transportation
Civil Rights Office
#16 State House Station
Augusta, Maine 04333-0016
tel. (207) 624-3519

Quarterly Reporting Requirement. The Contractor must submit Semi-annual reports of actual dollars paid to Disadvantaged Business Enterprises (DBE's) on this Project to the MDOT Civil Rights Office by the end of the third week of April and October for the period covering the preceding six months considered Federal Fiscal Year periods. The reports will be submitted directly to the Civil Rights Office on the form provided in the latest version of the DBE Program Manual. Failure to submit the report by the deadline may result in a withholding of approval of partial payment estimates by the Department.

SECTION 3 - OTHER FEDERAL REQUIREMENTS

Unless expressly otherwise provided in the Bid Documents, the provisions contained in this Section 3 of this "Federal Contract Provisions Supplement" are hereby incorporated into the Bid Documents and Contract.

A. Buy America

If the cost of products purchased for permanent use in this project which are manufactured of steel, iron or the application of any coating to products of these materials exceeds 0.1 percent of the contract amount, or $2,500.00, whichever is greater, the products shall have been manufactured and the coating applied in the United States. The coating materials are not subject to this clause, only the application of the coating. In computing that amount, only the cost of the product and coating application cost will be included.

Ore, for the manufacture of steel or iron, may be from outside the United States; however, all other manufacturing processes of steel or iron must be in the United States to qualify as having been manufactured in the United States.

United States includes the 50 United States and any place subject to the jurisdiction thereof.

Products of steel include, but are not limited to, such products as structural steel, piles, guardrail, steel culverts, reinforcing steel, structural plate and steel supports for signs, luminaries and signals.

Products of iron include, but are not limited to, such products as cast iron grates.

Application of coatings include, but are not limited to, such applications as epoxy, galvanized and paint.

To assure compliance with this section, the Contractor shall submit a certification letter on its letterhead to the Department stating the following:

> "This is to certify that products made of steel, iron or the application of any coating to products of these materials whose costs are in excess of $2,500.00 or 0.1 percent of the original contract amount, whichever is greater, were manufactured and the coating, if one was required, was applied in the United States."

B. Materials

a. Convict Produced Materials References: 23 U.S.C. 114(b)(2), 23 CFR 635.417

Applicability: FHWA's prohibition against the use of convict material only applies to Federal-aid highways. Materials produced after July 1, 1991, by convict labor may only be incorporated in a Federal-aid highway construction project if: 1) such materials have been produced by convicts who are on parole, supervised release, or probation from a prison; or 2) such material has been produced in a qualified prison facility, e.g., prison industry, with the amount produced during any 12-month period, for use in Federal-aid projects, not exceeding the amount produced, for such use, during the 12-month period ending July 1, 1987.

Materials obtained from prison facilities (e.g., prison industries) are subject to the same requirements for Federal-aid participation that are imposed upon materials acquired from other sources. Materials manufactured or produced by convict labor will be given no preferential treatment.

The preferred method of obtaining materials for a project is through normal contracting procedures which require the contractor to furnish all materials to be incorporated in the work. The contractor selects the source, public or private, from which the materials are to be obtained (23 CFR 635.407). Prison industries are prohibited from bidding on projects directly (23 CFR 635.112e), but may act as material supplier to construction contractors.

Prison materials may also be approved as State-furnished material. However, since public agencies may not bid in competition with private firms, direct acquisition of materials from a prison industry for use as State-furnished material is subject to a public interest finding with the Division Administrator's concurrence (23 CFR 635.407d). Selection of materials produced by convict labor as State-furnished materials for mandatory use should be cleared prior to the submittal of the Plans Specifications & Estimates (PS&E).

b. Patented/Proprietary Products References: 23 U.S.C. 112, 23 CFR 635.411

FHWA will not participate, directly or indirectly, in payment for any premium or royalty on any patented or proprietary material, specification, or process specifically set forth in the plans and specifications for a project, unless:

- the item is purchased or obtained through competitive bidding with equally suitable unpatented items,
- the STA certifies either that the proprietary or patented item is essential for synchronization with the existing highway facilities or that no equally suitable alternative exists, or
- the item is used for research or for a special type of construction on relatively short sections of road for experimental purposes. States should follow FHWA's procedures for "Construction Projects Incorporating Experimental Features" (expermnt.htm) for the submittal of work plans and evaluations.

The primary purpose of the policy is to have competition in selection of materials and allow for development of new materials and products. The policy further permits materials and products that are judged equal may be bid under generic specifications. If only patented or proprietary products are acceptable, they shall be bid as alternatives with all, or at least a

reasonable number of, acceptable materials or products listed; and the Division Administrator may approve a single source if it can be found that its utilization is in the public interest.

Trade names are generally the key to identifying patented or proprietary materials. Trade name examples include 3M, Corten, etc. Generally, products identified by their brand or trade name are not to be specified without an "or equal" phrase, and, if trade names are used, all, or at least a reasonable number of acceptable "equal" materials or products should be listed. The licensing of several suppliers to produce a product does not change the fact that it is a single product and should not be specified to the exclusion of other equally suitable products.

c. State Preference References: 23 U.S.C. 112, 23 CFR 635.409

Materials produced within Maine shall not be favored to the exclusion of comparable materials produced outside of Maine. State preference clauses give particular advantage to the designated source and thus restrict competition. Therefore, State preference provisions shall not be used on any Federal-aid construction projects.

This policy also applies to State preference actions against materials of foreign origin, except as otherwise permitted by Federal law. Thus, States cannot give preference to in-State material sources over foreign material sources. Under the Buy America provisions, the States are permitted to expand the Buy America restrictions provided that the STA is legally authorized under State law to impose more stringent requirements.

d. State Owned/Furnished/Designated Materials References: 23 U.S.C. 112, 23 CFR 635.407

Current FHWA policy requires that the contractor must furnish all materials to be incorporated in the work, and the contractor shall be permitted to select the sources from which the materials are to be obtained. Exceptions to this requirement may be made when there is a definite finding, by MDOT and concurred in by Federal Highway Administration's (FHWA) Division Administrator, that it is in the public interest to require the contractor to use materials furnished by the MDOT or from sources designated by MDOT. The exception policy can best be understood by separating State-furnished materials into the categories of manufactured materials and local natural materials.

Manufactured Materials When the use of State-furnished manufactured materials is approved based on a public interest finding, such use must be made mandatory. The optional use of State-furnished manufactured materials is in violation of our policy prohibiting public agencies from competing with private firms. Manufactured materials to be furnished by MDOT must be acquired through competitive bidding, unless there is a public interest finding for another method, and concurred in by FHWA's Division Administrator.

Local Natural Materials When MDOT owns or controls a local natural materials source such as a borrow pit or a stockpile of salvaged pavement material, etc., the materials may be designated for either optional or mandatory use; however, mandatory use will require a public interest finding (PIF) and FHWA's Division Administrator's concurrence.

In order to permit prospective bidders to properly prepare their bids, the location, cost, and any conditions to be met for obtaining materials that are made available to the contractor shall be stated in the bidding documents.

Mandatory Disposal Sites Normally, the disposal site for surplus excavated materials is to be of the contractor's choosing; although, an optional site(s) may be shown in the contract provisions. A mandatory site shall be specified when there is a finding by MDOT, with the concurrence of the Division Administrator, that such placement is the most economical or that the environment would be substantially enhanced without excessive cost. Discussion of the mandatory use of a disposal site in the environmental document may serve as the basis for the public interest finding.

Summarizing FHWA policy for the mandatory use of borrow or disposal sites:

- mandatory use of either requires a public interest finding and FHWA's Division Administrator's concurrence,
- mandatory use of either may be based on environmental consideration where the environment will be substantially enhanced without excessive additional cost, and
- where the use is based on environmental considerations, the discussion in the environmental document may be used as the basis for the public interest finding.

Factors to justify a public interest finding should include such items as cost effectiveness, system integrity, and local shortages of material.

C. Standard FHWA Contract Provisions - FHWA 1273

Unless expressly otherwise provided in the Bid Documents, the following "Required Contract Provisions, Federal Aid Construction Contracts", FHWA-1273, are hereby incorporated into the Bid Documents and Contract.

****

Start of FHWA 1273 REQUIRED CONTRACT PROVISIONS
FEDERAL-AID CONSTRUCTION CONTRACTS(As revised through March 10, 1994)

I. GENERAL

1. These contract provisions shall apply to all work performed on the contract by the contractor's own organization and with the assistance of workers under the contractor's immediate superintendence and to all work performed on the contract by piecework, station work, or by subcontract.

2. Except as otherwise provided for in each section, the contractor shall insert in each subcontract all of the stipulations contained in these Required Contract Provisions, and further require their inclusion in any lower tier subcontract or purchase order that may in turn be made. The Required Contract Provisions shall not be incorporated by reference in any case. The prime contractor shall be responsible for compliance by any subcontractor or lower tier subcontractor with these Required Contract Provisions.

3. A breach of any of the stipulations contained in these Required Contract Provisions shall be sufficient grounds for termination of the contract.

4. A breach of the following clauses of the Required Contract Provisions may also be grounds for debarment as provided in 29 CFR 5.12:

   Section I, paragraph 2;
   Section IV, paragraphs 1, 2, 3, 4, and 7;
   Section V, paragraphs 1 and 2a through 2g.

5. Disputes arising out of the labor standards provisions of Section IV (except paragraph 5) and Section V of these Required Contract Provisions shall not be subject to the general disputes clause of this contract. Such disputes shall be resolved in accordance with the procedures of the U.S. Department of Labor (DOL) as set forth in 29 CFR 5, 6, and 7. Disputes within the meaning of this clause include disputes between the contractor (or any of its subcontractors) and the contracting agency, the DOL, or the contractor's employees or their representatives.

6. Selection of Labor: During the performance of this contract, the contractor shall not:

   a. discriminate against labor from any other State, possession, or territory of the United States (except for employment preference for Appalachian contracts, when applicable, as specified in Attachment A), or

   b. employ convict labor for any purpose within the limits of the project unless it is labor performed by convicts who are on parole, supervised release, or probation.

II. NONDISCRIMINATION (Applicable to all Federal-aid construction contracts and to all related subcontracts of $10,000 or more.)

1. Equal Employment Opportunity: Equal employment opportunity (EEO) requirements not to discriminate and to take affirmative action to assure equal opportunity as set forth under laws, executive orders, rules, regulations (28 CFR 35, 29 CFR 1630 and 41 CFR 60) and orders of the Secretary of Labor as modified by the provisions prescribed herein, and imposed pursuant to 23 U.S.C. 140 shall constitute the EEO and specific affirmative action standards for the contractor's project activities under this contract. The Equal Opportunity Construction Contract Specifications set forth under 41 CFR 60-4.3 and the provisions of the American Disabilities Act of 1990 (42 U.S.C. 12101 et seq.) set forth under 28 CFR 35 and 29 CFR 1630 are incorporated by reference in this contract. In the execution of this contract, the contractor agrees to comply with the following minimum specific requirement activities of EEO:
   a. The contractor will work with the State highway agency (SHA) and the Federal Government in carrying out EEO obligations and in their review of his/her activities under the contract.

   b. The contractor will accept as his operating policy the following statement:
   "It is the policy of this Company to assure that applicants are employed, and that employees are treated during employment, without regard to their race, religion, sex, color, national origin, age or disability. Such action shall include: employment,

upgrading, demotion, or transfer; recruitment or recruitment advertising; layoff or termination; rates of pay or other forms of compensation; and selection for training, including apprenticeship, preapprenticeship, and/or on-the-job training."

2. EEO Officer. The contractor will designate and make known to the SHA contracting officers an EEO Officer who will have the responsibility for and must be capable of effectively administering and promoting an active contractor program of EEO and who must be assigned adequate authority and responsibility to do so.

3. Dissemination of Policy. All members of the contractor's staff who are authorized to hire, supervise, promote, and discharge employees, or who recommend such action, or who are substantially involved in such action, will be made fully cognizant of, and will implement, the contractor's EEO policy and contractual responsibilities to provide EEO in each grade and classification of employment. To ensure that the above agreement will be met, the following actions will be taken as a minimum:

   a. Periodic meetings of supervisory and personnel office employees will be conducted before the start of work and then not less often than once every six months, at which time the contractor's EEO policy and its implementation will be reviewed and explained. The meetings will be conducted by the EEO Officer.

   b. All new supervisory or personnel office employees will be given a thorough indoctrination by the EEO Officer, covering all major aspects of the contractor's EEO obligations within thirty days following their reporting for duty with the contractor.

   c. All personnel who are engaged in direct recruitment for the project will be instructed by the EEO Officer in the contractor's procedures for locating and hiring minority group employees.

   d. Notices and posters setting forth the contractor's EEO policy will be placed in areas readily accessible to employees, applicants for employment and potential employees.

   e. The contractor's EEO policy and the procedures to implement such policy will be brought to the attention of employees by means of meetings, employee handbooks, or other appropriate means.

4. Recruitment. When advertising for employees, the contractor will include in all advertisements for employees the notation: "An Equal Opportunity Employer." All such advertisements will be placed in publications having a large circulation among minority groups in the area from which the project work force would normally be derived.

   a. The contractor will, unless precluded by a valid bargaining agreement, conduct systematic and direct recruitment through public and private employee referral sources likely to yield qualified minority group applicants. To meet this requirement, the contractor will identify sources of potential minority group employees, and establish with such identified sources procedures whereby minority group applicants may be referred to the contractor for employment consideration.

b. In the event the contractor has a valid bargaining agreement providing for exclusive hiring hall referrals, he is expected to observe the provisions of that agreement to the extent that the system permits the contractor's compliance with EEO contract provisions. (The DOL has held that where implementation of such agreements have the effect of discriminating against minorities or women, or obligates the contractor to do the same, such implementation violates Executive Order 11246, as amended.)

c. The contractor will encourage his present employees to refer minority group applicants for employment. Information and procedures with regard to referring minority group applicants will be discussed with employees.

5. Personnel Actions. Wages, working conditions, and employee benefits shall be established and administered, and personnel actions of every type, including hiring, upgrading, promotion, transfer, demotion, layoff, and termination, shall be taken without regard to race, color, religion, sex, national origin, age or disability. The following procedures shall be followed:

a. The contractor will conduct periodic inspections of project sites to insure that working conditions and employee facilities do not indicate discriminatory treatment of project site personnel.

b. The contractor will periodically evaluate the spread of wages paid within each classification to determine any evidence of discriminatory wage practices.

c. The contractor will periodically review selected personnel actions in depth to determine whether there is evidence of discrimination. Where evidence is found, the contractor will promptly take corrective action. If the review indicates that the discrimination may extend beyond the actions reviewed, such corrective action shall include all affected persons.

d. The contractor will promptly investigate all complaints of alleged discrimination made to the contractor in connection with his obligations under this contract, will attempt to resolve such complaints, and will take appropriate corrective action within a reasonable time. If the investigation indicates that the discrimination may affect persons other than the complainant, such corrective action shall include such other persons. Upon completion of each investigation, the contractor will inform every complainant of all of his avenues of appeal.

6. Training and Promotion.

a. The contractor will assist in locating, qualifying, and increasing the skills of minority group and women employees, and applicants for employment.

b. Consistent with the contractor's work force requirements and as permissible under Federal and State regulations, the contractor shall make full use of training programs, i.e., apprenticeship, and on-the-job training programs for the geographical area of contract performance. Where feasible, 25 percent of apprentices or trainees in each occupation shall be in their first year of apprenticeship or training. In the event a special provision

for training is provided under this contract, this subparagraph will be superseded as indicated in the special provision.

c. The contractor will advise employees and applicants for employment of available training programs and entrance requirements for each.

d. The contractor will periodically review the training and promotion potential of minority group and women employees and will encourage eligible employees to apply for such training and promotion.

7. Unions. If the contractor relies in whole or in part upon unions as a source of employees, the contractor will use his/her best efforts to obtain the cooperation of such unions to increase opportunities for minority groups and women within the unions, and to effect referrals by such unions of minority and female employees. Actions by the contractor either directly or through a contractor's association acting as agent will include the procedures set forth below:

   a. The contractor will use best efforts to develop, in cooperation with the unions, joint training programs aimed toward qualifying more minority group members and women for membership in the unions and increasing the skills of minority group employees and women so that they may qualify for higher paying employment.

   b. The contractor will use best efforts to incorporate an EEO clause into each union agreement to the end that such union will be contractually bound to refer applicants without regard to their race, color, religion, sex, national origin, age or disability.

   c. The contractor is to obtain information as to the referral practices and policies of the labor union except that to the extent such information is within the exclusive possession of the labor union and such labor union refuses to furnish such information to the contractor, the contractor shall so certify to the SHA and shall set forth what efforts have been made to obtain such information.

   d. In the event the union is unable to provide the contractor with a reasonable flow of minority and women referrals within the time limit set forth in the collective bargaining agreement, the contractor will, through independent recruitment efforts, fill the employment vacancies without regard to race, color, religion, sex, national origin, age or disability; making full efforts to obtain qualified and/or qualifiable minority group persons and women. (The DOL has held that it shall be no excuse that the union with which the contractor has a collective bargaining agreement providing for exclusive referral failed to refer minority employees.) In the event the union referral practice prevents the contractor from meeting the obligations pursuant to Executive Order 11246, as amended, and these special provisions, such contractor shall immediately notify the SHA.

8. Selection of Subcontractors, Procurement of Materials and Leasing of Equipment. The contractor shall not discriminate on the grounds of race, color, religion, sex, national origin, age or disability in the selection and retention of subcontractors, including procurement of materials and leases of equipment.

a. The contractor shall notify all potential subcontractors and suppliers of his/her EEO obligations under this contract.

b. Disadvantaged business enterprises (DBE), as defined in 49 CFR 23, shall have equal opportunity to compete for and perform subcontracts which the contractor enters into pursuant to this contract. The contractor will use his best efforts to solicit bids from and to utilize DBE subcontractors or subcontractors with meaningful minority group and female representation among their employees. Contractors shall obtain lists of DBE construction firms from SHA personnel.

c. The contractor will use his best efforts to ensure subcontractor compliance with their EEO obligations.

9. Records and Reports. The contractor shall keep such records as necessary to document compliance with the EEO requirements. Such records shall be retained for a period of three years following completion of the contract work and shall be available at reasonable times and places for inspection by authorized representatives of the SHA and the FHWA.

a. The records kept by the contractor shall document the following:

(1) The number of minority and non-minority group members and women employed in each work classification on the project;

(2) The progress and efforts being made in cooperation with unions, when applicable, to increase employment opportunities for minorities and women;

(3) The progress and efforts being made in locating, hiring, training, qualifying, and upgrading minority and female employees; and

(4) The progress and efforts being made in securing the services of DBE subcontractors or subcontractors with meaningful minority and female representation among their employees.

b. All such records must be retained for a period of three years following completion of the contract work and shall be available at reasonable times and places for inspection by authorized representatives of the MDOT and the Federal Highway Administration.

The Contractor will submit to the MDOT a report for the month of July, indicating the total hours worked by minority, women and non-minority group employees currently engaged in each work classification required by the contract work. This information is to be reported on Form PR-1391. If on-the-job training is being required by "Training Special Provision," the Contractor will be required to furnish Form FHWA-1409. The report is required for week ending July 15 and can be obtained from MDOT, is due by week ending August 20th. This report is to be furnished directly to MDOT - Civil Rights Office.

III. <u>NONSEGREGATED FACILITIES</u> (Applicable to all Federal-aid construction contracts and to all related subcontracts of $10,000 or more.)

a. By submission of this bid, the execution of this contract or subcontract, or the consummation of this material supply agreement or purchase order, as appropriate, the bidder, Federal-aid construction contractor, subcontractor, material supplier, or vendor, as appropriate, certifies that the firm does not maintain or provide for its employees any segregated facilities at any of its establishments, and that the firm does not permit its employees to perform their services at any location, under its control, where segregated facilities are maintained. The firm agrees that a breach of this certification is a violation of the EEO provisions of this contract. The firm further certifies that no employee will be denied access to adequate facilities on the basis of sex or disability.

b. As used in this certification, the term "segregated facilities" means any waiting rooms, work areas, restrooms and washrooms, restaurants and other eating areas, time clocks, locker rooms, and other storage or dressing areas, parking lots, drinking fountains, recreation or entertainment areas, transportation, and housing facilities provided for employees which are segregated by explicit directive, or are, in fact, segregated on the basis of race, color, religion, national origin, age or disability, because of habit, local custom, or otherwise. The only exception will be for the disabled when the demands for accessibility override (e.g. disabled parking).

c. The contractor agrees that it has obtained or will obtain identical certification from proposed subcontractors or material suppliers prior to award of subcontracts or consummation of material supply agreements of $10,000 or more and that it will retain such certifications in its files.

IV. PAYMENT OF PREDETERMINED MINIMUM WAGE (Applicable to all Federal-aid construction contracts exceeding $2,000 and to all related subcontracts, except for projects located on roadways classified as local roads or rural minor collectors, which are exempt.)

1. General:

   a. All mechanics and laborers employed or working upon the site of the work will be paid unconditionally and not less often than once a week and without subsequent deduction or rebate on any account [except such payroll deductions as are permitted by regulations (29 CFR 3) issued by the Secretary of Labor under the Copeland Act (40 U.S.C. 276c)] the full amounts of wages and bona fide fringe benefits (or cash equivalents thereof) due at time of payment. The payment shall be computed at wage rates not less than those contained in the wage determination of the Secretary of Labor (hereinafter "the wage determination") which is attached hereto and made a part hereof, regardless of any contractual relationship which may be alleged to exist between the contractor or its subcontractors and such laborers and mechanics. The wage determination (including any additional classifications and wage rates conformed under paragraph 2 of this Section IV and the DOL poster (WH-1321) or Form FHWA-1495) shall be posted at all times by the contractor and its subcontractors at the site of the work in a prominent and accessible place where it can be easily seen by the workers. For the purpose of this Section, contributions made or costs reasonably anticipated for bona fide fringe benefits under Section 1(b)(2) of the Davis-Bacon Act (40 U.S.C. 276a) on behalf of laborers or mechanics are considered wages paid to such laborers or mechanics, subject to the

provisions of Section IV, paragraph 3b, hereof. Also, for the purpose of this Section, regular contributions made or costs incurred for more than a weekly period (but not less often than quarterly) under plans, funds, or programs, which cover the particular weekly period, are deemed to be constructively made or incurred during such weekly period. Such laborers and mechanics shall be paid the appropriate wage rate and fringe benefits on the wage determination for the classification of work actually performed, without regard to skill, except as provided in paragraphs 4 and 5 of this Section IV.

b. Laborers or mechanics performing work in more than one classification may be compensated at the rate specified for each classification for the time actually worked therein, provided, that the employer's payroll records accurately set forth the time spent in each classification in which work is performed.

c. All rulings and interpretations of the Davis-Bacon Act and related acts contained in 29 CFR 1, 3, and 5 are herein incorporated by reference in this contract.

2. Classification:

a. The SHA contracting officer shall require that any class of laborers or mechanics employed under the contract, which is not listed in the wage determination, shall be classified in conformance with the wage determination.

b. The contracting officer shall approve an additional classification, wage rate and fringe benefits only when the following criteria have been met:

(1) the work to be performed by the additional classification requested is not performed by a classification in the wage determination;

(2) the additional classification is utilized in the area by the construction industry;

(3) the proposed wage rate, including any bona fide fringe benefits, bears a reasonable relationship to the wage rates contained in the wage determination; and

(4) with respect to helpers, when such a classification prevails in the area in which the work is performed.

c. If the contractor or subcontractors, as appropriate, the laborers and mechanics (if known) to be employed in the additional classification or their representatives, and the contracting officer agree on the classification and wage rate (including the amount designated for fringe benefits where appropriate), a report of the action taken shall be sent by the contracting officer to the DOL, Administrator of the Wage and Hour Division, Employment Standards Administration, Washington, D.C. 20210. The Wage and Hour Administrator, or an authorized representative, will approve, modify, or disapprove every additional classification action within 30 days of receipt and so advise the contracting officer or will notify the contracting officer within the 30-day period that additional time is necessary.

d. In the event the contractor or subcontractors, as appropriate, the laborers or mechanics to be employed in the additional classification or their representatives, and the contracting officer do not agree on the proposed classification and wage rate (including the amount designated for fringe benefits, where appropriate), the contracting officer shall refer the questions, including the views of all interested parties and the recommendation of the contracting officer, to the Wage and Hour Administrator for determination. Said Administrator, or an authorized representative, will issue a determination within 30 days of receipt and so advise the contracting officer or will notify the contracting officer within the 30-day period that additional time is necessary

e. The wage rate (including fringe benefits where appropriate) determined pursuant to paragraph 2c or 2d of this Section IV shall be paid to all workers performing work in the additional classification from the first day on which work is performed in the classification.

3. Payment of Fringe Benefits:

a. Whenever the minimum wage rate prescribed in the contract for a class of laborers or mechanics includes a fringe benefit which is not expressed as an hourly rate, the contractor or subcontractors, as appropriate, shall either pay the benefit as stated in the wage determination or shall pay another bona fide fringe benefit or an hourly case equivalent thereof.

b. If the contractor or subcontractor, as appropriate, does not make payments to a trustee or other third person, he/she may consider as a part of the wages of any laborer or mechanic the amount of any costs reasonably anticipated in providing bona fide fringe benefits under a plan or program, provided, that the Secretary of Labor has found, upon the written request of the contractor, that the applicable standards of the Davis-Bacon Act have been met. The Secretary of Labor may require the contractor to set aside in a separate account assets for the meeting of obligations under the plan or program.

4. Apprentices and Trainees (Programs of the U.S. DOL) and Helpers:

a. Apprentices:

(1) Apprentices will be permitted to work at less than the predetermined rate for the work they performed when they are employed pursuant to and individually registered in a bona fide apprenticeship program registered with the DOL, Employment and Training Administration, Bureau of Apprenticeship and Training, or with a State apprenticeship agency recognized by the Bureau, or if a person is employed in his/her first 90 days of probationary employment as an apprentice in such an apprenticeship program, who is not individually registered in the program, but who has been certified by the Bureau of Apprenticeship and Training or a State apprenticeship agency (where appropriate) to be eligible for probationary employment as an apprentice.

(2) The allowable ratio of apprentices to journeyman-level employees on the job site in any craft classification shall not be greater than the ratio permitted to the contractor

as to the entire work force under the registered program. Any employee listed on a payroll at an apprentice wage rate, who is not registered or otherwise employed as stated above, shall be paid not less than the applicable wage rate listed in the wage determination for the classification of work actually performed. In addition, any apprentice performing work on the job site in excess of the ratio permitted under the registered program shall be paid not less than the applicable wage rate on the wage determination for the work actually performed. Where a contractor or subcontractor is performing construction on a project in a locality other than that in which its program is registered, the ratios and wage rates (expressed in percentages of the journeyman-level hourly rate) specified in the contractor's or subcontractor's registered program shall be observed.

(3) Every apprentice must be paid at not less than the rate specified in the registered program for the apprentice's level of progress, expressed as a percentage of the journeyman-level hourly rate specified in the applicable wage determination. Apprentices shall be paid fringe benefits in accordance with the provisions of the apprenticeship program. If the apprenticeship program does not specify fringe benefits, apprentices must be paid the full amount of fringe benefits listed on the wage determination for the applicable classification. If the Administrator for the Wage and Hour Division determines that a different practice prevails for the applicable apprentice classification, fringes shall be paid in accordance with that determination.

(4) In the event the Bureau of Apprenticeship and Training, or a State apprenticeship agency recognized by the Bureau, withdraws approval of an apprenticeship program, the contractor or subcontractor will no longer be permitted to utilize apprentices at less than the applicable predetermined rate for the comparable work performed by regular employees until an acceptable program is approved.

b. Trainees:

(1) Except as provided in 29 CFR 5.16, trainees will not be permitted to work at less than the predetermined rate for the work performed unless they are employed pursuant to and individually registered in a program which has received prior approval, evidenced by formal certification by the DOL, Employment and Training Administration.

(2) The ratio of trainees to journeyman-level employees on the job site shall not be greater than permitted under the plan approved by the Employment and Training Administration. Any employee listed on the payroll at a trainee rate who is not registered and participating in a training plan approved by the Employment and Training Administration shall be paid not less than the applicable wage rate on the wage determination for the classification of work actually performed. In addition, any trainee performing work on the job site in excess of the ratio permitted under the registered program shall be paid not less than the applicable wage rate on the wage determination for the work actually performed.

(3) Every trainee must be paid at not less than the rate specified in the approved program for his/her level of progress, expressed as a percentage of the journeyman-level hourly rate specified in the applicable wage determination. Trainees shall be paid fringe benefits in accordance with the provisions of the trainee program. If the trainee program does not mention fringe benefits, trainees shall be paid the full amount of fringe benefits listed on the wage determination unless the Administrator of the Wage and Hour Division determines that there is an apprenticeship program associated with the corresponding journeyman-level wage rate on the wage determination which provides for less than full fringe benefits for apprentices, in which case such trainees shall receive the same fringe benefits as apprentices.

(4) In the event the Employment and Training Administration withdraws approval of a training program, the contractor or subcontractor will no longer be permitted to utilize trainees at less than the applicable predetermined rate for the work performed until an acceptable program is approved.

c. Helpers. Helpers will be permitted to work on a project if the helper classification is specified and defined on the applicable wage determination or is approved pursuant to the conformance procedure set forth in Section IV.2. Any worker listed on a payroll at a helper wage rate, who is not a helper under a approved definition, shall be paid not less than the applicable wage rate on the wage determination for the classification of work actually performed.

5. Apprentices and Trainees (Programs of the U.S. DOT). Apprentices and trainees working under apprenticeship and skill training programs which have been certified by the Secretary of Transportation as promoting EEO in connection with Federal-aid highway construction programs are not subject to the requirements of paragraph 4 of this Section IV. The straight time hourly wage rates for apprentices and trainees under such programs will be established by the particular programs. The ratio of apprentices and trainees to journeymen shall not be greater than permitted by the terms of the particular program.

6. Withholding. The SHA shall upon its own action or upon written request of an authorized representative of the DOL withhold, or cause to be withheld, from the contractor or subcontractor under this contract or any other Federal contract with the same prime contractor, or any other Federally-assisted contract subject to Davis-Bacon prevailing wage requirements which is held by the same prime contractor, as much of the accrued payments or advances as may be considered necessary to pay laborers and mechanics, including apprentices, trainees, and helpers, employed by the contractor or any subcontractor the full amount of wages required by the contract. In the event of failure to pay any laborer or mechanic, including any apprentice, trainee, or helper, employed or working on the site of the work, all or part of the wages required by the contract, the SHA contracting officer may, after written notice to the contractor, take such action as may be necessary to cause the suspension of any further payment, advance, or guarantee of funds until such violations have ceased.

7. Overtime Requirements. No contractor or subcontractor contracting for any part of the contract work which may require or involve the employment of laborers, mechanics, watchmen, or guards (including apprentices, trainees, and helpers described in paragraphs 4

and 5 above) shall require or permit any laborer, mechanic, watchman, or guard in any workweek in which he/she is employed on such work, to work in excess of 40 hours in such workweek unless such laborer, mechanic, watchman, or guard receives compensation at a rate not less than one-and-one-half times his/her basic rate of pay for all hours worked in excess of 40 hours in such workweek.

8. Violation. Liability for Unpaid Wages; Liquidated Damages: In the event of any violation of the clause set forth in paragraph 7 above, the contractor and any subcontractor responsible thereof shall be liable to the affected employee for his/her unpaid wages. In addition, such contractor and subcontractor shall be liable to the United States (in the case of work done under contract for the District of Columbia or a territory, to such District or to such territory) for liquidated damages. Such liquidated damages shall be computed with respect to each individual laborer, mechanic, watchman, or guard employed in violation of the clause set forth in paragraph 7, in the sum of $10 for each calendar day on which such employee was required or permitted to work in excess of the standard work week of 40 hours without payment of the overtime wages required by the clause set forth in paragraph 7.

9. Withholding for Unpaid Wages and Liquidated Damages. The SHA shall upon its own action or upon written request of any authorized representative of the DOL withhold, or cause to be withheld, from any monies payable on account of work performed by the contractor or subcontractor under any such contract or any other Federal contract with the same prime contractor, or any other Federally-assisted contract subject to the Contract Work Hours and Safety Standards Act, which is held by the same prime contractor, such sums as may be determined to be necessary to satisfy any liabilities of such contractor or subcontractor for unpaid wages and liquidated damages as provided in the clause set forth in paragraph 8 above.

V. STATEMENTS AND PAYROLLS (Applicable to all Federal-aid construction contracts exceeding $2,000 and to all related subcontracts, except for projects located on roadways classified as local roads or rural collectors, which are exempt.)

1. Compliance with Copeland Regulations (29 CFR 3). The contractor shall comply with the Copeland Regulations of the Secretary of Labor which are herein incorporated by reference.

2. Payrolls and Payroll Records:

   a. Payrolls and basic records relating thereto shall be maintained by the contractor and each subcontractor during the course of the work and preserved for a period of 3 years from the date of completion of the contract for all laborers, mechanics, apprentices, trainees, watchmen, helpers, and guards working at the site of the work.

   b. The payroll records shall contain the name, social security number, and address of each such employee; his or her correct classification; hourly rates of wages paid (including rates of contributions or costs anticipated for bona fide fringe benefits or cash equivalent thereof the types described in Section 1(b)(2)(B) of the Davis Bacon Act); daily and weekly number of hours worked; deductions made; and actual wages paid. In addition, for Appalachian contracts, the payroll records shall contain a notation indicating whether the employee does, or does not, normally reside in the labor area as defined in

Attachment A, paragraph 1. Whenever the Secretary of Labor, pursuant to Section IV, paragraph 3b, has found that the wages of any laborer or mechanic include the amount of any costs reasonably anticipated in providing benefits under a plan or program described in Section 1(b)(2)(B) of the Davis Bacon Act, the contractor and each subcontractor shall maintain records which show that the commitment to provide such benefits is enforceable, that the plan or program is financially responsible, that the plan or program has been communicated in writing to the laborers or mechanics affected, and show the cost anticipated or the actual cost incurred in providing benefits. Contractors or subcontractors employing apprentices or trainees under approved programs shall maintain written evidence of the registration of apprentices and trainees, and ratios and wage rates prescribed in the applicable programs.

c. Each contractor and subcontractor shall furnish, each week in which any contract work is performed, to the SHA resident engineer a payroll of wages paid each of its employees (including apprentices, trainees, and helpers, described in Section IV, paragraphs 4 and 5, and watchmen and guards engaged on work during the preceding weekly payroll period). The payroll submitted shall set out accurately and completely all of the information required to be maintained under paragraph 2b of this Section V. This information may be submitted in any form desired. Optional Form WH-347 is available for this purpose and may be purchased from the Superintendent of Documents (Federal stock number 029-005-0014-1), U.S. Government Printing Office, Washington, D.C. 20402. The prime contractor is responsible for the submission of copies of payrolls by all subcontractors.

d. Each payroll submitted shall be accompanied by a "Statement of Compliance," signed by the contractor or subcontractor or his/her agent who pays or supervises the payment of the persons employed under the contract and shall certify the following:

   (1) that the payroll for the payroll period contains the information required to be maintained under paragraph 2b of this Section V and that such information is correct and complete;

   (2) that such laborer or mechanic (including each helper, apprentice, and trainee) employed on the contract during the payroll period has been paid the full weekly wages earned, without rebate, either directly or indirectly, and that no deductions have been made either directly or indirectly from the full wages earned, other than permissible deductions as set forth in the Regulations, 29 CFR 3;

   (3) that each laborer or mechanic has been paid not less that the applicable wage rate and fringe benefits or cash equivalent for the classification of worked performed, as specified in the applicable wage determination incorporated into the contract.

e. The weekly submission of a properly executed certification set forth on the reverse side of Optional Form WH-347 shall satisfy the requirement for submission of the "Statement of Compliance" required by paragraph 2d of this Section V.

f. The falsification of any of the above certifications may subject the contractor to civil or criminal prosecution under 18 U.S.C. 1001 and 31 U.S.C. 231.

g. The contractor or subcontractor shall make the records required under paragraph 2b of this Section V available for inspection, copying, or transcription by authorized representatives of the SHA, the FHWA, or the DOL, and shall permit such representatives to interview employees during working hours on the job. If the contractor or subcontractor fails to submit the required records or to make them available, the SHA, the FHWA, the DOL, or all may, after written notice to the contractor, sponsor, applicant, or owner, take such actions as may be necessary to cause the suspension of any further payment, advance, or guarantee of funds. Furthermore, failure to submit the required records upon request or to make such records available may be grounds for debarment action pursuant to 29 CFR 5.12.

VI. RECORD OF MATERIALS, SUPPLIES, AND LABOR

1. On all Federal-aid contracts on the National Highway System, except those which provide solely for the installation of protective devices at railroad grade crossings, those which are constructed on a force account or direct labor basis, highway beautification contracts, and contracts for which the total final construction cost for roadway and bridge is less than $1,000,000 (23 CFR 635) the contractor shall:

   a. Become familiar with the list of specific materials and supplies contained in Form FHWA-47, "Statement of Materials and Labor Used by Contractor of Highway Construction Involving Federal Funds," prior to the commencement of work under this contract.

   b. Maintain a record of the total cost of all materials and supplies purchased for and incorporated in the work, and also of the quantities of those specific materials and supplies listed on Form FHWA-47, and in the units shown on Form FHWA-47.

   c. Furnish, upon the completion of the contract, to the SHA resident engineer on Form FHWA-47 together with the data required in paragraph 1b relative to materials and supplies, a final labor summary of all contract work indicating the total hours worked and the total amount earned.

2. At the prime contractor's option, either a single report covering all contract work or separate reports for the contractor and for each subcontract shall be submitted.

VII. SUBLETTING OR ASSIGNING THE CONTRACT

1. The contractor shall perform with its own organization contract work amounting to not less than 30 percent (or a greater percentage if specified elsewhere in the contract) of the total original contract price, excluding any specialty items designated by the State. Specialty items may be performed by subcontract and the amount of any such specialty items performed may be deducted from the total original contract price before computing the amount of work required to be performed by the contractor's own organization (23 CFR 635).

   a. "Its own organization" shall be construed to include only workers employed and paid directly by the prime contractor and equipment owned or rented by the prime contractor,

with or without operators. Such term does not include employees or equipment of a subcontractor, assignee, or agent of the prime contractor.

b. "Specialty Items" shall be construed to be limited to work that requires highly specialized knowledge, abilities, or equipment not ordinarily available in the type of contracting organizations qualified and expected to bid on the contract as a whole and in general are to be limited to minor components of the overall contract.

2. The contract amount upon which the requirements set forth in paragraph 1 of Section VII is computed includes the cost of material and manufactured products which are to be purchased or produced by the contractor under the contract provisions.

3. The contractor shall furnish (a) a competent superintendent or supervisor who is employed by the firm, has full authority to direct performance of the work in accordance with the contract requirements, and is in charge of all construction operations (regardless of who performs the work) and (b) such other of its own organizational resources (supervision, management, and engineering services) as the SHA contracting officer determines is necessary to assure the performance of the contract.

4. No portion of the contract shall be sublet, assigned or otherwise disposed of except with the written consent of the SHA contracting officer, or authorized representative, and such consent when given shall not be construed to relieve the contractor of any responsibility for the fulfillment of the contract. Written consent will be given only after the SHA has assured that each subcontract is evidenced in writing and that it contains all pertinent provisions and requirements of the prime contract.

VIII. SAFETY: ACCIDENT PREVENTION

1. In the performance of this contract the contractor shall comply with all applicable Federal, State, and local laws governing safety, health, and sanitation (23 CFR 635). The contractor shall provide all safeguards, safety devices and protective equipment and take any other needed actions as it determines, or as the SHA contracting officer may determine, to be reasonably necessary to protect the life and health of employees on the job and the safety of the public and to protect property in connection with the performance of the work covered by the contract.

2. It is a condition of this contract, and shall be made a condition of each subcontract, which the contractor enters into pursuant to this contract, that the contractor and any subcontractor shall not permit any employee, in performance of the contract, to work in surroundings or under conditions which are unsanitary, hazardous or dangerous to his/her health or safety, as determined under construction safety and health standards (29 CFR 1926) promulgated by the Secretary of Labor, in accordance with Section 107 of the Contract Work Hours and Safety Standards Act (40 U.S.C. 333).

3. Pursuant to 29 CFR 1926.3, it is a condition of this contract that the Secretary of Labor or authorized representative thereof, shall have right of entry to any site of contract performance to inspect or investigate the matter of compliance with the construction safety and health

standards and to carry out the duties of the Secretary under Section 107 of the Contract Work Hours and Safety Standards Act (40 U.S.C. 333).

IX. FALSE STATEMENTS CONCERNING HIGHWAY PROJECTS In order to assure high quality and durable construction in conformity with approved plans and specifications and a high degree of reliability on statements and representations made by engineers, contractors, suppliers, and workers on Federal-aid highway projects, it is essential that all persons concerned with the project perform their functions as carefully, thoroughly, and honestly as possible. Willful falsification, distortion, or misrepresentation with respect to any facts related to the project is a violation of Federal law. To prevent any misunderstanding regarding the seriousness of these and similar acts, the following notice shall be posted on each Federal-aid highway project (23 CFR 635) in one or more places where it is readily available to all persons concerned with the project:

NOTICE TO ALL PERSONNEL ENGAGED ON FEDERAL-AID HIGHWAY PROJECTS

18 U.S.C. 1020 reads as follows:

"Whoever, being an officer, agent, or employee of the United States, or of any State or Territory, or whoever, whether a person, association, firm, or corporation, knowingly makes any false statement, false representation, or false report as to the character, quality, quantity, or cost of the material used or to be used, or the quantity or quality of the work performed or to be performed, or the cost thereof in connection with the submission of plans, maps, specifications, contracts, or costs of construction on any highway or related project submitted for approval to the Secretary of Transportation; or

Whoever knowingly makes any false statement, false representation, false report or false claim with respect to the character, quality, quantity, or cost of any work performed or to be performed, or materials furnished or to be furnished, in connection with the construction of any highway or related project approved by the Secretary of Transportation; or

Whoever knowingly makes any false statement or false representation as to material fact in any statement, certificate, or report submitted pursuant to provisions of the Federal-aid Roads Act approved July 1, 1916, (39 Stat. 355), as amended and supplemented;

Shall be fined not more that $10,000 or imprisoned not more than 5 years or both."

X. IMPLEMENTATION OF CLEAN AIR ACT AND FEDERAL WATER POLLUTION CONTROL ACT (Applicable to all Federal-aid construction contracts and to all related subcontracts of $100,000 or more.)

By submission of this bid or the execution of this contract, or subcontract, as appropriate, the bidder, Federal-aid construction contractor, or subcontractor, as appropriate, will be deemed to have stipulated as follows:

1. That any facility that is or will be utilized in the performance of this contract, unless such contract is exempt under the Clean Air Act, as amended (42 U.S.C. 1857 et seq., as amended by Pub.L. 91-604), and under the Federal Water Pollution Control Act, as amended (33 U.S.C. 1251 et seq., as amended by Pub.L. 92-500), Executive Order 11738, and regulations

in implementation thereof (40 CFR 15) is not listed, on the date of contract award, on the U.S. Environmental Protection Agency (EPA) List of Violating Facilities pursuant to 40 CFR 15.20.

2. That the firm agrees to comply and remain in compliance with all the requirements of Section 114 of the Clean Air Act and Section 308 of the Federal Water Pollution Control Act and all regulations and guidelines listed thereunder.

3. That the firm shall promptly notify the SHA of the receipt of any communication from the Director, Office of Federal Activities, EPA, indicating that a facility that is or will be utilized for the contract is under consideration to be listed on the EPA List of Violating Facilities.

4. That the firm agrees to include or cause to be included the requirements of paragraph 1 through 4 of this Section X in every nonexempt subcontract, and further agrees to take such action as the government may direct as a means of enforcing such requirements.

XI. CERTIFICATION REGARDING DEBARMENT, SUSPENSION, INELIGIBILITY AND VOLUNTARY EXCLUSION

1. Instructions for Certification - Primary Covered Transactions:
(Applicable to all Federal-aid contracts - 49 CFR 29)

   a. By signing and submitting this proposal, the prospective primary participant is providing the certification set out below.

   b. The inability of a person to provide the certification set out below will not necessarily result in denial of participation in this covered transaction. The prospective participant shall submit an explanation of why it cannot provide the certification set out below. The certification or explanation will be considered in connection with the department or agency's determination whether to enter into this transaction. However, failure of the prospective primary participant to furnish a certification or an explanation shall disqualify such a person from participation in this transaction.

   c. The certification in this clause is a material representation of fact upon which reliance was placed when the department or agency determined to enter into this transaction. If it is later determined that the prospective primary participant knowingly rendered an erroneous certification, in addition to other remedies available to the Federal Government, the department or agency may terminate this transaction for cause of default.

   d. The prospective primary participant shall provide immediate written notice to the department or agency to whom this proposal is submitted if any time the prospective primary participant learns that its certification was erroneous when submitted or has become erroneous by reason of changed circumstances.

   e. The terms "covered transaction," "debarred," "suspended," "ineligible," "lower tier covered transaction," "participant," "person," "primary covered transaction," "principal," "proposal," and "voluntarily excluded," as used in this clause, have the meanings set out

in the Definitions and Coverage sections of rules implementing Executive Order 12549. You may contact the department or agency to which this proposal is submitted for assistance in obtaining a copy of those regulations.

f. The prospective primary participant agrees by submitting this proposal that, should the proposed covered transaction be entered into, it shall not knowingly enter into any lower tier covered transaction with a person who is debarred, suspended, declared ineligible, or voluntarily excluded from participation in this covered transaction, unless authorized by the department or agency entering into this transaction.

g. The prospective primary participant further agrees by submitting this proposal that it will include the clause titled "Certification Regarding Debarment, Suspension, Ineligibility and Voluntary Exclusion-Lower Tier Covered Transaction," provided by the department or agency entering into this covered transaction, without modification, in all lower tier covered transactions and in all solicitations for lower tier covered transactions.

h. A participant in a covered transaction may rely upon a certification of a prospective participant in a lower tier covered transaction that is not debarred, suspended, ineligible, or voluntarily excluded from the covered transaction, unless it knows that the certification is erroneous. A participant may decide the method and frequency by which it determines the eligibility of its principals. Each participant may, but is not required to, check the nonprocurement portion of the "Lists of Parties Excluded From Federal Procurement or Nonprocurement Programs" (Nonprocurement List) which is compiled by the General Services Administration.

i. Nothing contained in the foregoing shall be construed to require establishment of a system of records in order to render in good faith the certification required by this clause. The knowledge and information of participant is not required to exceed that which is normally possessed by a prudent person in the ordinary course of business dealings.

j. Except for transactions authorized under paragraph f of these instructions, if a participant in a covered transaction knowingly enters into a lower tier covered transaction with a person who is suspended, debarred, ineligible, or voluntarily excluded from participation in this transaction, in addition to other remedies available to the Federal Government, the department or agency may terminate this transaction for cause or default.

****

Certification Regarding Debarment, Suspension, Ineligibility and Voluntary Exclusion--
Primary Covered Transactions

1. The prospective primary participant certifies to the best of its knowledge and belief, that it and its principals:

a. Are not presently debarred, suspended, proposed for debarment, declared ineligible, or voluntarily excluded from covered transactions by any Federal department or agency;

b. Have not within a 3-year period preceding this proposal been convicted of or had a civil judgment rendered against them for commission of fraud or a criminal offense in connection with obtaining, attempting to obtain, or performing a public (Federal, State or

local) transaction or contract under a public transaction; violation of Federal or State antitrust statutes or commission of embezzlement, theft, forgery, bribery, falsification or destruction of records, making false statements, or receiving stolen property;

c. Are not presently indicted for or otherwise criminally or civilly charged by a governmental entity (Federal, State or local) with commission of any of the offenses enumerated in paragraph 1b of this certification; and

d. Have not within a 3-year period preceding this application/proposal had one or more public transactions (Federal, State or local) terminated for cause or default.

2. Where the prospective primary participant is unable to certify to any of the statements in this certification, such prospective participant shall attach an explanation to this proposal.

****

2. Instructions for Certification - Lower Tier Covered Transactions: (Applicable to all subcontracts, purchase orders and other lower tier transactions of $25,000 or more - 49 CFR 29)

a. By signing and submitting this proposal, the prospective lower tier is providing the certification set out below.

b. The certification in this clause is a material representation of fact upon which reliance was placed when this transaction was entered into. If it is later determined that the prospective lower tier participant knowingly rendered an erroneous certification, in addition to other remedies available to the Federal Government, the department, or agency with which this transaction originated may pursue available remedies, including suspension and/or debarment.

c. The prospective lower tier participant shall provide immediate written notice to the person to which this proposal is submitted if at any time the prospective lower tier participant learns that its certification was erroneous by reason of changed circumstances.

d. The terms "covered transaction," "debarred," "suspended," "ineligible," "primary covered transaction," "participant," "person," "principal," "proposal," and "voluntarily excluded," as used in this clause, have the meanings set out in the Definitions and Coverage sections of rules implementing Executive Order 12549. You may contact the person to which this proposal is submitted for assistance in obtaining a copy of those regulations.

e. The prospective lower tier participant agrees by submitting this proposal that, should the proposed covered transaction be entered into, it shall not knowingly enter into any lower tier covered transaction with a person who is debarred, suspended, declared ineligible, or voluntarily excluded from participation in this covered transaction, unless authorized by the department or agency with which this transaction originated.

f. The prospective lower tier participant further agrees by submitting this proposal that it will include this clause titled "Certification Regarding Debarment, Suspension, Ineligibility and Voluntary Exclusion-Lower Tier Covered Transaction," without modification, in all lower tier covered transactions and in all solicitations for lower tier covered transactions.

g. A participant in a covered transaction may rely upon a certification of a prospective participant in a lower tier covered transaction that is not debarred, suspended, ineligible, or voluntarily excluded from the covered transaction, unless it knows that the certification is erroneous. A participant may decide the method and frequency by which it determines the eligibility of its principals. Each participant may, but is not required to, check the Nonprocurement List.

h. Nothing contained in the foregoing shall be construed to require establishment of a system of records in order to render in good faith the certification required by this clause. The knowledge and information of participant is not required to exceed that which is normally possessed by a prudent person in the ordinary course of business dealings.

i. Except for transactions authorized under paragraph e of these instructions, if a participant in a covered transaction knowingly enters into a lower tier covered transaction with a person who is suspended, debarred, ineligible, or voluntarily excluded from participation in this transaction, in addition to other remedies available to the Federal Government, the department or agency with which this transaction originated may pursue available remedies, including suspension and/or debarment.

****

Certification Regarding Debarment, Suspension, Ineligibility and Voluntary Exclusion--
Lower Tier Covered Transactions:

1. The prospective lower tier participant certifies, by submission of this proposal, that neither it nor its principals is presently debarred, suspended, proposed for debarment, declared ineligible, or voluntarily excluded from participation in this transaction by any Federal department or agency.

2. Where the prospective lower tier participant is unable to certify to any of the statements in this certification, such prospective participant shall attach an explanation to this proposal.

****

XII. CERTIFICATION REGARDING USE OF CONTRACT FUNDS FOR LOBBYING
(Applicable to all Federal-aid construction contracts and to all related subcontracts which exceed $100,000 - 49 CFR 20)

1. The prospective participant certifies, by signing and submitting this bid or proposal, to the best of his or her knowledge and belief, that:
   a. No Federal appropriated funds have been paid or will be paid, by or on behalf of the undersigned, to any person for influencing or attempting to influence an officer or employee of any Federal agency, a Member of Congress, an officer or employee of Congress, or an employee of a Member of Congress in connection with the awarding of any Federal contract, the making of any Federal grant, the making of any Federal loan, the entering into of any cooperative agreement, and the extension, continuation, renewal, amendment, or modification of any Federal contract, grant, loan, or cooperative agreement.

   b. If any funds other than Federal appropriated funds have been paid or will be paid to any person for influencing or attempting to influence an officer or employee of any Federal agency, a Member of Congress, an officer or employee of Congress, or an employee of a

Member of Congress in connection with this Federal contract, grant, loan, or cooperative agreement, the undersigned shall complete and submit Standard Form-LLL, "Disclosure Form to Report Lobbying," in accordance with its instructions.

2. This certification is a material representation of fact upon which reliance was placed when this transaction was made or entered into. Submission of this certification is a prerequisite for making or entering into this transaction imposed by 31 U.S.C. 1352. Any person who fails to file the required certification shall be subject to a civil penalty of not less than $10,000 and not more than $100,000 for each such failure.

3. The prospective participant also agrees by submitting his or her bid or proposal that he or she shall require that the language of this certification be included in all lower tier subcontracts, which exceed $100,000 and that all such recipients shall certify and disclose accordingly.

End of FHWA 1273

DEPARTMENT OF THE ARMY PERMIT

Permittee **Maine Dept. of Transportation, 16 State House Station, Augusta, Maine 04333**

Permit No. **NAE-2009-00514**

Issuing Office **New England District**

NOTE: The term "you" and its derivatives, as used in this permit, means the permittee or any future transferee. The term "this office" refers to the appropriate district or division office of the Corps of Engineers having jurisdiction over the permitted activity or the appropriate official of that office acting under the authority of the commanding officer.

You are authorized to perform work in accordance with the terms and conditions specified below.

Project Description:

Place permanent and temporary fill below the ordinary high water line and the high tide line of numerous waterways and in their adjacent freshwater and tidal wetlands throughout the State of Maine in order to repair, rehabilitate, or replace numerous existing deteriorated bridges or culverts.

Project Description Continued on Page 4

This work is shown on the attached plans entitled, "MAINE DOT, 2 YEAR BRIDGE PROJECTS", on six sheets, and dated "JUNE 2009" and with the 1:2000 USGS Quadrangle Map location plans and tables contained in the administrative record.

Project Location:

In numerous waterways and in their adjacent freshwater and tidal wetlands throughout the State of Maine

Permit Conditions:

General Conditions:

1. The time limit for completing the work authorized ends on December 31, 2019. If you find that you need more time to complete the authorized activity, submit your request for a time extension to this office for consideration at least one month before the above date is reached.

2. You must maintain the activity authorized by this permit in good condition and in conformance with the terms and conditions of this permit. You are not relieved of this requirement if you abandon the permitted activity, although you may make a good faith transfer to a third party in compliance with General Condition 4 below. Should you wish to cease to maintain the authorized activity or should you desire to abandon it without a good faith transfer, you must obtain a modification of this permit from this office, which may require restoration of the area.

3. If you discover any previously unknown historic or archeological remains while accomplishing the activity authorized by this permit, you must immediately notify this office of what you have found. We will initiate the Federal and state coordination required to determine if the remains warrant a recovery effort or if the site is eligible for listing in the National Register of Historic Places.

4. If you sell the property associated with this permit, you must obtain the signature of the new owner in the space provided and forward a copy of the permit to this office to validate the transfer of this authorization.

5. If a conditioned water quality certification has been issued for your project, you must comply with the conditions specified in the certification as special conditions to this permit. For your convenience, a copy of the certification is attached if it contains such conditions.

6. You must allow representatives from this office to inspect the authorized activity at any time deemed necessary to ensure that it is being or has been accomplished in accordance with the terms and conditions of your permit.

Special Conditions:

1. The permittee shall ensure that a copy of this permit is at the work site whenever work is being performed and that all personnel performing work at the site of the work authorized by this permit are fully aware of the terms and conditions of the permit. This permit, including its drawings and any appendices and other attachments, shall be made a part of any and all contracts and sub-contracts for work which affects areas of Corps of Engineers jurisdiction at the site of the work authorized by this permit. This shall be done by including the entire permit in the specifications for work.

Special Conditions continued on Page 4

Further Information:

1. Congressional Authorities: You have been authorized to undertake the activity described above pursuant to:

   X Section 10 of the Rivers and Harbors Act of 1899 (33 U.S.C. 403).

   X) Section 404 of the Clean Water Act (33 U.S.C. 1344).

   ( ) Section 103 of the Marine Protection, Research and Sanctuaries Act of 1972 (33 U.S.C. 1413).

2. Limits of this authorization.

   a. This permit does not obviate the need to obtain other Federal, state, or local authorizations required by law.

   b. This permit does not grant any property rights or exclusive privileges.

   c. This permit does not authorize any injury to the property or rights of others.

   d. This permit does not authorize interference with any existing or proposed Federal project.

3. Limits of Federal Liability. In issuing this permit, the Federal Government does not assume any liability for the following:

   a. Damages to the permitted project or uses thereof as a result of other permitted or unpermitted activities or from natural causes.

   b. Damages to the permitted project or uses thereof as a result of current or future activities undertaken by or on behalf of the United States in the public interest.

   c. Damages to persons, property, or to other permitted or unpermitted activities or structures caused by the activity authorized by this permit.

   d. Design or construction deficiencies associated with the permitted work.

e. Damage claims associated with any future modification, suspension, or revocation of this permit.

4. Reliance on Applicant's Data: The determination of this office that issuance of this permit is not contrary to the public interest was made in reliance on the information you provided.

5. Reevaluation of Permit Decision. This office may reevaluate its decision on this permit at any time the circumstances warrant. Circumstances that could require a reevaluation include, but are not limited to, the following:

a. You fail to comply with the terms and conditions of this permit.

b. The information provided by you in support of your permit application proves to have been false, incomplete, or inaccurate (See 4 above).

c. Significant new information surfaces which this office did not consider in reaching the original public interest decision.

Such a reevaluation may result in a determination that it is appropriate to use the suspension, modification, and revocation procedures contained in 33 CFR 325.7 or enforcement procedures such as those contained in 33 CFR 326.4 and 326.5. The referenced enforcement procedures provide for the issuance of an administrative order requiring you to comply with the terms and conditions of your permit and for the initiation of legal action where appropriate. You will be required to pay for any corrective measures ordered by this office, and if you fail to comply with such directive, this office may in certain situations (such as those specified in 33 CFR 209.170) accomplish the corrective measures by contract or otherwise and bill you for the cost.

6. Extensions. General condition 1 establishes a time limit for the completion of the activity authorized by this permit. Unless there are circumstances requiring either a prompt completion of the authorized activity or a reevaluation of the public interest decision, the Corps will normally give favorable consideration to a request for an extension of this time limit.

Your signature below, as permittee, indicates that you accept and agree to comply with the terms and conditions of this permit.

Judy C. Gates for John Dority — 7/15/09

(PERMITTEE) *(DATE)*

This permit becomes effective when the Federal official, designated to act for the Secretary of the Army, has signed below.

JM McCarthy — 7/15/09

for *(DISTRICT ENGINEER)* *(DATE)*

Philip T. Feir
Colonel, Corps of Engineers

When the structures or work authorized by this permit are still in existence at the time the property is transferred, the terms and conditions of this permit will continue to be binding on the new owner(s) of the property. To validate the transfer of this permit and the associated liabilities associated with compliance with its terms and conditions, have the transferee sign and date below.

(TRANSFEREE) *(DATE)*

☆U.S. GOVERNMENT PRINTING OFFICE: 1986 — 717-425

Project Description Continued from Page 1

This work is being conducted in response to Federal and State stimulus efforts and is designed to address critical bridges and other structures that need immediate attention to insure public safety and protect the economic vitality of Maine's transportation network. Refer to attached table(s) for a list of locations, scope of work, and anticipated impacts.

Special Conditions continued from Page 2

If the permit is issued after the construction specifications but before receipt of bids or quotes, the entire permit shall be included as an addendum to the specifications. If the permit is issued after receipt of bids or quotes, the entire permit shall be included in the contract or sub-contract as a change order. The term "entire permit" includes permit amendments. Although the permittee may assign various aspects of the work to different contractors or sub-contractors, all contractors and sub-contractors shall be obligated by contract to comply with all environmental protection provisions of the entire permit, and no contract or sub-contract shall require or allow unauthorized work in areas of Corps jurisdiction.

2. The permittee shall complete and return the enclosed Compliance Certification Form within one month following the completion of the authorized work.

3. Adequate sedimentation and erosion control devices, such as geotextile silt fences or other devices capable of filtering the fines involved, shall be installed and properly maintained to minimize impacts during construction. These devices must be removed upon completion of work and stabilization of disturbed areas. The sediment collected by these devices must also be removed and placed upland, in a manner that will prevent its later erosion and transport to a waterway or wetland.

4. The permittee shall implement all terms and conditions contained in the attached water quality certification from the Maine Dept. of Environmental Protection dated "May 13, 2008". Copies of all required submittals shall also be provided to the Corps.

5. No temporary fill (e.g., access roads, cofferdams) may be placed in waters or wetlands unless specifically authorized by this permit. If temporary fill is used, it shall be disposed of at an upland site and suitably contained to prevent its subsequent erosion into a water of the U.S., and the area shall be restored to its original contours (but not higher) and character upon completion of the project. During use, such temporary fill must be stabilized to prevent erosion or, in the case fill placed in flowing water (rivers or streams), clean washed stone should be used.

6. Except where stated otherwise, reports, drawings, correspondence and any other submittals required by this permit shall be marked with the words "Permit No. NAE-2009-00514" and shall be addressed to "Inspection Section, CENAE-R, U.S. Army Corps of Engineers, 696 Virginia Road, Concord, MA 01742-2751." Documents which are not marked and addressed in this manner may not reach their intended destination and do not comply with the requirements of this permit.

Special Conditions Continued on Page 5

Special Conditions Continued from Page 4

7. In order to minimize potential impacts to federally endangered shortnose sturgeon and Atlantic salmon and its critical habitat (NMFS Resources), the permittee shall comply with the attached conditions entitled "Corps of Engineers Permit No. NAE-2009-00514, Permit Special Conditions Resulting From Informal Endangered Species Act Consultation With National Marine Fisheries Service".

8. The permittee shall minimize the adverse effects to Atlantic salmon and its critical habitat and incidental take of Atlantic salmon in the rivers and streams where bridge or culvert projects will occur by employing construction techniques that avoid or minimize adverse effects to water quality, aquatic and riparian habitats, and other aquatic organisms. He shall also minimize adverse effects to Atlantic salmon and its critical habitat and incidental take of Atlantic salmon by ensuring that fish passage and habitat connectivity at culverts and bridges is either maintained in its current condition or is improved by the replacement or rehabilitated structure. In meeting these requirements, the permittee shall comply with the attached conditions entitled "Corps of Engineers Permit No. NAE-2009-00514, Permit Special Conditions Resulting From Formal Endangered Species Act Consultation With US Fish & Wildlife Service".

9. In-water work window extension. A project-specific time-of-year restriction may be extended by as much as 10 days without having to formally request permit modification provided:

a. The project site does not support federally endangered shortnose sturgeon, Atlantic salmon, or Atlantic salmon critical habitat. Any extension requests for these sites will be reviewed on a case-by-case basis and may require re-initiation of consultation.

b. Only the Maine DOT Coordination & Permits Division Manager or the Environmental Office Director may grant such an extension and only after state and/or federal fisheries agencies that initially requested the restriction have been notified and approve the extension request. It is understood that any request to fisheries agencies will include the need and justification for such an extension; that it will be a one-time only request; and that Maine DOT will not submit extension requests for projects delayed due to issues of scheduling or failure to complete work due to conditions within a contractor's control.

For any project that receives an extension to its time of year restriction, Maine DOT shall notify the Corps in writing to include the agency approval so the modification of an approved in-water work window for the project can be documented in the permit record.

10. Prior to construction on any single project, the permittee shall provide the Corps of Engineers with project plans for that project. The plans must be on 8-1/2" x 11" paper with a 3/4" margin at the top and must adequately show the proposed work. All plans must be labeled with the bridge number, DOT PIN if applicable, location (roadway name), town, and county. Plans shall be sent to the US Army Corps of Engineers, Maine Project Office, 675 Western Avenue #3, Manchester, Maine 04351; ATTN: Jay Clement. Any submittal(s) to the Corps in compliance with this condition should reference Corps permit no. NAE-2009-00514.

Special Conditions Continued on Page 6

Special Conditions Continued from Page 5

11. This permit does not authorize construction identified as a "Design Build" project. Any work subject to Corps jurisdiction for those bridges may not begin until after the permittee provides project plans that adequately show the proposed work and the Corps approves the work in writing by either an amendment to this permit or a separate permit action. Project plans shall be submitted in a timely fashion that will allow for review and as necessary, coordination/consultation with federal and state resource agencies and the Maine Historic Preservation Commission.

12. In order to fulfill the requirements of Section 106 of the National Historic Preservation Act of 1966, the permittee shall implement the stipulations contained in the attached Memorandum of Agreement.

13. For any bridge project that crosses navigable waters, the permittee must obtain a bridge permit or exemption from the US Coast Guard before beginning construction. For information contact Commander (obr), First Coast Guard District, One South Street - Battery Bldg, New York, NY 10004-5073; phone (212) 668-7021. Navigable waters in the State of Maine are all waters subject to the ebb and flood of the tide, the Penobscot River to Medway, the Kennebec River to Moosehead Lake, and the portion of Lake Umbagog within Maine.

US Army Corps of Engineers®
New England District

INDIVIDUAL PERMIT WORK-START NOTIFICATION FORM

(Minimum Notice: Two weeks before work begins)

****
* MAIL TO: U.S. Army Corps of Engineers, New England District *
*
* Policy Analysis/Technical Support Branch *
* Regulatory Division *
* 696 Virginia Road *
* Concord, Massachusetts 01742-2751 *
****

Corps of Engineers Permit No. NAE-2009-00514 was issued to the Maine Dept. of Transportation. This work is located in numerous waterways and wetlands throughout the State of Maine. The permit authorized the permittee to place permanent and temporary fills in order to repair, rehabilitate, or replace existing deteriorated bridges and culverts.

The people (e.g., contractor) listed below will do the work, and they understand the permit's conditions and limitations.

PLEASE PRINT OR TYPE

Name of Person/Firm: _____

Business Address: _____

_____ _____

_____ _____

_____

Telephone Numbers: ( ) _____ ( ) _____

Proposed Work Dates: **Start:** _____ **Finish:** _____

Permittee/Agent Signature: _____ **Date:** _____

Printed Name: _____ **Title:** _____

Date Permit Issued: _____ Date Permit Expires: _____

****

FOR USE BY THE CORPS OF ENGINEERS

PM: Clement **Submittals Required:** _____

Inspection Recommendation: Inspections should be tied to annual random inspections of PGP projects

_____

US Army Corps of Engineers®
New England District

(Minimum Notice: Permittee must sign and return notification within one month of the completion of work.)

COMPLIANCE CERTIFICATION FORM

USACE Project Number: NAE-2009-00514

Name of Permittee: Maine Dept. of Transportation

Permit Issuance Date: _____

Please sign this certification and return it to the following address upon completion of the activity and any mitigation required by the permit. You must submit this after the mitigation is complete, but not the mitigation monitoring, which requires separate submittals.

****
* MAIL TO: U.S. Army Corps of Engineers, New England District *
*
* Policy Analysis/Technical Support Branch, ATTN: Marie Farese *
*
* Regulatory Division *
* 696 Virginia Road *
* Concord, Massachusetts 01742-2751 *
****

Please note that your permitted activity is subject to a compliance inspection by an U.S. Army Corps of Engineers representative. If you fail to comply with this permit you are subject to permit suspension, modification, or revocation.

I hereby certify that the work authorized by the above referenced permit was completed in accordance with the terms and conditions of the above referenced permit, and any required mitigation was completed in accordance with the permit conditions.

_____ _____

Signature of Permittee ***Date***

_____ _____

Printed Name **Date of Work Completion**

( ) _____ ( ) _____

Telephone Number ***Telephone Number***

Corps of Engineers Permit No. NAE-2009-00514
Permit Special Conditions Resulting From
Formal Endangered Species Act Consultation
With US Fish & Wildlife Service
(Reference USFWS Biological Opinion dated "June 19, 2009")

1. Maine DOT shall hold a pre-construction meeting for each project with appropriate Maine DOT Environmental Office staff, other Maine DOT staff, and the Maine DOT construction crew (as practicable) or the contractor(s), to review all procedures and requirements for avoiding and minimizing impacts to Atlantic salmon and to emphasize the importance of these measures for protecting salmon and their habitat. Corps staff will attend these meetings as practicable.

2. Maine DOT and their contractors will minimize the potential for impacts to Atlantic salmon and their habitat by conducting all instream work (which includes the installation and removal of cofferdams, as well as other activities) according to the work windows specified in Table 1 (page 6) of the US Fish & Wildlife Service Biological Opinion dated "June 19, 2009".

3. Maine DOT and their contractors will minimize the potential for impacts to Atlantic salmon and their habitat by conducting all construction activities for each project in accordance with the Maine DOT-approved Soil Erosion and Water Pollution Control Plan.

4. A fish evacuation plan must be implemented by appropriate Maine DOT staff during construction and dewatering of all cofferdams to carefully remove juvenile Atlantic salmon from the work area.

5. All Atlantic salmon mortalities from electrofishing or other activities will be reported to the USFWS (Wende Mahaney at 827-5938, Ext. 20; FAX 827-6099; or wende_mahaney@fws.gov) and NMFS (Jeff Murphy at 866-7379; FAX 866-7342; or jeff.murphy@noaa.gov) within 48 hours of occurrence. Mortalities shall be immediately preserved (refrigerate or freeze) for delivery to the NMFS office in Orono, Maine (contact Jeff Murphy at 866-7379 to arrange for delivery).

6. To minimize the effects of entrainment and impingement from diversion pumps, Maine DOT and their contractors shall use a screen on all intake hoses with a maximum mesh size of 6.35 mm. Furthermore, Maine DOT shall insure that the approach velocity to the intake hose does not exceed 0.24 m/sec. Intake hoses shall be regularly monitored while pumping to minimize adverse effects to Atlantic salmon.

7. The Maine DOT or their contractor will follow a Spill Prevention Control and Countermeasure Plan designed to avoid effects to rivers and streams from hazardous materials associated with construction activities. This plan will be approved by appropriate Maine DOT Environmental Office staff prior to the start of construction and then carefully enforced throughout the duration of each construction project.

8. To minimize adverse effects to Atlantic salmon and ensure that salmon and other fish species are able to pass through rehabilitated culverts and that stream habitat is not fragmented, Maine DOT will monitor the efficacy of fish passage through all culverts rehabilitated by invert lining or slip lining, regardless of whether or not fish passage structures are installed (e.g., weirs). Monitoring reports shall be submitted to USFWS (Attn: Wende Mahaney, 1168 Main Street, Old Town, ME 04468) with a copy to the Corps (Attn: Jay Clement, Maine Project Office, 675 Western Avenue #3, Manchester, ME 04351).

Monitoring will be completed at the following projects: 1) Farmington PIN 15640, 2) Farmington PIN 12693, and 3) Ebeemee PIN 17088. Monitoring will follow the procedures outlined in Appendix D, except as modified below. Monitoring will be completed during the first, third, and fifth years after construction during appropriate stream flows as discussed in Appendix D. Monitoring reports will be submitted in a timely fashion that will allow for the planning and implementation of any necessary instream construction work to correct identified fish passage problems during the following July 15 to September 30 work window (unless another work window is approved by USFWS). After the fifth year monitoring report is evaluated, the USFWS will determine the need for any further monitoring or corrective measures.

9. To minimize adverse effects to Atlantic salmon and ensure that salmon and other fish species are able to pass through replacement culverts and that stream habitat is not fragmented, Maine DOT will monitor the efficacy of fish passage through the following culvert replacement projects: 1) Prentiss Township (PIN 16742); 2) Meddybemps (No PIN); 3) Weston (PIN 15968); and 4) Bradley (PIN 16687). Electro-fishing is not necessary at Prentiss unless indirect monitoring indicates there may be problems with fish passage through the new structure.

Monitoring will follow the procedures outlined in Appendix D, except as modified below. Monitoring will be completed during the first, third, and fifth years after construction during appropriate stream flows. Monitoring reports will be submitted in a timely fashion that will allow for the planning and implementation of any necessary instream construction work to correct identified fish passage problems during the following July 15 to September 30 work window (unless another work window is approved by USFWS). After the fifth year monitoring report is evaluated, the USFWS will determine the need for any further monitoring or corrective measures.

10. All cofferdams shall be removed from the stream immediately following completion of construction, allowing for minor delays due to high stream flows following heavy precipitation, so that fish and other aquatic life passage is not unnecessarily restricted. If a project is not completed but there will be substantial delays in construction, cofferdams will need to be at least partially removed to allow unobstructed passage of Atlantic salmon until construction resumes.

11. If any project proposes to use blasting, Maine DOT will submit a project-specific blasting plan to USFWS for review and approval prior to any blasting activities. This plan must demonstrate that blasting will not produce overpressure in surrounding waters that exceeds 100 kPa. These plans must be submitted at least 30 days before the anticipated blasting activities to allow for adequate review and approval by USFWS.

12. To minimize adverse effects to Atlantic salmon from pile driving, equipment operators shall conduct a few light "taps" on the pile prior to normal pile driving operations in an effort to scare Atlantic salmon and other fish away from the piles.

13. To minimize adverse effects to Atlantic salmon from water column noise produced by demolition of the existing bridge piers (likely with a hoe ram), pier demolition shall be conducted inside a cofferdam at the following projects: 1) Island Falls (PIN 15097), Oakfield (PIN 15630), and New Sharon (PIN 16719). The cofferdam does not need to be dewatered, but dewatering would serve to further reduce the amount of noise in the adjacent water column and minimize effects on Atlantic salmon.

14. To minimize adverse effects to Atlantic salmon, particularly physical injury or mortality, any piles larger than 61 cm (24 in) in diameter will be driven using one or more noise attenuation techniques. Such techniques can include (but are not limited to) an air bubble curtain and isolation of the piles within a cofferdam. Driving of piles with noise attenuation techniques shall meet the interim noise criteria of the FHWG (2008) of 206 dB_{Peak} and 187 dB SEL measured in the water at 10 m from pile.

15. Corps of Engineers staff shall carefully monitor the actions described in this opinion and document the level of incidental take to ensure that these projects are minimizing the take of Atlantic salmon. The Corps will provide the USFWS with an annual report summarizing the work done under this opinion and accounting for all cumulative take of Atlantic salmon, until such time as all projects are completed. When all construction projects are completed, the Corps shall submit a final report to the USFWS summarizing the total amount of incidental take from all projects.

Table 1. Projects being considered under the 2009 MEDOT bridge and culvert batched section 7 consultation.

No.	Project	PIN	Atlantic Salmon *DPS*	Atlantic Salmon *CH*	Stream/River	Watershed	Scope	Instream Work Window
	Rehabilitation (with/without external weirs)							
1	Farmington	15640	X	X	Abbott Brook	Sandy River	Slipline	July 15-Sept 30
2	Farmington	12693	X	X	Cascade Str.	Sandy River	Invert Line	July 15-Sept 30
3	Ebeemee		X	X	Stinking Brook	WB Pleasant	Slipline	July 15-Sept 30
4	Sebec	11487	X	X	Piscataquis	Repair	July 15-Sept 30	
	Replacement (culverts and boxes)							
5	Prentiss Twp	16742	X	X	Mud Brook	Mattawamkeag	Bridge Replacement	July 15-Sept 30
6	Meddybemps	No Pin	X	X	Unnamed Trib	Dennys River	Culvert Replacement	July 15-Sept 30
7	Weston	15968	X		Trout Brook	Mattawamkeag	Strut Replacement	July 15-Sept 30
	Bridge abutment work on stream banks (no in-channel piers)							
8	Winterport	16763	X	X	Marsh Stream	Penobscot	Bridge Replacement	July 15-Sept 30
9	New Sharon	16721	X	X	Fillibrown Brook	Sandy River	Bridge Replacement	July 15-Sept 30
	Bridge Pier(s) work with/without associated abutment work							
10	Whitneyville	16762	X	X	Machias River	Machias River	Pier Rehab	July 15-Sept 30
11	Bradley	16687	X	X	Great Works St	Penobscot	Bridge Replacement	July 15-Sept 30
12	Island Falls	15097	X	X	WB Mattawam	Mattawamkeag	Bridge Replacement	July 15-Sept 30
13	Bangor	15090	X	X	Meadow Brook	Penobscot	Bridge Replacement	Sept 1-May 1
14	Howland	15635	X	X	Piscataquis	Piscataquis	Bridge Replacement	Open
15	Oakfield	15630	X	X	Mattawamkeag	Mattawamkeag	Bridge Replacement	July 15-Sept 30
16	Norridgewock	6900.01	X	X	Kennebec	Kennebec	Bridge Replacement	Open
	Bridge Removal							
17	New Sharon	16719	X	X	Muddy Brook	Sandy River	Bridge Removal	July 15-Sept 30
	Linear Projects with Multiple Stream Crossings							
18	Sherman to Houlton	16819	X	X	Tributaries	Mattawamkeag	I-95 Reconstruction	July 15-Sept 30
19	T2R9-Veazie	15954	X	X	Unnamed Trib	Penobscot	I-95 Reconstruction	July 15-Sept 30
	New England Cottontail Project							
20	Falmouth	15094	New England Cottontail		Presumpscot R	Presumpscot R	Bridge Replacement	

Corps of Engineers Permit No. NAE-2009-00514
Permit Special Conditions Resulting From
Informal Endangered Species Act Consultation
With National Marine Fisheries Service
(Reference COE/Maine DOT Biological Assessment dated "March 2009")

1. The permittee shall implement Maine DOT Best Management Practices ("BMPs") for Erosion and Sedimentation Control for all work authorized by this permit.

2. All work authorized by this permit shall be designed in accordance with Maine DOT's 2008 Waterway and Wildlife Crossing Policy and Design Guide.

3. All projects authorized by this permit shall utilize works windows specified in Matrix 1 of the biological assessment ("BA") and as noted below:

a. Open Work Window - Mayfield Township, Garland, Waldoboro, Amherst, Canaan, Lincoln, Monroe, Ellsworth Rail Trail, Lisbon, Searsmont, Carmel, Lisbon-Sabattus, Ellsworth Rout 1A,

b. July 15 to September 30 Work Window – Brooks, Auburn Route 136, Old Town,

c. November 8 to April 9 Work Window - South Thomaston, Topsham, Sedgewick-Deer Isle,

d. Modified Work Window (July 15 to September 30 and November 8 to April 9) – Orland

e. Modified Work Window (June 1 to September 30) - Gardiner-Brunswick I-295

4. Any cofferdam constructed as part of the authorized project shall adhere to the specifications contained in Section 3.1 (Coffer Dam Descriptions) of the BA.

5. Any culvert installations authorized by this permit must adhere to the specifications contained in Section 3.1.2 (Replacement Projects) of the BA.

6. If any listed shortnose sturgeon or Atlantic salmon are encountered in the project areas of this permit, including during dewatering of cofferdams, all work must cease and NMFS shall be contacted immediately.

7. Within 90 days of permit issuance, the permittee must develop fish passage monitoring plans in consultation with NMFS, USFWS, and the Corps for any stream crossings requiring the installation of invert or slip-lined culverts. Instream work shall not begin on these projects until the monitoring plans have been approved by the Services and the Corps.

Maine DOT

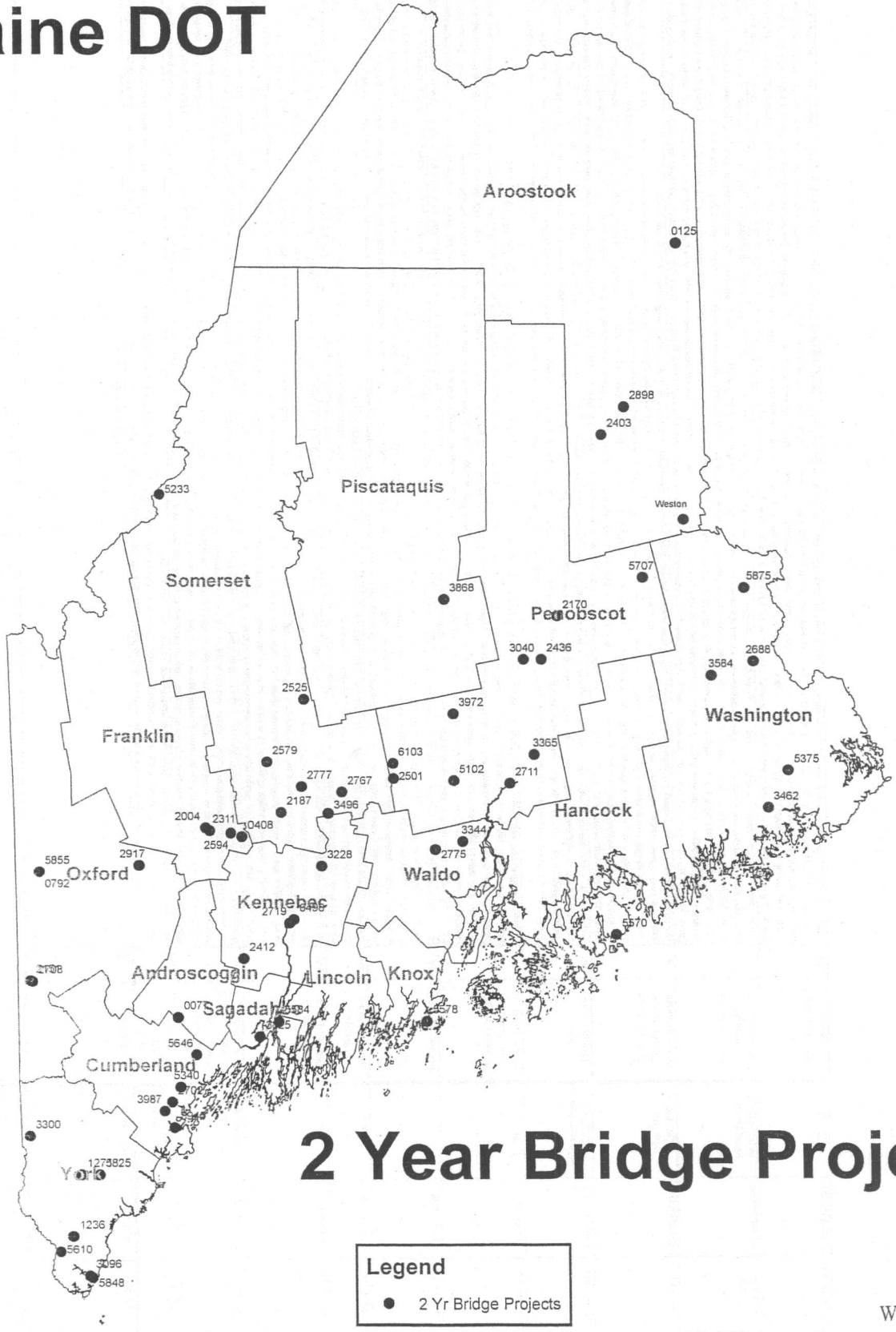

2 Year Bridge Projects

Legend

● 2 Yr Bridge Projects

N
W E
S

MAINE DOT
2 YEAR BRIDGE PROJECTS

SHEET 1 OF 7 JUNE 2009

Project Location					Project Information		
BR#	Location	Town	County	Bridge Name	Scope	On-Site Temporary Detour?	Construction Overview
0077	Old Danville Road	Auburn	Aroostook	ROYAL RIVER BRIDGE	Bridge Replacement (wider)	No	Demolish deck and rail with hydraulic hammer, remove debris from channel with clam-shell/hand labor. Remove exititing bridge beams with large excavator. Excavate for new footings and abutments behind existing abutments until it is time to demolish existing structure. Divert flow away from abutment (sandbags, Jersey barriers). Demolish abutment. Form/place footing and abutment, place riprap. Swap diversion to opposite abutment and repeat. Set beams, form/cast deck, install membrane, loam/seed, pave, stripe.
125	Richardson Road	Easton	Aroostook	PRESTILE STREAM #1	Bridge Culvert Replacement (Longer, possible removal?)	No	Place cofferdam upstream at narrowest point of stream (some clearing may be required to access cofferdam locations. Sandbags: compress substrate, minor sedimentation. Jersey barriers with sheet plastic: compress substrate, minor sedimentation) repeat downstream below outlet pool. Install diversion: most likely pump, install "sleeve" under work area to protect hose. Pump outlet installed so that discharge does not scour. Clean water pumped from above upstream cofferdam back into stream below downstream cofferdam. Dirty water within cofferdam is pumped to a cofferdam sedimentation basin. Pipe removed, new pipe/riprap installed in "dry" work area between cofferdams. The diversion pump system will be stopped and the upstream coffer dam will slowly be breached. First flush of dirty water captured by the "dirty water" pump and sent to cofferdam sedimentation basin. When the water behind downstream cofferdam is clean, that dam will be breached as well. The remainder of the upstream cofferdam and the diversion pump system will then be removed.
2403	Route 2	Island Falls	Aroostook	IRON	Bridge Replacement	No	Drive pile (H-pile or Pipe-pile, may require pre-excavation by crane with clam-shell) for temporary work trestle beside existing bridge. Drive pile to support "false-work" under structure to contain debris from deck/rail removal. Install barges, if sufficient depth of water, to contain bulk of pier demo. If there is not sufficient depth: remove center pier via open demolition with a hoe-ram from work trestle and/or blast; remove concrete from river with clam-shell. Cannot blast inside a cofferdam, generally destroys cofferdam. Repeat for other piers. Install cofferdams for new pier placement: sheet-pile, may require pre-excavation with clam-shell. Excavate for concrete seal within flooded cofferdam. Place seal concrete underwater in flooded cofferdam. Dewater cofferdam by pumping clean water into river. When water gets within a few feet of seal, pump to a cofferdam sediment basin to capture water with concrete sediment. Once dewatered, manually clean seal surface (shovels, and brooms. Once cleaned, the cofferdam can be allowed to flood at night and dewatered the next day by pumping overboard. Form, cast, and clean footing and pier in the "dry". Remove cofferdam. Repeat for other piers. Divert flow away from exiting abutments/riprap (sandbags/Jersey barriers), demo, excavate for footing, form, cast, and clean foo
2898	Main Street	Oakfield	Aroostook	Village	Bridge Replacement	No	Remove deck by saw cutting timbers and ripping with excavator, lift beams. Excavate for new footings and abutments behind existing abutments until it is time to demolish abutments.Excavate for new footings and abutments behind existing abutments until it is time to demolish existing structure. Divert flow away from abutment (sandbags, Jersey barriers). Demolish abutment. Form/place footing and abutment, place riprap. Swap diversion to opposite abutment and repeat. Set beams, form/cast deck, install membrane, loam/seed, pave, stripe.
	Bancroft Road	Weston	Aroostook		Strut Replacement	No	Place cofferdam upstream at narrowest point of stream (some clearing may be required to access cofferdam locations. Sandbags: compress substrate, minor sedimentation. Jersey barriers with sheet plastic: compress substrate, minor sedimentation) repeat downstream below outlet pool. Install diversion: most likely pump, install "sleeve" under work area to protect hose. Pump outlet installed so that discharge does not scour. Clean water pumped from above upstream cofferdam back into stream below downstream cofferdam. Dirty water within cofferdam is pumped to a cofferdam sedimentation basin. Pipe removed, new pipe/riprap installed in "dry" work area between cofferdams. The diversion pump system will be stopped and the upstream coffer dam will slowly be breached. First flush of dirty water captured by the "dirty water" pump and sent to cofferdam sedimentation basin. When the water behind downstream cofferdam is clean, that dam will be breached as well. The remainder of the upstream cofferdam and the diversion pump system will then be removed.
5340	Winn Road	Cumberland	Cumberland	RIDEOUT	Bridge Culvert Rehabilitation (Invert w/ wiers)	No	Place cofferdam upstream at narrowest point of stream (some cutting may be required to access cofferdam locations. Sandbags: compress substrate, minor sedimentation. Jersey barriers with sheet plastic: compress substrate, minor sedimentation) repeat downstream below outlet pool. Install diversion: most likely pump, install "sleeve" under work area to protect hose. Pump outlet installed so that discharge does not scour. Clean water pumped from above upstream cofferdam back into stream below downstream cofferdam. Dirty water within cofferdam is pumped to a cofferdam sedimentation basin. Place invert liner by spraying shot-crete, form and place external weirs, install riprap installed in "dry" work area between cofferdams. Block final weir outlet notch and use as containment for flushing of liner. The diversion pump system will stopped intermittently to provide flush water for liner. Flush water captured behind the last weir will be pumped to the cofferdam sedimentation basin until pH is tested to be within one pH of the receiving waters. The diversion pump system will be stopped and the upstream coffer dam will slowly be breached/removed. When the water behind downstream cofferdam is clean the downstream cofferdam will be removed.
2702	Route 26/100	Falmouth	Cumberland	RR and River CROSSING	Bridge Replacement	No	There appears to be very little in-stream work associated with this project. Pier replacement: Install cofferdams for new pier placement: sheet-pile, may require pre-excavation with clam-shell. Sandbags: compress substrate, minor sedimentation. Jersey barriers with sheet plastic: compress substrate, minor sedimentation). Excavate for concrete seal within dewatered cofferdam. Place seal concrete underwater in flooded cofferdam. Dewater cofferdam by pumping clean water into river. When water gets within a few feet of seal, pump to a cofferdam sediment basin to capture water with concrete sediment. Once dewatered, manually clean seal surface (shovels, and brooms. Once cleaned, the cofferdam can be allowed to flood at night and dewatered the next day by pumping overboard. Form, cast, and clean footing and pier in the "dry". Remove cofferdam.
5646	Hallowell Road/ Route 9	Pownal	Cumberland	POWNAL CENTER	Bridge Culvert Rehabilitation (Invert w/ wiers)	No	Place cofferdam upstream at narrowest point of stream (some cutting may be required to access cofferdam locations. Sandbags: compress substrate, minor sedimentation. Jersey barriers with sheet plastic: compress substrate, minor sedimentation) repeat downstream below outlet pool. Install diversion: most likely pump, install "sleeve" under work area to protect hose. Pump outlet installed so that discharge does not scour. Clean water pumped from above upstream cofferdam back into stream below downstream cofferdam. Dirty water within cofferdam is pumped to a cofferdam sedimentation basin. Place invert liner by spraying shot-crete, form and place external weirs, install riprap installed in "dry" work area between cofferdams. Block final weir outlet notch and use as containment for flushing of liner. The diversion pump system will stopped intermittently to provide flush water for liner. Flush water captured behind the last weir will be pumped to the cofferdam sedimentation basin until pH is tested to be within one pH of the receiving waters. The diversion pump system will be stopped and the upstream coffer dam will slowly be breached/removed. When the water behind downstream cofferdam is clean the downstream cofferdam will be removed.
3945	Route 1	South Portland	Cumberland	VETERANS MEMORIAL	**Design Build** Bridge Replacement *	??	Drive pile (H-pile or Pipe-pile, may require preexcavation by crane with clam-shell) for temporary work trestle beside existing bridge. Drive pile to support "false-work" under structure to contain demolition debris from deck/rail removal. Install barges, if suffcient depth of water, to contain bulk of pier demo. If there is not sufficent depth: remove center pier via open demolition with a ho-ram from work trestle or blast; remove concrete from river with clam-shell. Cannot blast inside a cofferdam, generally destoys cofferdam. Repeat for other piers. Install cofferdams for new pier placement: sheet-pile, may require pre-excavation with clam-shell. Excavate for concrete seal within dewatered cofferdam. Place seal concrete underwater in flooded cofferdam. Dewater cofferdam by pumping clean water into river. When water gets within a few feet of seal, pump to a cofferdam sediment basin to caputure water with concrete sediement. Once dewatered, manually clean seal surface (shovels, and brooms. Once cleaned, the cofferdam can be allowed to flood at night and dewatered the next day by pumping overboard. Form, cast, and clean footing and pier in the "dry". Remove cofferdam. Repeat for other piers. Divert flow away from exiting abutments/riprap (sandbags/Jersey barriers), demo, excavate for footing, form, cast, a
3987	E. Bridge Street	Westbrook	Cumberland	LITTLE	Arch with Natural Bottom	No	Place cofferdam upstream at narrowest point of stream (some cutting may be required to access cofferdam locations. Sandbags: compress substrate, minor sedimentation. Jersey barriers with sheet plastic: compress substrate, minor sedimentation) repeat downstream below outlet pool. Install diversion: most likely pump, install "sleeve" under work area to protect hose. Pump outlet installed so that discharge does not scour. Clean water pumped from above upstream cofferdam back into stream below downstream cofferdam. Dirty water within cofferdam is pumped to a cofferdam sedimentation basin. Remove culverts, form and cast footings, prepare streambed, and install arch in the "dry". The diversion pump system will be stopped and the upstream coffer dam will slowly be breached. First flush of dirty water captured by the "dirty water" pump and sent to cofferdam sedimentation basin. When the water behind downstream cofferdam is clean, that dam will be breached as well. The remainder of the upstream cofferdam and the diversion pump system will then be removed.

***Will apply "MaineDOT Special In-water Work Conditions" as standard practice.**

MAINE DOT
2 YEAR BRIDGE PROJECTS

SHEET 2 OF 7 JUNE 2009

Project Location					Project Information		
BR#	Location	Town	County	Bridge Name	Scope	On-Site Temporary Detour?	Construction Overview
2004	Route 4/27/43	Farmington	Franklin	Abbot	Slipline	No	Place cofferdam upstream at narrowest point of stream (some cutting may be required to access cofferdam locations. Sandbags: compress substrate, minor sedimentation. Jersey barriers with sheet plastic: compress substrate, minor sedimentation) repeat downstream below outlet pool. Install diversion: most likely pump, install "sleeve" under work area to protect hose. Pump outlet installed so that discharge does not scour. Clean water pumped from above upstream cofferdam back into stream below downstream cofferdam. Dirty water within cofferdam is pumped to a cofferdam sedimentation basin. Install liner and seal ends with only vent holes remaining. Place sheet plastic/tarps on streambed to capture any excess grout/spillage. Begin pumping grout (generally downstream to upstream). Can only place a limited amount of grout at a time as liner can float and move breaking the seals on the end. Operation needs to be closely monitored as unforeseen holes in pipe may lead to leakage. Leakage captured immediately downstream of pipe and removed from work area. Capture overflow when interstitial space is filled via vent holes. The diversion pump system will be stopped and the upstream coffer dam will slowly be breached/removed. When the water behind downstream cofferdam is clean the downstream coff
2311	Route 2/27	Farmington	Franklin	Gilbert Brook	Slipline	No	Place cofferdam upstream at narrowest point of stream (some cutting may be required to access cofferdam locations. Sandbags: compress substrate, minor sedimentation. Jersey barriers with sheet plastic: compress substrate, minor sedimentation) repeat downstream below outlet pool. Install diversion: most likely pump, install "sleeve" under work area to protect hose. Pump outlet installed so that discharge does not scour. Clean water pumped from above upstream cofferdam back into stream below downstream cofferdam. Dirty water within cofferdam is pumped to a cofferdam sedimentation basin. Install liner and seal ends with only vent holes remaining. Place sheet plastic/tarps on streambed to capture any excess grout/spillage. Begin pumping grout (generally downstream to upstream). Can only place a limited amount of grout at a time as liner can float and move breaking the seals on the end. Operation needs to be closely monitored as unforseen holes in pipe may lead to leakage. Leakage captured immediately downstream of pipe and removed from work area. Capture overflow when interstitial space is filled via vent holes. The diversion pump system will be stopped and the upstream coffer dam will slowly be breached/removed. When the water behind downstream cofferdam is clean the downstream coff
0408	Swan Road	New Sharon	Franklin	SWAN ROAD	Bridge Replacement (Possible Removal)	No	Remove deck by saw cutting timbers and ripping with excavator, lift beams. Excavate for new footings and abutments behind existing abutments until it is time to demolish abutments. Divert flow away from abutment (sandbags, Jersey barriers). Demolish abutment. Form/place footing and abutment, place riprap. Swap diversion to opposite abutment and repeat. Set beams, form/cast deck, install membrane, loam/seed, pave, stripe.
2594	Townway Road	New Sharon	Franklin	MUDDY BROOK	**Bridge Removal**	No	Drive pile to support "false-work" under structure to contain demolition debris generated by deck/rail removal. Remove deck via hydraulic hammer to expose piers. Install barges, if sufficient depth of water, to contain bulk of pier demo. If there is not sufficient depth: remove center pier via open demolition with a hydraulic hammer from work trestle or blast downs to mudline; remove concrete from river with clam-shell. Cannot blast inside a cofferdam, generally destroys cofferdam. Remove abutments by same means.
5570	Route 3	Mt Desert	Hancock	STANLEY BROOK	Bridge Replacement (Longer Span)	??	Remove deck by saw cutting timbers and ripping with excavator, lift beams. Excavate for new footings and abutments behind existing abutments until it is time to demolish abutments.Excavate for new footings and abutments behind existing abutments until it is time to demolish existing structure. Divert flow away from abutment (sandbags, Jersey barriers). Demolish abutment. Form/place footing and abutment, place riprap. Swap diversion to opposite abutment and repeat. Set beams, form/cast deck, install membrane, loam/seed, pave, stripe.
498	Blair Road	Augusta	Kennebec	BLAIR ROAD	Bridge Replacement	LAP	Remove pavement with excavator, demolish deck with hydraulic hammer and lift beams. Excavate for new footings and abutments behind existing abutments until it is time to demolish abutments. Excavate for new footings and abutments behind existing abutments until it is time to demolish existing structure. Divert flow away from abutment (sandbags, Jersey barriers). Demolish abutment. Form/place footing and abutment, place riprap. Swap diversion to opposite abutment and repeat. Set beams, form/cast deck, install membrane, loam/seed, pave, stripe.
2719	Route 100/201	Augusta	Kennebec	RIGGS	Bridge Replacement	No	Place cofferdam upstream at narrowest point of stream (some cutting may be required to access cofferdam locations. Sandbags: compress substrate, minor sedimentation. Jersey barriers with sheet plastic: compress substrate, minor sedimentation). Probably will not need a downstream cofferdam as there is a set of falls below structure. Install diversion: most likely pump, install "sleeve" under work area to protect hose. Pump outlet installed so that discharge does not scour. Clean water pumped from above upstream cofferdam back into stream below existing outlet. Dirty water within cofferdam is pumped to a cofferdam sedimentation basin. Complete Replacement work in the "dry". The diversion pump system will be stopped and the upstream coffer dam will slowly be breached.
2412	Cobbosseecontee Road	Monmouth	Kennebec	JOCK STREAM	Bridge Replacement	No	Install floating silt-boom up and downstream. Plug bridge deck drains. Saw cut deck capturing slurry. Lift bridge deck and rail with small crane/large excavator. Repeat on other span. Drill and blast pier. Remove debris with clam shell. Work behind existing abutments until it is time to demolish abutments. Contain abutment demolition and riprap placement behind floating silt boom. Demolish abutment and place riprap. Repeat other side.
3228	Garland Road	Winslow	Kennebec	MILE BROOK	**Design Build** Bridge Replacement	No	Drive pile (H-pile or Pipe-pile, may require pre-excavation by crane with clam-shell) to create a temporary work trestle beside existing bridge. Drive pile to support "false-work" under structure to contain demolition debris generated by deck/rail removal. Remove deck and rails. Clear and install access roads on both sides of stream. Place rock fill or crane mats to access piers. Hammer piers into manageable chunks, drill and blast footings, remove debris with excavator and trucks. Place fill to eliminate piers. Drive pile, form, cast footing and abutment (both sides). Span the rest of the stream. Set beams, form/cast deck, install membrane, loam/seed, pave, stripe.
5578	Island Road	South Thomaston	Knox	SPRUCE HEAD	Bridge Replacement	Yes	Build temporary abutments with sheetpile/riprap fill. Drive temporary piles (H-pile, pipe-pile) bents for temporary detour. Set old bridge beams and install precast concrete panels to create temporary bridge deck. Work tides and behind existing abutments until it is time to demolish abutments. Divert low flow with sandbags away from abutment/riprap. Demolish abutment and place riprap at low tide. Swap sandbags to opposite abutment and repeat.
2151	Shave Hill Road	Fryeburg	Oxford	CHARLES RIVER	Replacement or Bridge Removal	No	Drive pile to support "false-work" under structure to contain demolition debris generated by deck/rail removal. Remove deck and rails. Drive pile to create rail system. Install large roller system on existing bridge beams. Jack beams above existing abutments and roll beams onto shore to be dismantled. Divert flow with sandbags away from abutment/riprap. Demolish existing abutment. Build new abutment and place riprap in the "dry".
2708	McNeil Road	Fryeburg	Oxford	RED IRON	Bridge Replacement or Bridge Removal	No	Drive pile to support "false-work" under structure to contain demolition debris generated by deck/rail removal. Remove deck and rails. Surround pier with barges to access bearings on pier and contain debris. Disconnect bearings from beams, and lift beams with crane. Hammer concrete pier cap. Pull piles that make-up pier foundation. Divert flow with sandbags away from abutment/riprap. Demolish existing abutment. Build new abutment and place riprap in the "dry". Dive pile bent for new pier. Form, cast, and finish pier cap from barge. Set beams, form, place, and finish deck.
2917	Route 2	Mexico	Oxford	WEBB RIVER	Bridge Replacement (Longer Span)	No	Build Temporary abutments with Jersey barriers/concrete "waste" blocks. Line with geotextile and backfill with granular material. Set beams, place pre-cast concrete deck panels, and install temporary rail. Demolish deck and rail with hydraulic hammer, remove debris from channel with clam-shell/hand labor. Excavate for new footings and abutments behind existing abutments until it is time to demolish existing abutment. Divert flow away from abutment (sandbags, Jersey barriers). Demolish abutment. Form/place footing and abutment, place riprap. Swap diversion to opposite abutment and repeat. Set beams, form/cast deck, install membrane, loam/seed, pave, stripe.

***Will apply "MaineDOT Special In-water Work Conditions" as standard practice.**

MAINE DOT
2 YEAR BRIDGE PROJECTS

SHEET 3 OF 7 JUNE 2009

Project Location					Project Information		
BR#	Location	Town	County	Bridge Name	Scope	On-Site Temporary Detour?	Construction Overview
5855	Cobern Fields Road	Riley Twp	Oxford	BULL BRANCH	Replacement (Possible Rehabilitation)	No	Remove wooden deck cut saw cutting and removing with an excavator. Excavate for new footings and abutments behind existing abutments until it is time to demolish existing structure. Divert flow with sandbags away from abutment. Demolish abutment with hyraulic hammer. Form/place footing and abutment, place riprap. Swap sandbags to opposite abutment and repeat. Set beams, form/cast deck (possibly wood). Loam and seed.
0792	Cobern Fields Road	Riley Twp	Oxford	BULL BRANCH #2	Replacement (Possible Rehabilitation)	No	Remove wooden deck cut saw cutting and removing with an excavator. Excavate for new footings and abutments behind existing abutments until it is time to demolish existing structure. Divert flow with sandbags away from abutment. Demolish abutment with hyraulic hammer. Form/place footing and abutment, place riprap. Swap sandbags to opposite abutment and repeat. Set beams, form/cast deck (possibly wood). Loam and seed.
2711	Route 2	Bangor	Penobscot	Red	Bridge Replacement	No	Place cofferdam upstream at narrowest point of stream (some cutting may be required to access cofferdam locations. Sandbags: compress substrate, minor sedimentation. Jersey barriers with sheet plastic: compress substrate, minor sedimentation) repeat downstream below outlet pool. Install diversion: most likely pump, install "sleeve" under work area to protect hose; intake installed in sump surrounded by small plastic perforated riser filled with crushed stone to prevent clogging. Pump outlet installed so that discharge does not scour. Clean water pumped from above upstream cofferdam back into stream below downstream cofferdam. Dirty water within cofferdam is pumped to a cofferdam sedimentation basin. Bridge removed, new bridge/riprap installed in "dry" work area between cofferdams. The diversion pump system will be stopped and the upstream coffer dam will slowly be breached. First flush of dirty water captured by the "dirty water" pump and sent to cofferdam sedimentation basin. When the water behind downstream cofferdam is clean, that dam will be breached as well. The remainder of the upstream cofferdam and the diversion pump system will then be removed.
3365	Cram Street	Bradley	Penobscot	JENKINS (CRAM STREET)	Bridge Replacement (In-kind or possble span)	??	Place cofferdam upstream at narrowest point of stream (some cutting may be required to access cofferdam locations. Sandbags: compress substrate, minor sedimentation. Jersey barriers with sheet plastic: compress substrate, minor sedimentation) repeat downstream below outlet pool. Install diversion: most likely pump, install "sleeve" under work area to protect hose; intake installed in sump surrounded by small plastic perforated riser filled with crushed stone to prevent clogging. Pump outlet installed so that discharge does not scour. Clean water pumped from above upstream cofferdam back into stream below downstream cofferdam. Dirty water within cofferdam is pumped to a cofferdam sedimentation basin. Bridge removed, new bridge/riprap installed in "dry" work area between cofferdams. The diversion pump system will be stopped and the upstream coffer dam will slowly be breached. First flush of dirty water captured by the "dirty water" pump and sent to cofferdam sedimentation basin. When the water behind downstream cofferdam is clean, that dam will be breached as well. The remainder of the upstream cofferdam and the diversion pump system will then be removed.
5102	Fuller Road	Carmel	Penobscot	Norton	Bridge Replacement	No	Demolish deck and rail with hydraulic hammer, remove debris from channel with clam-shell/hand labor. Excavate for new footings and abutments behind existing abutments until it is time to demolish existing abutment. Divert flow away from abutment (sandbags, Jersey barriers). In this case, divert flow to one side of the center pier. Demolish abutment and place riprap. Swap sandbags to opposite side of center pier. Demolish abutment/place riprap. Install barges, if sufficient depth of water, to contain bulk of pier demo. If there is not sufficient depth: remove center pier via open demolition with a hydraulic hammer from work trestle or blast; remove concrete from resource with clam-shell. Set beams, form/cast deck, install membrane and wearing surface, loam and seed.
3972	Bradford Road	Charleston	Penobscot	RICHARDS	Bridge Culvert Rehabilitation (slip line or possible replacement)	No	Place cofferdam upstream at narrowest point of stream (some cutting may be required to access cofferdam locations. Sandbags: compress substrate, minor sedimentation. Jersey barriers with sheet plastic: compress substrate, minor sedimentation) repeat downstream below outlet pool. Install diversion: most likely pump, install "sleeve" under work area to protect hose. Pump outlet installed so that discharge does not scour. Clean water pumped from above upstream cofferdam back into stream below downstream cofferdam. Dirty water within cofferdam is pumped to a cofferdam sedimentation basin. Install liner and seal ends with only vent holes remaining. Place sheet plastic/tarps on streambed to capture any excess grout/spillage. Begin pumping grout (generally downstream to upstream). Can only place a limited amount of grout at a time as liner can float and move breaking the seals on the end. Operation needs to be closely monitored as unforeseen holes in pipe may lead to leakage. Leakage captured immediately downstream of pipe and removed from work area. Capture overflow when interstitial space is filled via vent holes. The diversion pump system will be stopped and the upstream coffer dam will slowly be breached/removed. When the water behind downstream cofferdam is clean the downstream coff
2436	Caribou Road	Enfield	Penobscot	Kimball	Bridge Replacement		Place cofferdam upstream at narrowest point of stream (some cutting may be required to access cofferdam locations. Sandbags: compress substrate, minor sedimentation. Jersey barriers with sheet plastic: compress substrate, minor sedimentation) repeat downstream below outlet pool. Install diversion: most likely pump, install "sleeve" under work area to protect hose; intake installed in sump surrounded by small plastic perforated riser filled with crushed stone to prevent clogging. Pump outlet installed so that discharge does not scour. Clean water pumped from above upstream cofferdam back into stream below downstream cofferdam. Dirty water within cofferdam is pumped to a cofferdam sedimentation basin. Pipe removed, new pipe/riprap installed in "dry" work area between cofferdams. The diversion pump system will be stopped and the upstream coffer dam will slowly be breached. First flush of dirty water captured by the "dirty water" pump and sent to cofferdam sedimentation basin. When the water behind downstream cofferdam is clean, that dam will be breached as well. The remainder of the upstream cofferdam and the diversion pump system will then be removed.
3040	Coffin Street/ Route 116	Howland	Penobscot	PISCATAQUIS	**Design Build** Bridge Replacement	No	Build temporary abutments with sheetpile/riprap fill. Drive pile (H-pile or Pipe-pile, may require pre-excavation by crane with clam-shell) to create a temporary work trestle beside existing bridge. Drive pile to create rail system. Install large roller system on existing bridge beams and shear mechanical connections between trusses and piers. Jack beams above existing abutments and roll trusses onto shore to be dismantled. Install cofferdams for new pier placement: sheet-pile, may require pre-excavation with clam-shell. Excavate for concrete seal within dewatered cofferdam. Place seal concrete underwater in flooded cofferdam. Dewater cofferdam by pumping clean water into river. When water gets within a few feet of seal, pump to a cofferdam sediment basin to capture water with concrete sediment. Once dewatered, manually clean seal surface (shovels, and brooms. Once cleaned, the cofferdam can be allowed to flood at night and dewatered the next day by pumping overboard. Form, cast, and clean footing and pier in the "dry". Remove cofferdam. Repeat for other piers. Set beams, form/cast deck, install membrane, pave, loam and seed.
2170	Route 2	Lincoln	Penobscot	COMBELLASSIE	Bridge Replacement w/ pipe or box	No	Place cofferdam upstream at narrowest point of stream (some cutting may be required to access cofferdam locations. Sandbags: compress substrate, minor sedimentation. Jersey barriers with sheet plastic: compress substrate, minor sedimentation) repeat downstream below outlet pool. Install diversion: most likely pump, install "sleeve" under work area to protect hose. Pump outlet installed so that discharge does not scour. Clean water pumped from above upstream cofferdam back into stream below downstream cofferdam. Dirty water within cofferdam is pumped to a cofferdam sedimentation basin. Demolish structure and remove debris. Undercut existing material, install new "bed", pipe/box and riprap installed in "dry" work area between cofferdams. The diversion pump system will be stopped and the upstream coffer dam will slowly be breached. First flush of dirty water captured by the "dirty water" pump and sent to cofferdam sedimentation basin. When the water behind downstream cofferdam is clean, that dam will be breached as well. The remainder of the upstream cofferdam and the diversion pump system will then be removed.
2501	Route 2	Newport	Penobscot	Main Street	Bridge Replacement	No	Install large pumping system. Drive sheetpile cofferdam upstream of structure. Dewater area between sheetpile cofferdam and permanent dam downstream. Use pumps to maintain downstream flow during low flows. Allow for flood events by pulling sheets if required. Demolish and construct in the dry.
6103	Moosehead Trail/ Route 7/11	Newport	Penobscot	MULLIGAN STREAM	Bridge Culvert Replacement	No	Place cofferdam upstream at narrowest point of stream (some cutting may be required to access cofferdam locations. Sandbags: compress substrate, minor sedimentation. Jersey barriers with sheet plastic: compress substrate, minor sedimentation) repeat downstream below outlet pool. Install diversion: most likely pump, install "sleeve" under work area to protect hose; intake installed in sump surrounded by small plastic perforated riser filled with crushed stone to prevent clogging. Pump outlet installed so that discharge does not scour. Clean water pumped from above upstream cofferdam back into stream below downstream cofferdam. Dirty water within cofferdam is pumped to a cofferdam sedimentation basin. Demolish structure and remove debris. Undercut existing material, install new "bed", pipe/box and riprap installed in "dry" work area between cofferdams. The diversion pump system will be stopped and the upstream coffer dam will slowly be breached. First flush of dirty water captured by the "dirty water" pump and sent to cofferdam sedimentation basin. When the water behind downstream cofferdam is clean, that dam will be breached as well. The remainder of the upstream cofferdam and the diversion pump system will then be removed.

***Will apply "MaineDOT Special In-water Work Conditions" as standard practice.**

Project Location					Project Information		
BR#	Location	Town	County	Bridge Name	Scope	On-Site Temporary Detour?	Construction Overview
5707	Center Street/ Route 171	Prentiss Twp	Penobscot	LITTLE MUD BROOK	Bridge Replacement (arch w/ longer sturcture)	No	Place cofferdam upstream at narrowest point of stream (some cutting may be required to access cofferdam locations. Sandbags: compress substrate, minor sedimentation. Jersey barriers with sheet plastic: compress substrate, minor sedimentation) repeat downstream below outlet pool. Install diversion: most likely pump, install "sleeve" under work area to protect hose; intake installed in sump surrounded by small plastic perforated riser filled with crushed stone to prevent clogging. Pump outlet installed so that discharge does not scour. Clean water pumped from above upstream cofferdam back into stream below downstream cofferdam. Dirty water within cofferdam is pumped to a cofferdam sedimentation basin. Demolish structure and remove debris. Undercut existing material, install new "bed", pipe/box and riprap installed in "dry" work area between cofferdams. The diversion pump system will be stopped and the upstream coffer dam will slowly be breached. First flush of dirty water captured by the "dirty water" pump and sent to cofferdam sedimentation basin. When the water behind downstream cofferdam is clean, that dam will be breached as well. The remainder of the upstream cofferdam and the diversion pump system will then be removed.
3868	Route 11	Ebeemee (T5 R9 NWP)	Piscataquis	Stinking Brook Bridge	Slipline w/ weirs	No	Place cofferdam upstream at narrowest point of stream (some cutting may be required to access cofferdam locations. Sandbags: compress substrate, minor sedimentation. Jersey barriers with sheet plastic: compress substrate, minor sedimentation) repeat downstream below outlet pool. Install diversion: most likely pump, install "sleeve" under work area to protect hose; intake installed in sump surrounded by small plastic perforated riser filled with crushed stone to prevent clogging. Pump outlet installed so that discharge does not scour. Clean water pumped from above upstream cofferdam back into stream below downstream cofferdam. Dirty water within cofferdam is pumped to a cofferdam sedimentation basin. Place invert liner by spraying shot-crete, form and place external weirs, install riprap installed in "dry" work area between cofferdams. Block final weir outlet notch and use as containment for flushing of liner. The diversion pump system will stopped intermittently to provide flush water for liner. Flush water captured behind the last weir will be pumped to the cofferdam sedimentation basin until pH is tested to be within one pH of the receiving waters. The diversion pump system will be stopped and the upstream coffer dam will slowly be breached/removed. When the water behind downstream cofferdam
3825	Foreside Road	Topsham	Sagadahoc	MUDDY RIVER	Bridge Substructure Rehabilitation	No	Build temporary access by placing Jersey barriers/driving sheets, lining with geotextile and placing stone fill. Drive pile on both sides of bridge and on either side of pier, slide beams under bridge creating temporary piers. Remove existing pier with chainsaw to mudline. Install sandbag/Jersey barrier around pier "footing". Excavate for new pier from access road. Place distribution slab (like a seal using excavated hole as "form" instead of sheetpile. Form/cast footing, form cast pier shaft and cap. Place riprap around new pier. Remove temporary piers. Build temporary access road with Jersey barriers, geotextile and granular fill. Divert flow away from abutments with sandbags or Jersey barriers and sheet plastic, remove spalling concrete with rock-hammers/small hydraulic hammer, form/cast abutment repairs, finish concrete, place riprap, and remove cofferdam.
5584	River Road/ Route 128	Woolwich	Sagadahoc	CHOPPS CREEK	Bridge Culvert Rehabilitation (Invert w/ wiers)	No	Place cofferdam upstream at narrowest point of stream (some cutting may be required to access cofferdam locations. Sandbags: compress substrate, minor sedimentation. Jersey barriers with sheet plastic: compress substrate, minor sedimentation) repeat downstream below outlet pool. Install diversion: most likely pump, install "sleeve" under work area to protect hose. Pump outlet installed so that discharge does not scour. Clean water pumped from above upstream cofferdam back into stream below downstream cofferdam. Dirty water within cofferdam is pumped to a cofferdam sedimentation basin. Place invert liner by spraying shot-crete, form and place external weirs, install riprap installed in "dry" work area between cofferdams. Block final weir outlet notch and use as containment for flushing of liner. The diversion pump system will stopped intermittently to provide flush water for liner. Flush water captured behind the last weir will be pumped to the cofferdam sedimentation basin until pH is tested to be within one pH of the receiving waters. The diversion pump system will be stopped and the upstream coffer dam will slowly be breached/removed. When the water behind downstream cofferdam is clean the downstream cofferdam will be removed.
2767	Route 2	Canaan	Somerset	SIBLEY POND	**Design Build** Bridge Replacement	Yes	Construct new structure on new alignment, leaving old structure as detour. Work from barges. Drive pipe piles to refusal for foundation. Install floating boom around piles, Air-lift to clean piles, install re-bar "cages", fill with concrete. Form, cast and finish pier caps, set, beams. Form/cast deck, install membrane, pave, loam and seed. Put traffic on new structure. Move barges under old structure to contain demolition debris. If the debris is falling from too great a height (can destroy a barge): plug bridge drains, saw cut into manageable pieces and lift out with crane. Pull existing piles if possible, if not, cut underwater by diver at mudline.
3496	Route 23	Canaan	Somerset	HASKELL	In-kind Bridge Replacement	No	Place cofferdam upstream at narrowest point of stream (some cutting may be required to access cofferdam locations. Sandbags: compress substrate, minor sedimentation. Jersey barriers with sheet plastic: compress substrate, minor sedimentation) repeat downstream below outlet pool. Install diversion: most likely pump, install "sleeve" under work area to protect hose. Pump outlet installed so that discharge does not scour. Clean water pumped from above upstream cofferdam back into stream below downstream cofferdam. Dirty water within cofferdam is pumped to a cofferdam sedimentation basin. Demolish structure and remove debris. Undercut existing material, install new "bed", pipe/box and riprap installed in "dry" work area between cofferdams. The diversion pump system will be stopped and the upstream coffer dam will slowly be breached. First flush of dirty water captured by the "dirty water" pump and sent to cofferdam sedimentation basin. When the water behind downstream cofferdam is clean, that dam will be breached as well. The remainder of the upstream cofferdam and the diversion pump system will then be removed.
2579	Route 201A/8/16	Embden	Somerset	MOORE	Bridge Replacement Staged Construction	No	Place cofferdam upstream at narrowest point of stream (some cutting may be required to access cofferdam locations. Sandbags: compress substrate, minor sedimentation. Jersey barriers with sheet plastic: compress substrate, minor sedimentation) repeat downstream below outlet pool. Install diversion: most likely pump, install "sleeve" under work area to protect hose. Pump outlet installed so that discharge does not scour. Clean water pumped from above upstream cofferdam back into stream below downstream cofferdam. Dirty water within cofferdam is pumped to a cofferdam sedimentation basin. Demolish structure and remove debris. Undercut existing material, install new "bed", pipe/box and riprap installed in "dry" work area between cofferdams. The diversion pump system will be stopped and the upstream coffer dam will slowly be breached. First flush of dirty water captured by the "dirty water" pump and sent to cofferdam sedimentation basin. When the water behind downstream cofferdam is clean, that dam will be breached as well. The remainder of the upstream cofferdam and the diversion pump system will then be removed.
2525	Route 16	Mayfield Twp	Somerset	MAYFIELD	Bridge Culvert Rehabilitation (Invert w/ wiers)	No	Place cofferdam upstream at narrowest point of stream (some cutting may be required to access cofferdam locations. Sandbags: compress substrate, minor sedimentation. Jersey barriers with sheet plastic: compress substrate, minor sedimentation) repeat downstream below outlet pool. Install diversion: most likely pump, install "sleeve" under work area to protect hose. Pump outlet installed so that discharge does not scour. Clean water pumped from above upstream cofferdam back into stream below downstream cofferdam. Dirty water within cofferdam is pumped to a cofferdam sedimentation basin. Place invert liner by spraying shot-crete, form and place external weirs, install riprap installed in "dry" work area between cofferdams. Block final weir outlet notch and use as containment for flushing of liner. The diversion pump system will stopped intermittently to provide flush water for liner. Flush water captured behind the last weir will be pumped to the cofferdam sedimentation basin until pH is tested to be within one pH of the receiving waters. The diversion pump system will be stopped and the upstream coffer dam will slowly be breached/removed. When the water behind downstream cofferdam is clean the downstream cofferdam will be removed.
2187	Route 2	Norridgewock	Somerset	Covered	Bridge Replacement	Yes	Build temporary abutments with sheetpile/riprap fill. Drive temporary piles (H-pile, pipe-pile) bents for temporary detour. Set old bridge beams and install precast concrete panels to create temporary bridge deck. Construct false-work under structure to be demolished to catch debris from deck. Demolish arches, deck and piers with hydraulic hammer. Remove demolition debris from ice via hand labor or small machine. Drill and blast piers. Remove rubble with a clam-shell when excavating for riprap. Install cofferdams for new pier placement: sheet-pile, may require pre-excavation with clam-shell. Excavate for concrete seal within dewatered cofferdam. Place seal concrete underwater in flooded cofferdam. Dewater cofferdam by pumping clean water into river. When water gets within a few feet of seal, pump to a cofferdam sediment basin to capture water with concrete sediment. Once dewatered, manually clean seal surface (shovels, and brooms. Once cleaned, the cofferdam can be allowed to flood at night and dewatered the next day by pumping overboard. Form, cast, and clean footing and pier in the "dry". Remove cofferdam. Repeat for other piers. Set beams, form/cast deck, install membrane, pave, loam and seed.

***Will apply "MaineDOT Special In-water Work Conditions" as standard practice.**

MAINE DOT
2 YEAR BRIDGE PROJECTS

SHEET 5 OF 7 JUNE 2009

Project Location					Project Information		
BR#	Location	Town	County	Bridge Name	Scope	On-Site Temporary Detour?	Construction Overview
5233	Route 201	Sandy Bay Twp	Somerset	KELLEY BROOK 2	Bridge Replacement	No	Place cofferdam upstream at narrowest point of stream (some cutting may be required to access cofferdam locations. Sandbags: compress substrate, minor sedimentation. Jersey barriers with sheet plastic: compress substrate, minor sedimentation) repeat downstream below outlet pool. Install diversion: most likely pump, install "sleeve" under work area to protect hose. Pump outlet installed so that discharge does not scour. Clean water pumped from above upstream cofferdam back into stream below downstream cofferdam. Dirty water within cofferdam is pumped to a cofferdam sedimentation basin. Demolish structure and remove debris. Undercut existing material, install new "bed", pipe/box and riprap installed in "dry" work area between cofferdams. The diversion pump system will be stopped and the upstream coffer dam will slowly be breached. First flush of dirty water captured by the "dirty water" pump and sent to cofferdam sedimentation basin. When the water behind downstream cofferdam is clean, that dam will be breached as well. The remainder of the upstream cofferdam and the diversion pump system will then be removed.
2777	Hilton Hill Road	Skowhegan	Somerset	SMITH POND (OLD)	Bridge Removal	No	Place barge/float under deck to contain debris and demolish with Hydraulic hammer to remove deck and rail. Lift beams off abutments. Excavate behind abutments, "crack" abutments with hydraulic hammer, pull pieces of abutment away from pond. Remove to water level, cover with riprap, final grading of slopes, loam and seed.
2775	Route 139	Monroe	Waldo	SMITH	Bridge Replacement w/ pipe or box (longer/deeper)	No	Place cofferdam upstream at narrowest point of stream (some cutting may be required to access cofferdam locations. Sandbags: compress substrate, minor sedimentation. Jersey barriers with sheet plastic: compress substrate, minor sedimentation) repeat downstream below outlet pool. Install diversion: most likely pump, install "sleeve" under work area to protect hose. Pump outlet installed so that discharge does not scour. Clean water pumped from above upstream cofferdam back into stream below downstream cofferdam. Dirty water within cofferdam is pumped to a cofferdam sedimentation basin. Demolish structure and remove debris. Undercut existing material, install new "bed", pipe/box and riprap installed in "dry" work area between cofferdams. The diversion pump system will be stopped and the upstream coffer dam will slowly be breached. First flush of dirty water captured by the "dirty water" pump and sent to cofferdam sedimentation basin. When the water behind downstream cofferdam is clean, that dam will be breached as well. The remainder of the upstream cofferdam and the diversion pump system will then be removed.
3344	Loggin Road	Winterport	Waldo	TIBBETTS	Bridge Replacement	No	After suspending false-work from existing structure, demolish deck and rail with hydraulic hammer and catch the debris on false work. Excavate for new footings and abutments behind existing abutments until it is time to demolish existing abutment. Divert flow away from abutment (sandbags/Jersey barriers). Demolish abutment with hydraulic hammer. Form/place footing and abutment, place riprap. Swap diversion to opposite abutment and repeat. Set beams, form/cast deck, install membrane, loam/seed, pave, stripe.
5875	Vanceboro Road/ Route 6	Codyville Plt	Washington	BEAVER BROOK	Bridge Culvert Rehabilitation (Invert w/ wiers)	No	Place cofferdam upstream at narrowest point of stream (some cutting may be required to access cofferdam locations. Sandbags: compress substrate, minor sedimentation. Jersey barriers with sheet plastic: compress substrate, minor sedimentation) repeat downstream below outlet pool. Install diversion: most likely pump, install "sleeve" under work area to protect hose. Pump outlet installed so that discharge does not scour. Clean water pumped from above upstream cofferdam back into stream below downstream cofferdam. Dirty water within cofferdam is pumped to a cofferdam sedimentation basin. Place invert liner by spraying shot-crete, form and place external weirs, install riprap installed in "dry" work area between cofferdams. Block final weir outlet notch and use as containment for flushing of liner. The diversion pump system will stopped intermittently to provide flush water for liner. Flush water captured behind the last weir will be pumped to the cofferdam sedimentation basin until pH is tested to be within one pH of the receiving waters. The diversion pump system will be stopped and the upstream coffer dam will slowly be breached/removed. When the water behind downstream cofferdam is clean the downstream cofferdam will be removed.
3584	Milford Street	Grand Lake Stream Plt	Washington	MILFORD STREET	Bridge Replacement (wider w/ longer span)	No	Demolish deck and rail with hydraulic hammer, remove debris from channel with clam-shell/hand labor. Excavate for new footings and abutments behind existing abutments until it is time to demolish existing abutment. Divert flow away from abutment (sandbags/Jersey barriers). Demolish abutment with hydraulic hammer. Form/place footing and abutment, place riprap. Swap diversion to opposite abutment and repeat. Set beams, form/cast deck, install membrane, loam/seed, pave, stripe.
2688	Calais Road, Route 1	Princeton	Washington	PRINCETON	Bridge Replacement (wider structure)	Most Likely	Build Temporary abutments with Jersey barriers/concrete "waste" blocks. Line with geotextile and backfill with granular material. Set beams, place pre-cast concrete deck panels, and install temporary rail. Excavate for new footings and abutments behind existing abutments until it is time to demolish existing structure. Divert flow with sandbags away from abutment. Demolish abutment. Form/place footing and abutment, place riprap. Swap sandbags to opposite abutment and repeat. Set beams, form/cast deck, install membrane, loam/seed, pave, stripe.
5375	Route 191	Twp 18 Ed Bpp	Washington	SOUTHERN INLET	Bridge Culvert Replacement (longer pipe or box)	No	Place cofferdam upstream at narrowest point of stream (some cutting may be required to access cofferdam locations. Sandbags: compress substrate, minor sedimentation. Jersey barriers with sheet plastic: compress substrate, minor sedimentation) repeat downstream below outlet pool. Install diversion: most likely pump, install "sleeve" under work area to protect hose. Pump outlet installed so that discharge does not scour. Clean water pumped from above upstream cofferdam back into stream below downstream cofferdam. Dirty water within cofferdam is pumped to a cofferdam sedimentation basin. Demolish structure and remove debris. Undercut existing material, install new "bed", pipe/box and riprap installed in "dry" work area between cofferdams. The diversion pump system will be stopped and the upstream coffer dam will slowly be breached. First flush of dirty water captured by the "dirty water" pump and sent to cofferdam sedimentation basin. When the water behind downstream cofferdam is clean, that dam will be breached as well. The remainder of the upstream cofferdam and the diversion pump system will then be removed.
3462	Route 1A	Whitneyville	Washington	MACHIAS RIVER	Bridge Substructure Rehabilitation	No	Build temporary abutments with sheetpile/granular fill. Drive pile (H-pile or Pipe-pile, may require pre-excavation by crane with clam-shell) to create a temporary work trestle(s) beside existing bridge. Remove spalling concrete with hand-held rock hammers. Remove debris by hand. Insert dowels in good concrete and build forms. Pump concrete from temporary trestle. Remove forms and finish concrete. Place riprap from temporary trestle(s).
3300	Acton Bridge Road	Acton	York	BALCH MILLS	In-kind Bridge Culvert Replacement	No	substrate, minor sedimentation) repeat downstream below outlet pool. Install diversion: most likely pump, install "sleeve" under work area to protect hose. Pump outlet installed so that discharge does not scour. Clean water pumped from above upstream cofferdam back into stream below downstream cofferdam. Dirty water within cofferdam is pumped to a cofferdam sedimentation basin. Demolish structure and remove debris. Undercut existing material, install new "bed", pipe/box and riprap installed in "dry" work area between cofferdams. The diversion pump system will be stopped and the upstream coffer dam will slowly be breached. First flush of dirty water captured by the "dirty water" pump and sent to cofferdam sedimentation basin. When the water behind downstream cofferdam is clean, that dam will be breached as well. The remainder of the upstream cofferdam and the diversion pump system will then be removed.
1271	Back Road	Alfred	York	NUTTER'S	Bridge Replacement (wider w/ longer span)	No	Demolish deck and rail with hydraulic hammer, remove debris from channel with clam-shell/hand labor. Excavate for new footings and abutments behind existing abutments until it is time to demolish existing abutment. Divert flow away from abutment (sandbags/Jersey barriers). Demolish abutment with hydraulic hammer. Form/place footing and abutment, place riprap. Swap diversion to opposite abutment and repeat. Set beams, form/cast deck, install membrane, loam/seed, pave, stripe.
5825	Alfred Road/ Route 111	Lyman	York	KENNEBUNK RIVER	Bridge Culvert Rehabilitation (Invert w/ wiers)	No	Place cofferdam upstream at narrowest point of stream (some cutting may be required to access cofferdam locations. Sandbags: compress substrate, minor sedimentation. Jersey barriers with sheet plastic: compress substrate, minor sedimentation) repeat downstream below outlet pool. Install diversion: most likely pump, install "sleeve" under work area to protect hose. Pump outlet installed so that discharge does not scour. Clean water pumped from above upstream cofferdam back into stream below downstream cofferdam. Dirty water within cofferdam is pumped to a cofferdam sedimentation basin. Place invert liner by spraying shot-crete, form and place external weirs, install riprap installed in "dry" work area between cofferdams. Block final weir outlet notch and use as containment for flushing of liner. The diversion pump system will stopped intermittently to provide flush water for liner. Flush water captured behind the last weir will be pumped to the cofferdam sedimentation basin until pH is tested to be within one pH of the receiving waters. The diversion pump system will be stopped and the upstream coffer dam will slowly be breached/removed. When the water behind downstream cofferdam is clean the downstream cofferdam will be removed.

***Will apply "MaineDOT Special In-water Work Conditions" as standard practice.**

MAINE DOT
2 YEAR BRIDGE PROJECTS

SHEET 6 OF 7 JUNE 2009

Project Location					Project Information		
BR#	Location	Town	County	Bridge Name	Scope	On-Site Temporary Detour?	Construction Overview
1236	Great Hill Road	South Berwick	York	GREAT HILL BR	Replacement (longer span w/ slight re-alignment)	??	Remove wooden deck cut saw cutting and removing with an excavator. Excavate for new footings and abutments behind existing abutments until it is time to demolish existing structure. Divert flow with sandbags away from abutment. Demolish abutment with hyraulic hammer.Form/place footing and abutment, place riprap. Swap diversion to opposite abutment and repeat. Set beams, form/cast deck, install membrane, loam/seed, pave, stripe.
5610	Dow Highway/ Route 236	South Berwick	York	GREAT WORKS RIVER	Bridge Replacement	No	Place barge/float under deck to contain debris and demolish with Hydraulic hammer to remove deck and rail. Lift beams off abutments. Excavate behind abutments, "crack" abutments with hydraulic hammer, pull pieces of abutment away from River down just above water level. Divert flow with sandbags away from remaining abutment/footing. Demolish abutment/footing. Form/place footing and abutment, place riprap. Swap sandbags to opposite abutment and repeat. Set beams, form/cast deck, install membrane, loam/seed, pave, stripe.
3096	Organug Road	York	York	SEWALLS	Bridge Rehabilitation	No	Build temporary access by placing Jersey barriers/driving sheets, lining with geotextile and placing stone fill. Drive pile on both sides of bridge and on either side of pier, slide beams under bridge creating temporary piers. Remove existing pier with chainsaw to mudline. Install sandbag/Jersey barrier around pier "footing". Excavate for new pier from access road. Place distribution slab (like a seal using excavated hole as "form" instead of sheetpile. Form/cast footing, form cast pier shaft and cap. Place riprap around new pier. Remove temporary piers. Build temporary access road with Jersey barriers, geotextile and granular fill. Divert flow away from abutments with sandbags or Jersey barriers and sheet plastic, remove spalling concrete with rock-hammers/small hydraulic hammer, form/cast abutment repairs, finish concrete, place riprap, and remove cofferdam.
5848	Route 103	York	York	Station 34	Bridge Replacement with Box Culvert	No	Place cofferdam upstream at narrowest point of stream (some cutting may be required to access cofferdam locations. Sandbags: compress substrate, minor sedimentation. Jersey barriers with sheet plastic: compress substrate, minor sedimentation) repeat downstream below outlet pool. Install diversion: most likely pump, install "sleeve" under work area to protect hose. Pump outlet installed so that discharge does not scour. Clean water pumped from above upstream cofferdam back into stream below downstream cofferdam. Dirty water within cofferdam is pumped to a cofferdam sedimentation basin. Demolish structure and remove debris. Undercut existing material, install new "bed", pipe/box and riprap installed in "dry" work area between cofferdams. The diversion pump system will be stopped and the upstream coffer dam will slowly be breached. First flush of dirty water captured by the "dirty water" pump and sent to cofferdam sedimentation basin. When the water behind downstream cofferdam is clean, that dam will be breached as well. The remainder of the upstream cofferdam and the diversion pump system will then be removed.

*Will apply "MaineDOT Special In-water Work Conditions" as standard practice.

MAINE DOT
2 YEAR BRIDGE PROJECTS

SHEET 7 OF 7 JUNE 2009

MEMORANDUM OF AGREEMENT

AMONG THE UNITED STATES ARMY CORPS OF ENGINEERS, NEW ENGLAND DISTRICT,

THE MAINE STATE HISTORIC PRESERVATION OFFICER,

AND THE ADVISORY COUNCIL ON HISTORIC PRESERVATION

REGARDING VARIOUS BRIDGE PROJECTS WITHIN THE STATE OF MAINE

WHEREAS, the Maine Department of Transportation (MaineDOT), is proposing a variety of bridge projects which will be processed under a single United States Army Corps of Engineers (ACOE) Permit; and

WHEREAS, the projects are located throughout the state and, cumulatively, cover a large land area; and

WHERAS, the bridge projects are part of the 2010-2011 Maine DOT Work Plan and are listed in Attachment 1; and

WHEREAS, the ACOE and MaineDOT will establish an Area of Potential Effect for each specific project in accordance with 36 CFR Section 800.16(d); and

WHEREAS, the ACOE has determined that some of these projects may have an effect on National Register (NR)-listed or -eligible architectural and archaeological resources and has consulted with the Maine State Historic Preservation Officer, referred herein as the Maine Historic Preservation Commission (MHPC), pursuant to 36 CFR Part 800, regulations implementing Section 106 of the National Historic Preservation Act (16 U.S.C. Section 470(f); and

WHEREAS, the ACOE and the MHPC have identified the likely presence of architectural and archeological properties within the cumulative area of potential effects through background research, consultation and an appropriate level of field investigation; and

WHEREAS, the ACOE is consulting with the Aroostook Band of Micmacs, the Houlton Band of Maliseet Indians, the Passamaquoddy Tribe, and the Penobscot Nation in accordance with 36 CFR Section 800.3 (f)(2) and will apprise them of any findings; and

WHEREAS, the scope and limits of these projects still remain under investigation; and

WHEREAS, 36 CFR Section 800.4(b)(2) allows for phased identification and evaluation of historic properties where alternatives under consideration consist of corridors or large land areas, and allows the agency official to defer final identification and evaluation of historic properties if it is specifically provided for in a memorandum of agreement executed pursuant to

Section 800.6, a programmatic agreement executed pursuant to Section 800.14 (b), or the documents used by an agency official to comply with the National Environmental Policy Act pursuant to Section 800.8; and

WHEREAS, the ACOE has consulted with MaineDOT regarding the effects of the undertaking on potential National Register-eligible resources and has invited them to sign this MOA as a concurring party; and

WHEREAS, in accordance with 36 CFR Section 800.6(a)(1), the ACOE has notified the Advisory Council on Historic Preservation (Council) of the potential for an adverse effect determination. ACOE has invited the Council to consult and the Council has chosen not to participate in the consultation pursuant to 36 CFR Section 800.6(a)(1)(iii);

NOW, THEREFORE, the ACOE and the MHPC agree that the undertaking shall be implemented in accordance with the following stipulations in order to take into account the effect of the undertaking on potential historic properties.

STIPULATIONS

The ACOE shall ensure that the following measures are carried out:

I. For each project, the MaineDOT shall conduct identification and evaluation of architectural and archeological properties in accordance with 36 CFR Section 800.4(b)(1) and (c), as the limits and scopes of that project are refined, and in accordance with the provisions of the current Statewide Programmatic Agreement for Federal Aid Highway and Federal Transit Programs in Maine.

II. Identification (Phase I) archeological field investigations shall begin during the spring of 2009, followed as needed by eligibility determination (Phase II) investigations. Archaeological investigations shall be directed by archaeologist(s) meeting the Maine State Historic Preservation Officer's Standards for Archaeological Work in Maine (Chapter 812[94-089]), and meeting the Secretary of the Interior's Standards (36 CFR 61).

III. In order to ensure that historic properties are fully considered during the project development phase, Section 106 consultation must be concluded, prior to the approval of any applicable National Environmental Policy Act and Section 4(f) documentation. Resolution of any adverse effects shall be conducted in accordance with 36 CFR Section 800.6 which seeks ways to avoid, minimize or mitigate adverse effects. Any disputed determinations shall be processed in accordance with Stipulation VII.

IV. DURATION. This agreement will be null and void if its terms are not carried out within five (5) years from the date of its execution. Prior to such time, The ACOE may consult with the other signatories to reconsider the terms of the agreement and amend in accordance with

Stipulation VIII below.

V. POST-REVIEW DISCOVERIES. If potential historic properties are discovered or unanticipated effects on historic properties found, the signatory parties shall consult in accordance with 36 CFR Section 800.6(c)(6).

VI. MONITORING AND REPORTING. Each year following the execution of this agreement until it expires or is terminated, MaineDOT shall provide all parties to this agreement a summary report detailing work undertaken pursuant to its terms. Such report shall include any scheduling changes proposed, any problems encountered, and any disputes and objections received in MaineDOT's efforts to carry out the terms of this agreement. Failure to provide such summary report may be considered noncompliance with the terms of this MOA pursuant to Stipulation VIII, below.

VII. DISPUTE RESOLUTION. Should any signatory to this Agreement object within 30days to any actions proposed or carried out pursuant to this agreement, the ACOE shall consult with all parties to resolve the objection. If the ACOE determines that the objection cannot be resolved, the ACOE will request that the Council join consultation pursuant to 36 CFR Part 800.6(b). Any Council comment provided in response to such a request will be taken into account by the ACOE in accordance with 36 CFR Part 800.6(c)(2) with reference only to the subject of the dispute. The ACOE's responsibility to carry out all actions under this agreement that are not the subjects of the dispute will remain unchanged.

VIII. AMENDMENTS AND NONCOMPLIANCE. If any signatory to this MOA, including any invited signatory, determines that its terms will not or cannot be carried out or that an amendment to its terms must be made, that party shall immediately consult with the other parties to develop an amendment to this MOA pursuant to 36 CFR Sections 800.6(c)(7) and 800.6(c)(8). The amendment will be effective on the date a copy signed by all of the original signatories is filed with the Council. If the signatories cannot agree to appropriate terms to amend the MOA, any signatory may terminate the agreement in accordance with Stipulation IX, below.

IX. TERMINATION. If an MOA is not amended following the consultation set out in Stipulation IX, it may be terminated by any signatory or invited signatory. Within 30 days following termination, the ACOE shall notify the signatories if it will initiate consultation to execute an MOA with the signatories under 36 CFR Section 800.6(c)(1) or request the comments of the Council under 36 CFR Section 800.7(a) and proceed accordingly.

Execution of this Memorandum of Agreement by ACOE and MHPC, and implementation of its terms, are evidence that ACOE has afforded MHPC an opportunity to comment on this project and its effects on historic properties, and ACOE has taken into account the effects of the undertaking on historic properties.

NEW ENGLAND DISTRICT, U.S. ARMY CORPS OF ENGINEERS

By: _____ 2/26/09 Date:
Heather L. Sullivan, Acting Chief, Regulatory Division

for

MAINE STATE HISTORIC PRESERVATION OFFICER

By: _____ Date: 2/2/09
Earle G. Shettleworth, Jr., State Historic Preservation Officer

CONCURRENCE by Maine Dept. of Transportation

By: _____ 2-5-09 Date:
David A. Cole, Commissioner

NOTIFICATION OF ADMINISTRATIVE APPEAL OPTIONS AND PROCESS AND REQUEST FOR APPEAL

Applicant: Maine Dept. of Transportation		File Number: NAE-2009-00514	Date:
Attached is:			See Section below
	INITIAL PROFFERED PERMIT (Standard Permit or Letter of permission)		A
X	PROFFERED PERMIT (Standard Permit or Letter of permission)		B
	PERMIT DENIAL		C
	APPROVED JURISDICTIONAL DETERMINATION		D
X	PRELIMINARY JURISDICTIONAL DETERMINATION		E

SECTION I - The following identifies your rights and options regarding an administrative appeal of the above decision. Additional information may be found at http://usace.army.mil/inet/functions/cw/cecwo/reg or Corps regulations at 33 CFR Part 331.

A: INITIAL PROFFERED PERMIT: You may accept or object to the permit.

- ACCEPT: If you received a Standard Permit, you may sign the permit document and return it to the District Engineer for final authorization in care of "Regulatory Division." If you received a Letter of Permission (LOP), you may accept the LOP and your work is authorized. Your signature on the Standard Permit or acceptance of the LOP means that you accept the permit in its entirety, and waive all rights to appeal the permit, including its terms and conditions, and approved jurisdictional determinations associated with the permit.

- OBJECT: If you object to the permit (Standard or LOP) because of certain terms and conditions therein, you may request that the permit be modified accordingly. You must complete Section II of this form and return the form to the District Engineer, in care of the Chief, Regulatory Division, as specified in the last paragraph of the coverletter. Your objections must be received within 60 days of the date of this notice, or you will forfeit your right to appeal the permit in the future. Upon receipt of your letter, the District Engineer will evaluate your objections and may: (a) modify the permit to address all of your concerns, (b) modify the permit to address some of your objections, or (c) not modify the permit having determined that the permit should be issued as previously written. After evaluating your objections, the District Engineer will send you a proffered permit for your reconsideration, as indicated in Section B below.

B: PROFFERED PERMIT: You may accept or appeal the permit

- ACCEPT: If you received a Standard Permit, you may sign the permit document and return it to the District Engineer for final authorization in care of "Regulatory Division." If you received a Letter of Permission (LOP), you may accept the LOP and your work is authorized. Your signature on the Standard Permit or acceptance of the LOP means that you accept the permit in its entirety, and waive all rights to appeal the permit, including its terms and conditions, and approved jurisdictional determinations associated with the permit.
- APPEAL: If you choose to decline the proffered permit (Standard or LOP) because of certain terms and conditions therein, you may appeal the declined permit under the Corps of Engineers Administrative Appeal Process by completing Section II of this form and sending the form to the Division Engineer in care of: Michael G. Vissichelli, Administrative Appeals Review Officer, North Atlantic Division, Corps of Engineers, North Atlantic Fort Hamilton Military Community, Bldg. 301, General Lee Avenue, Brooklyn, NY 11252-6700 Telephone: (718) 765-7163, E-mail: Michael.G.Vissichelli@usace.army.mil The Division Engineer must receive this form within 60 days of the date of this notice.
-

- C: PERMIT DENIAL: You may appeal the denial of a permit under the Corps of Engineers Administrative Appeal Process by completing Section II of this form and sending the form to the Division Engineer in care of: Michael G. Vissichelli, Administrative Appeals Review Officer, North Atlantic Division, Corps of Engineers, North Atlantic Fort Hamilton Military Community, Bldg. 301, General Lee Avenue, Brooklyn, NY 11252-6700 Telephone: (718) 765-7163, E-mail: Michael.G.Vissichelli@usace.army.mil The Division Engineer must receive this form within 60 days of the date of this notice.

D: APPROVED JURISDICTIONAL DETERMINATION: You may accept or appeal the approved JD or provide new information.

- ACCEPT: You do not need to notify the Corps to accept an approved JD. Failure to notify the Corps within 60 days of the date of this notice means that you accept the approved JD in its entirety, and waive all rights to appeal the approved JD.
- APPEAL: If you disagree with the approved JD, you may appeal the approved JD under the Corps of Engineers Administrative Appeal Process by completing Section II of this form and sending the form to the Division Engineer in care of: Michael G. Vissichelli, Administrative Appeals Review Officer, North Atlantic Division, Corps of Engineers, North Atlantic Fort Hamilton Military Community, Bldg. 301, General Lee Avenue, Brooklyn, NY 11252-6700 Telephone: (718) 765-7163, E-mail: Michael.G.Vissichelli@usace.army.mil The Division Engineer must receive this form within 60 days of the date of this notice.

E: PRELIMINARY JURISDICTIONAL DETERMINATION: You do not need to respond to the Corps regarding the preliminary JD. The Preliminary JD is not appealable. If you wish, you may request an approved JD (which may be appealed), by contacting the Corps district at the address below for further instruction. Also you may provide new information for further consideration by the Corps to reevaluate the JD.

SECTION II - REQUEST FOR APPEAL or OBJECTIONS TO AN INITIAL PROFFERED PERMIT

REASONS FOR APPEAL OR OBJECTIONS: (Describe your reasons for appealing the decision or your objections to an initial proffered permit in clear concise statements. You may attach additional information to this form to clarify where your reasons or objections are addressed in the administrative record.)

ADDITIONAL INFORMATION: The appeal is limited to a review of the administrative record, the Corps memorandum for the record of the appeal conference or meeting, and any supplemental information that the review officer has determined is needed to clarify the administrative record. Neither the appellant nor the Corps may add new information or analyses to the record. However, you may provide additional information to clarify the location of information that is already in the administrative record.

POINT OF CONTACT FOR QUESTIONS OR INFORMATION:

If you have questions regarding this decision and/or the appeal process you may contact Ms. Ruth Ladd at:

Chief, Policy Analysis/Technical Support Branch
Corps of Engineers
696 Virginia Road
Concord, MA 01742 or by calling (978) 318-8818

RIGHT OF ENTRY: Your signature below grants the right of entry to Corps of Engineers personnel, and any government consultants, to conduct investigations of the project site during the course of the appeal process. You will be provided a 15-day notice of any site investigation, and will have the opportunity to participate in all site investigations.

_____ Signature of appellant or agent.	Date:	Telephone number:

Applicant Options with Initial/Proffered Permit

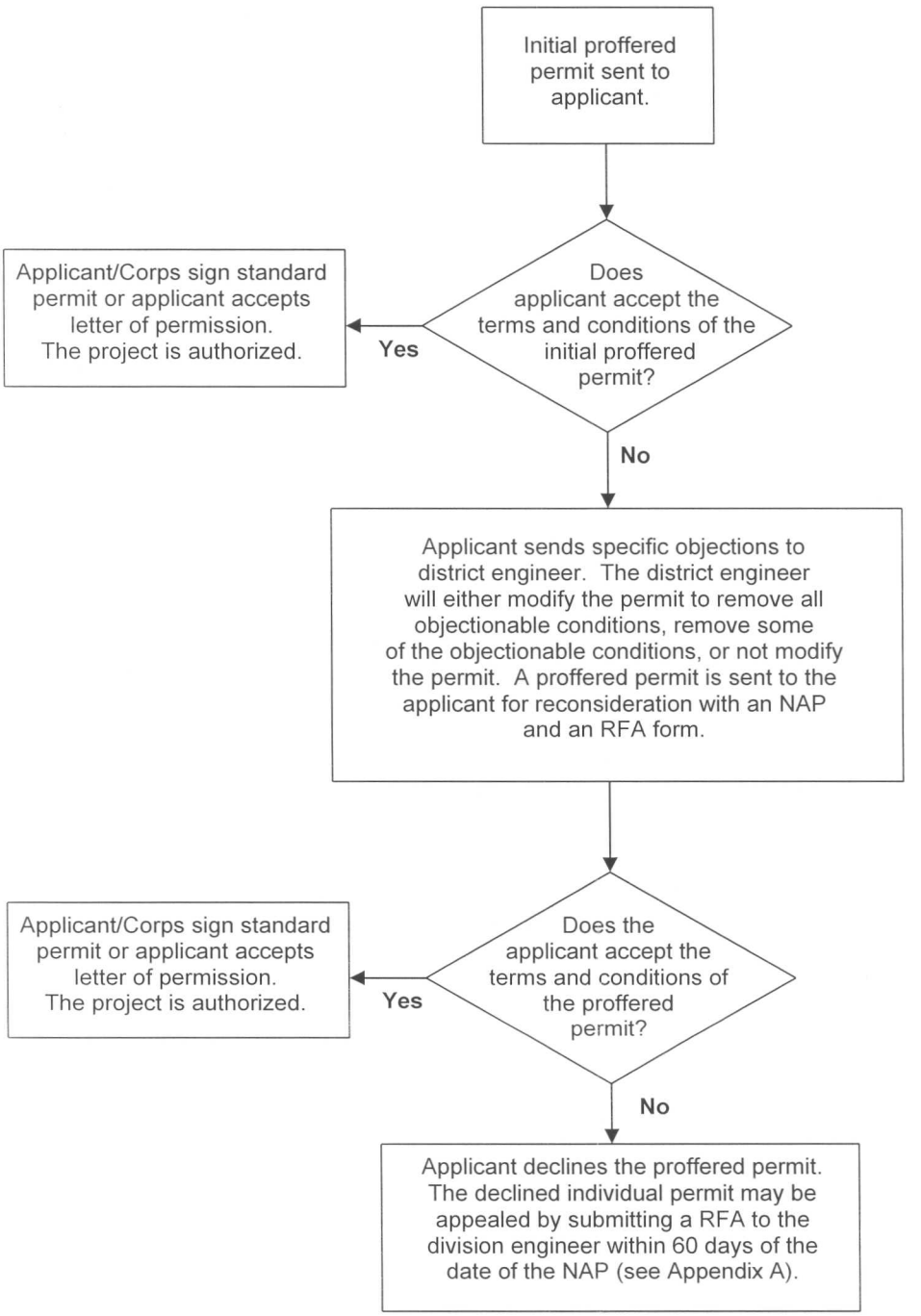

Appendix B

ATTACHMENT to MaineDOT Batch Permit

PRELIMINARY JURISDICTIONAL DETERMINATION FORM

BACKGROUND INFORMATION

A. REPORT COMPLETION DATE FOR PRELIMINARY JURISDICTIONAL DETERMINATION (JD): 2/25/09

B. NAME AND ADDRESS OF PERSON REQUESTING PRELIMINARY JD: Richard Bostwick, MaineDOT Environmental Office, 16 SHS, Augusta, ME 04333

C. DISTRICT OFFICE, FILE NAME, AND NUMBER: New England District; ME DOT 2-Year Bridge Permit Application; NAE-2009-00514

D. PROJECT LOCATION(S) AND BACKGROUND INFORMATION: Place fill below the ordinary high water line and the high tide line of numerous waterways and in their adjacent freshwater and tidal wetlands throughout the State of Maine in order to replace, rehabilitate, or repair numerous bridges and culverts. This work is being conducted in response to Federal and State stimulus efforts and is designed to address critical bridges that need immediate attention to insure public safety and protect the economic vitality of Maine's transportation network.

SEE ATTACHED TABLE OF WATERS AND WETLANDS AND THEIR IMPACTS

State: **Maine** County/parish/borough: **Various** City: **Various**
Center coordinates of site (lat/long in degree decimal format): Lat. ° **Pick List**
, Long. ° **Pick List**.
Universal Transverse Mercator: **Zone 19N - see Table**
Name of nearest waterbody: **Various- see Table**

Identify (estimate) amount of waters in the review area: **See attached Table**
Non-wetland waters: linear feet: width (ft) and/or acres.
Cowardin Class:
Stream Flow:
Wetlands: acres.
Cowardin Class:

Name of any water bodies on the site that have been identified as Section 10 waters: **See attached Table**
Tidal: **Noted on attached table**
Non-Tidal: **Penobscot & Kennebec Rivers**

E. REVIEW PERFORMED FOR SITE EVALUATION (CHECK ALL THAT APPLY):

☒ Office (Desk) Determination. Date: **Various- last on 2/25/09**
☒ Field Determination. Date(s): **Various and limited**

1. The Corps of Engineers believes that there may be jurisdictional waters of the United States on the subject site, and the permit applicant or other affected party who requested this preliminary JD is hereby advised of his or her option to request and obtain an approved jurisdictional determination (JD) for that site. Nevertheless, the permit applicant or other person who requested this preliminary JD has declined to exercise the option to obtain an approved JD in this instance and at this time.

2. In any circumstance where a permit applicant obtains an individual permit, or a Nationwide General Permit (NWP) or other general permit verification requiring "pre-construction notification" (PCN), or requests verification for a non-reporting NWP or other general permit, and the permit applicant has not requested an approved JD for the activity, the permit applicant is hereby made aware of the following: (1) the permit applicant has elected to seek a permit authorization based on a preliminary JD, which does not make an official determination of jurisdictional waters; (2) that the applicant has the option to request an approved JD before accepting the terms and conditions of the permit authorization, and that basing a permit authorization on an approved JD could possibly result in less compensatory mitigation being required or different special conditions; (3) that the applicant has the right to request an individual permit rather than accepting the terms and conditions of the NWP or other general permit authorization; (4) that the applicant can accept a permit authorization and thereby agree to comply with all the terms and conditions of that permit, including whatever mitigation requirements the Corps has determined to be necessary; (5) that undertaking any activity in reliance upon the subject permit authorization without requesting an approved JD constitutes the applicant's acceptance of the use of the preliminary JD, but that either form of JD will be processed as soon as is practicable; (6) accepting a permit authorization (e.g., signing a proffered individual permit) or undertaking any activity in reliance on any form of Corps permit authorization based on a preliminary JD constitutes agreement that all wetlands and other water bodies on the site affected in any way by that activity are jurisdictional waters of the United States, and precludes any challenge to such jurisdiction in any administrative or judicial compliance or enforcement action, or in any administrative appeal or in any Federal court; and (7) whether the applicant elects to use either an approved JD or a preliminary JD, that JD will be processed as soon as is practicable. Further, an approved JD, a proffered individual permit (and all terms and conditions contained therein), or individual permit denial can be administratively appealed pursuant to 33 C.F.R. Part 331, and that in any administrative appeal, jurisdictional issues can be raised (see 33 C.F.R. 331.5(a)(2)). If, during that administrative appeal, it becomes necessary

to make an official determination whether CWA jurisdiction exists over a site, or to provide an official delineation of jurisdictional waters on the site, the Corps will provide an approved JD to accomplish that result, as soon as is practicable. This preliminary JD finds that there *"may be"* waters of the United States on the subject project site, and identifies all aquatic features on the site that could be affected by the proposed activity, based on the following information:

SUPPORTING DATA. Data reviewed for preliminary JD (check all that apply - checked items should be included in case file and, where checked and requested, appropriately reference sources below):

☒ Maps, plans, plots or plat submitted by or on behalf of the applicant/consultant: **Contained in administrative record.**

☐ Data sheets prepared/submitted by or on behalf of the applicant/consultant.

☐ Office concurs with data sheets/delineation report.

☐ Office does not concur with data sheets/delineation report.

☐ Data sheets prepared by the Corps: .

☐ Corps navigable waters' study: .

☐ U.S. Geological Survey Hydrologic Atlas: .

☐ USGS NHD data.

☒ USGS 8 and 12 digit HUC maps.

☒ U.S. Geological Survey map(s). Cite scale & quad name: **Multiple**.

☒ USDA Natural Resources Conservation Service Soil Survey. Citation **all Maine counties Mapped**

☒ National wetlands inventory map(s). Cite name: **Statewide layer in Maine Office of GIS (MEGIS) Database used:**

☐ State/Local wetland inventory map(s): .

☒ FEMA/FIRM maps: **Various as Mapped in the MEGIS database:**

☐ 100-year Floodplain Elevation is: (National Geodectic Vertical Datum of 1929)

☒ Photographs: ☒ Aerial (Name & Date): **MEGIS Ortho Rectified mapping of various dates since 2002**.

or ☒ Other (Name & Date): **Ground photos taken by John Perry and Dan Tierney (DOT Staff) taken fall 2008 and MaineDOT Bridge maintenance files from 1970s to present**..

☐ Previous determination(s). File no. and date of response letter: .

☒ Other information (please specify): **All of these projects are bridges or culverts with wetland area immediately adjacent to USGS mapped streams, that flow into other mapped waterways and eventually into the Gulf of Maine**

IMPORTANT NOTE: The information recorded on this form has not necessarily been verified by the Corps and should not be relied upon for later jurisdictional determinations.

Jay L. Clement 2/26/09

Jay L. Clement Date
Senior Project Manager
Maine Project Office

Judy C. Gates 2/26/09

Judy Gates Date
Director, Environmental Office
Maine Dept. of Transportation

Matrix for Juridictional Determination- County, Town , Road, Waterway, and UTM coordinates; and Resource by Cowardin type, and Impact Amounts							Waterway and permit type	
BR#	UTM Easting in Meters	UTM Northing in Meters	Location	Town	County	Bridge Name	Resource Name & Max. Anticipated Impacts (S.F.) to cowardin types and non-wetland waters (RUS)	Anticipated Permitting Levels All are CORPS 404 permitting unless noted
0077	398053	4874310	Old Danville Road	Auburn	Androscoggin	ROYAL RIVER BRIDGE	Royal River 3000 PSS, 1000 RUS	DEP PBR ACOE Cat II
125	584702	5167200	Richardson Road	Easton	Aroostook	PRESTILE STREAM #1	Prestisle Stream 9000 PFO/EM	DEP PBR ACOE Cat II
2403	556684	5095124	Route 2	Island Falls	Aroostook	IRON	5000 PSS/FO on Alignment 10000 PSS/FO off alignment.	DEP PBR ACOE Ind. As of April 2009
2898	565173	5105531	Main Street	Oakfield	Aroostook	Village	Mattawamkeag River <7000 PEM/PSS	DEP PBR ACOE Ind. As of April 2009
0168?	585597	5060774	Bancroft Road	Weston	Aroostook	Trout Brook	Trout Brook 3500 PFO 1000 RUS	DEP PBR ACOE Ind. As of April 2009
5340	398774	4848250	Winn Road	Cumberland	Cumberland	RIDEOUT	Mill Brook 6500 PFO/SS	DEP PBR ACOE Cat II
2702	395649	4842677	Route 26/100	Falmouth	Cumberland	RR and River CROSSING	Presumpscot River 18000 PSS wetland impact 4000 RUS	DEP Individual ACOE Cat II
5646	404674	4860324	Hallowell Road/ Route 9	Pownal	Cumberland	POWNAL CENTER	E Branch Royal River 5000 PSS/EM	DEP PBR ACOE Cat II
3945	396452	4832981	Route 1	South Portland	Cumberland	VETERANS MEMORIAL	Fore River 5000 EUS Intertidal flats, cobble gravel, adjacnet to shellfish	Condition requiring agency review and approval of plans prior to construction.
3987	392783	4839316	E. Bridge Street	Westbrook	Cumberland	LITTLE	Mill Brook 3000 PEM	DEP PBR ACOE Cat II
2004	408841	4946157	Route 4/27/43	Farmington	Franklin	Abbot	Abbott Brook 2000 PSS	DEP PBR ACOE Ind. As of April 2009
2311	410348	4945082	Route 2/27	Farmington	Franklin	Gilbert Brook	Gilbert Brook 1000 PEM, 1000 RUS	DEP PBR ACOE Ind. As of April 2009
0408	422519	4942730	Swan Road	New Sharon	Franklin	SWAN ROAD	Fillibrown Brook 4000 PFO	DEP PBR ACOE Cat II
2594	418424	4944055	Townway Road	New Sharon	Franklin	MUDDY BROOK	Muddy Brook 2000 PSS	DEP PBR ACOE Ind. As of April 2009
5570	560512	4905066	Route 3	Mt Desert	Hancock	STANLEY BROOK	Stanley Brook New Bridge will have no impacts. Possible on site detour	DEP PBR ACOE Cat II SECTION 10
498	441105	4911005	Blair Road	Augusta	Kennebec	BLAIR ROAD	Riggs Brook/LAP less than 4300 PFO/SS	DEP PBR ACOE Cat II
2719	439629	4909699	Route 100/201	Augusta	Kennebec	RIGGS	Riggs Book 2000 RUS	DEP PBR ACOE Cat II
2412	422789	4896235	Cobbosseeconte	Monmouth	Kennebec	JOCK STREAM	Jock Stream Great Pond	DEP PBR ACOE Cat II
5578	490047	4872527	Island Road	South Thomaston	Knox	SPRUCE HEAD	Atlantic Ocean Tidal 4000 Unveg EUS. 1000 EEM Veg. w/o TD - ACOE	DEP PBR Need to be less than 1000 vegitated to stayat ACOE Cat II SECT
2151	344138	4888200	Shave Hill Road	Fryeburg	Oxford	CHARLES RIVER	Charles River 2500 PFO	DEP PBR ACOE Cat II
2708	344924	4887925	McNeil Road	Fryeburg	Oxford	RED IRON	Old Course Saco River 2500 PFO/SS w/ Detour	DEP PBR ACOE Cat II
2917	384032	4931922	Route 2	Mexico	Oxford	WEBB RIVER		DEP PBR ACOE Cat II
5855	347822	4929548	Cobern Fields	Riley Twp	Oxford	BULL BRANCH	Goose Eye Brook 5000 PFO	LURC ACOE Cat II
0792	347791	4929513	Cobern Fields	Riley Twp	Oxford	BULL BRANCH #2	Goose Eye Brook 5000 PFO	LURC ACOE Cat II

Matrix for Juridictional Determination- County, Town , Road, Waterway, and UTM coordinates; and Resource by Cowardin type, and Impact Amounts							Waterway and permit type	
BR#	UTM Easting in Meters	UTM Northing in Meters	Location	Town	County	Bridge Name	Resource Name & Max. Anticipated Impacts (S.F.) to cowardin types and non-wetland waters (RUS)	Anticipated Permitting Levels All are CORPS 404 permitting unless noted
2711	531324	4962820	Route 2	Bangor	Penobscot	Red	Meadow Brook <4300 RUS	DEP PBR ACOE Ind. As of April 2009
3365	530509	4973809	Cram Street	Bradley	Penobscot	JENKINS (CRAM STREET)	Great Works Stream 6000 PEM/FO w/o TD	DEP PBR ACOE Ind. As of April 2009
5102	500736	496377	Fuller Road	Carmel	Penobscot	Norton	3000 PSS Black Stream	DEP PBR ACOE Cat II
3972	500673	4989204	Bradford Road	Charleston	Penobscot	RICHARDS	Richards Brook 8000 PSS	DEP PBR ACOE Cat II
2436	533484	5009699	Caribou Road	Enfield	Penobscot	Kimball	Cold Stream <3300 PFO/PSS	DEP PBR ACOE Ind. As of April 2009
3040	526769	5009656	Coffin Street/ Route 116	Howland	Penobscot	PISCATAQUIS	Piscataquis River 4000 PFO/SS-RUS	DEP PBR ACOE Ind. As of April 2009
2170	539454	5026232	Route 2	Lincoln	Penobscot	COMBELLASSIE	Camballassie Stream 2000 RUS	DEP PBR ACOE Cat II
2501	478870	4964681	Route 2	Newport	Penobscot	Main Street	East Branch <4300 PFO	DEP PBR ACOE Cat II
6103	478246	4970546	Moosehead Trail/ Route 7/11	Newport	Penobscot	MULLIGAN STREAM	Milligan Stream 7000 PEM/SS	DEP PBR ACOE Cat II
5707	571378	5040896	Center Street/ Route 171	Prentiss Twp	Penobscot	LITTLE MUD BROOK	Little Mud Brook 5000 PEM	DEP PBR ACOE Ind. As of April 2009
3868	497678	5032813	Route 11	Ebeemee (T5 R9 NWP)	Piscataquis	Stinking Brook Bridge	Stinky Brook <4300 PFO	LURC ACOE Ind. As of April 2009
3825	428253	4866986	Foreside Road	Topsham	Sagadahoc	MUDDY RIVER	Muddy River 4999 EUS	DEP PBR ACOE Cat II SECTION 10
5584	435322	4872525	River Road/ Route 128	Woolwich	Sagadahoc	CHOPPS CREEK	Chopps Creek 6000 PEM/SS/FO	DEP PBR ACOE Cat II SECTION 10
2767	459233	4959549	Route 2	Canaan	Somerset	SIBLEY POND	Sibley Pond 10000 PEM/SS w/ staged construcion. 30000 PEM/SS w/	DEP PBR ACOE Cat II
3496	454073	4951420	Route 23	Canaan	Somerset	HASKELL	Haskell Brook 1000 PEM/Stream	DEP PBR ACOE Cat II
2579	431684	4971122	Route 201A/8/16	Embden	Somerset	MOORE	Jackin Brook 4000 PFO	DEP PBR ACOE Cat II
2525	445558	4994720	Route 16	Mayfield Twp	Somerset	MAYFIELD	Bigelow Brook 6000 PFO Add 3500 PFO w/ TD	LURC ACOE Cat II
2187	436848	4951821	Route 2	Norridgewock	Somerset	Covered	Kennebunk River <3000 RUS 100 PEM	DEP PBR ACOE Ind. As of April 2009 SECTION 10
5233	392761	5072918	Route 201	Sandy Bay Twp	Somerset	KELLEY BROOK 2	Kelly Brook 5000 PSS/FO	LURC ACOE Cat II
2777	444425	4961659	Hilton Hill Road	Skowhegan	Somerset	SMITH POND (OLD)	West Branch Wesserunsett Stream 5000 PEM/FO	DEP PBR ACOE Cat II
2775	493785	4937618	Route 139	Monroe	Waldo	SMITH	Works Brook 4300 PFO	DEP PBR ACOE Cat II
3344	503875	4940737	Loggin Road	Winterport	Waldo	TIBBETTS	Marsh Stream 5000 PFO	DEP PBR ACOE Ind.

Matrix for Juridictional Determination- County, Town , Road, Waterway, and UTM coordinates; and Resource by Cowardin type, and Impact Amounts							Waterway and permit type	
BR#	UTM Easting in Meters	UTM Northing in Meters	Location	Town	County	Bridge Name	Resource Name & Max. Anticipated Impacts (S.F.) to cowardin types and non-wetland waters (RUS)	Anticipated Permitting Levels All are CORPS 404 permitting unless noted
5875	608659	5037044	Vanceboro Road/ Route 6	Codyville Plt	Washington	BEAVER BROOK	Beaver Brook 8000 PEM/SS	LURC ACOE Cat II
3584	596173	5003557	Milford Street	Grand Lake Stream Plt	Washington	MILFORD STREET	Grand Lake Stream 1000 PEM. 3000 RUS w/ TD	LURC ACOE Cat II
2688	611771	5008935	Calais Road, Route 1	Princeton	Washington	PRINCETON	Lewy Lake/ Grand Lake Flowage 10000 PUB/ PEM shorland stabilization to a Great Pond.	DEP Individual ACOE Cat II
5375	624478	4967704	Route 191	Twp 18 Ed Bpp	Washington	SOUTHERN INLET	Southern Inlet 6000 PEM/SS	LURC ACOE Cat II
3462	616915	4953459	Route 1A	Whitneyville	Washington	MACHIAS RIVER	Machias River (North Channel) 4000 PEM/SS	DEP PBR ACOE Ind.
3300	343588	4829846	Acton Bridge Road	Acton	York	BALCH MILLS	Little Ossippee River 3000 PFO	DEP PBR ACOE Cat II
1271	362278	4815379	Back Road	Alfred	York	NUTTER'S	Littlefield River PSS/FO 3000	DEP PBR ACOE Cat II
5825	368769	4815326	Alfred Road/ Route 111	Lyman	York	KENNEBUNK RIVER	Kennebunk River 5000 PEM	DEP PBR ACOE Cat II
1236	359120	4792113	Great Hill Road	South Berwick	York	GREAT HILL BR	Great Works River 3500 PFOw/o TD	DEP PBR ACOE Cat II
5610	354481	4786352	Dow Highway/ Route 236	South Berwick	York	GREAT WORKS RIVER	Great Works River 7000 PFO/SS w/o TD	DEP PBR ACOE Cat II
3096	364948	4777253	Organug Road	York	York	SEWALLS	Tidal w/ Shellfish 1000 EUS Shellfish 5000 Tidal	DEP PBR ACOE Cat II SECTION 10
5848	365803	4776595	Route 103	York	York	Station 34	1614 EUS Mudflat without shellfish	DEP PBR ACOE Ind. SECTION 10

STATE OF MAINE
DEPARTMENT OF ENVIRONMENTAL PROTECTION
17 STATE HOUSE STATION
AUGUSTA, ME 04333

DEPARTMENT ORDER

IN THE MATTER OF

MAINE DEPARTMENT OF TRANSPORTATION	) NATURAL RESOURCES PROTECTION
Falmouth & S. Portland, Cumberland County	) COASTAL WETLAND ALTERATION
Princeton, Washington County	) FRESHWATER WETLAND ALTERATION
2010-2011 BRIDGE PERMIT	) WATER QUALITY CERTIFICATION
L-24524-L6-A-N (approval)	)
L-24524-2B-B-N	) FINDINGS OF FACT AND ORDER

Pursuant to the provisions of 38 M.R.S.A. § 480-A et seq. and Section 401 of the Federal Water Pollution Control Act, the Department of Environmental Protection has considered the application of MAINE DEPARTMENT OF TRANSPORTATION with the supportive data, agency review comments, and other related materials on file and FINDS THE FOLLOWING FACTS:

1. PROJECT DESCRIPTION:

A. History: The project is being proposed in response to Public Law, Chapter 647 "An Act To Keep Bridges Safe" and "Keeping our Bridges Safe", a report on Maine's bridge inspection and improvements program dated November 26, 2007. The report listed critical bridges requiring immediate attention to ensure public safety and protect the economic vitality of Maine's transportation network. The Maine Department of Transportation (applicant) screened approximately 300 bridges that had been identified on the list of critical bridges and determined that a significant number of the proposed bridge repair projects do not require a permit from the Department based on the scope or nature of the work required to complete the repair. The remaining bridges were divided into two permitting phases: phase I (2010-2011), included herein, and phase II (2012-2013), which will be submitted to the Department for permitting in 2011. In February 2009, the applicant and the Department established a Memorandum of Agreement (MOA), which established an umbrella style of permitting multiple projects within a single application.

B. Summary: The applicant proposes to repair and/or replace 51 bridges at various locations across the State as phase I of the "Keeping our Bridges Safe" initiative. The applicant has designed 49 of the bridge repair and/or replacement projects to meet the standards pursuant to Chapter 305, Permit-by-Rule Standards (PBR), Sections # 4 Replacement of Structures and #11 State Transportation Facilities (PBR #47992). The applicant agrees to all the terms and conditions of Chapter 305 for the 49 qualifying bridges including work window timing restrictions required by the Maine Department of Inland Fisheries & Wildlife (MDIF&W), except as provided by the Special Permit Conditions associated with this permit. The bridges are listed in Attachments #1 and #3 of the application, which includes the bridge identification numbers, locations, scope of the work, proposed impacts, and review agency comments.

In addition to the 49 bridge projects that qualify for permitting pursuant to Chapter 305, the applicant proposes to undertake repairs at two (2) bridge locations that require approval through an individual Natural Resources Protection Act (NRPA) permit. The two (2) bridges are the Route 26/100 Presumpscot River bridge in Falmouth and the Route 1 Calais Road bridge located over Lewy Lake in Princeton. The specific detail of these three proposed bridge projects are as follows:

1) Falmouth, Route 26/100, Presumpscot River Bridge. The bridge project is identified as bridge #2702 in attachments #1 and #3 of the application. The applicant proposes to replace and expand the existing bridge structure, impacting approximately 18,000 square feet of palustrine scrub shrub wetland and 4,000 square feet of river bottom for the placement of piers for the new bridge.

2) Princeton, Calais Road (Rt # 1) bridge. The bridge project is identified as bridge #2688 in attachments #1 and #3 of the application. The applicant proposes to replace the existing structure with a wider structure and impact approximately 10,000 square feet of palustrine unconsolidated bottom and emergent wetland impacts to accommodate snowmobile and pedestrian use at the request of the Passamaquoddy Nation.

The applicant has proposed project specifications for all in-water work associated with the bridge repair and replacements as discussed further in Findings #3-5. The entire project specifications will be annually reviewed beginning in January 2010, which will provide the Department an opportunity to request the applicant address any project specific concerns. The applicant intends to advertise and construct the bridges at various times over the next 2 years starting in May 2009. To facilitate construction monitoring, the applicant included in the application a spreadsheet, which will facilitate project tracking review, and construction under this application. Starting in May, the applicant will update the spreadsheet on a monthly basis to provide current information regarding project status and construction timing to the Department.

C. Current Use of the Site: The proposed project sites contain bridges over numerous rivers, streams, brooks, great ponds, and tidal wetlands throughout the State of Maine.

2. EXISTING SCENIC, AESTHETIC, RECREATIONAL OR NAVIGATIONAL USES:

In accordance with Chapter 315, Assessing and Mitigating Impacts to Scenic and Aesthetic Uses, the applicant submitted a copy of the Department's Visual Evaluation Field Survey Checklist as Appendix A to the application along with a description of the property and the proposed project. The applicant also submitted several photographs of each proposed project site.

The proposed projects requiring individual permit review are located over the Presumpscot River and Lewy Lake, which are scenic resources visited by the general public, in part, for the use, observation, enjoyment and appreciation of its natural and cultural visual qualities. The proposed projects are expansions or replacements of existing bridges. The applicant has submitted photographs of all the sites where work is proposed. The proposed replacements or expansions do not significantly change the dimensions of the bridges as viewed from the scenic resource.

The proposed projects were evaluated using the Department’s Visual Impact Assessment Matrix and were found to have an acceptable potential visual impact rating. Based on the information submitted in the application and the visual impact rating, the Department determined that the location and scale

of the proposed activity is compatible with the existing visual quality and landscape characteristics found within the viewshed of the scenic resource in the project area.

The Department did not identify any issues involving existing recreational and navigational uses.

The Department finds that the proposed activities will not unreasonably interfere with existing scenic, aesthetic, recreational or navigational uses of the protected natural resources.

3. SOIL EROSION:

The applicant proposes to adhere to the most recent version of MaineDOT's Highway Standard Specifications including Special Provision 656-Temporary Soil Erosion and Water Pollution Control Plan (SEWPCP) for each bridge project. Language requiring that all contractors follow these specifications will be incorporated into the contract terms and conditions for all construction project contracts. In addition, the applicant will ensure that the following erosion control provisions are followed for each bridge repair project:

A. The MaineDOT Best Management Practices (BMPs) for Erosion and Sedimentation Control Manual (February 2008) will be applied and maintained on all projects. As standard practice for all projects, Surface Water Quality personnel and Regional Environmental Coordinators will review the draft SEWPCP, make final recommendations, and the project resident will approve temporary and permanent erosion and sedimentation provisions for inclusion in each contract awarded by the applicant. In addition, Maine DOT Environmental Office staff will provide oversight of the appropriate application of BMPs, technical assistance to resident engineers, and on-site response on a project specific basis.

B. The applicant will utilize the following in-water work standards to mitigate against unreasonable erosion of soil material and operate outside of standard in-water work windows provided that:

1). The applicant will use turbidity limiting measures to limit the effects of siltation for all pile removals and replacements in fine substrates such as clay, silt and mud. Turbidity limiting measure will include but are not limited to working on an out-going tide, or the use of silt booms, floating curtains, etc.

2). Stream flow diversion and re-establishment will be performed in conformance with the latest version of the MaineDOT BMP manual.

3). Sandbags or jersey barriers used for coffer dams or temporary stream diversions will be removed either by hand or by use of shore-based machinery and reach-in techniques.

4). The applicant will utilize temporary work staging platforms to facilitate bridge repair and re-construction activities. Staging platforms will consist of temporary pile supported work platforms, work via barge, work via adjacent upland, or work from the existing structure. Placement and/or removal of staging equipment will occur in accordance with the MaineDOT BMP manual.

5). In all waterways, the applicant will divert stream flow as necessary to create a stable dry work environment using techniques described in the MaineDOT BMP manual.

Based on a review of the Best Management Practices documents submitted by the applicant as part of the application and the standard project provisions outlined above, the Department has determined that the applicant has made adequate provision to ensure that the project will not result in an unreasonable discharge of sediment into the resource.

Therefore, the Department finds that the activities will not cause the unreasonable erosion of soil or sediment discharge into the resource nor unreasonably inhibit the natural transfer of soil from the terrestrial to the marine or freshwater environment provided that the applicant: applies the provisions of the MaineDOT BMPs for Erosion and Sedimentation Control BMP Manual (February 2008) on all projects; ensures that Surface Water Quality personnel and Regional Environmental Coordinators review, and approve temporary and permanent erosion and sedimentation provisions for inclusion in each contract awarded; ensures that Environmental Office staff provide oversight of the appropriate application of BMPs, technical assistance to resident engineers and on-site response on a project specific basis; and follows the in-water work standards outlined above for all bridge repair and replacement projects.

4. HABITAT CONSIDERATIONS:

The applicant proposes to utilize its "Waterway and Wildlife Crossing Policy and Design Guide" (July 2008) on all projects. The Waterway and Wildlife Crossing Policy and Design Guide requires the applicant to develop effective methods of building, repairing, and maintaining transportation infrastructure, while protecting important aquatic, wildlife, and surface water resources. The applicant is not proposing to block fish passage during the re-construction of any of the Route 26/100, Presumpscot River Bridge or the Calais Road Bridge.

A. Falmouth, Route 26/100, Presumpscot River Bridge (Bridge #2702): The Department reviewed a Geographic Information System database and did not identify any significant wildlife habitat associated with this project site. The proposed project was reviewed by the Department of Inland Fisheries & Wildlife (MDIFW), which stated that it did not identify any issues with regard to rare, threatened or endangered species at the proposed project site. The Department of Marine Resources (DMR) review the proposed project and requests that the applicant limit construction activity for the Route 26/100 Presumpscot River bridge project to the period between August 1st and April 31st due to the presence of alewives and herring. The applicant has agreed to this in-water work window restriction.

B. Princeton, Calais Road (Rt #1) bridge (Bridge #2688): The Department reviewed a Geographic Information System database, which did not identify any rare, threatened or endangered species with the proposed project site. MDIFW reviewed the proposed project site and did not identify any issues of concern, rare, threatened or endangered species at the site. DMR has reviewed the proposed project site and did not identify any species of concern or any construction window restrictions.

The applicant further proposes to include language within each bridge repair/replacement contract that restricts in-water work to a specific time of year if determined necessary in consultation with MDIFW and DMR. Agency staff from MDIFW and DMR and/or the Department may modify any in-water work window if necessary to address specific fisheries concerns identified during the construction process. In addition, the Coordination and Permits Division Manager or the Environmental Office Director at MaineDOT may extend a project's in-water work window by up to 10 days without requesting a permit modification from the Department provided that a notice of justification and need is submitted to the Department prior to granting the extension.

The Department finds that the activities will not unreasonably harm any significant wildlife habitat, freshwater wetland plant habitat, threatened or endangered plant habitat, aquatic or adjacent upland habitat, travel corridor, freshwater, estuarine or marine fisheries or other aquatic life provided that the applicant will limit construction of the Route 26/100 Presumpscot River Bridge in Falmouth to a August 1st to April 30th in-water work window, the applicant will apply its "Waterway and Wildlife Crossing Policy and Design Guide" (July 2008) to all projects, and the applicant may extend a project's in-water work window by up to 10 days without requesting a permit modification from the Department provided that they submit a notice of justification and need to the Department prior to granting the extension.

5. WATER QUALITY CONSIDERATIONS:

The applicant's Best Management Practices for Erosion and Sedimentation Control Manual requires each contractor to install and maintain appropriate erosion controls and to utilize good housekeeping practices for equipment utilized on construction projects. Each contractor is required to utilize proper fuel filling procedures for equipment and maintain equipment to prevent leaks. Each site is required to have a spill kit to clean up spills if they occur and a project specific plan for responding to spills including contacting the Department to report and remediate a spill.

The Department finds that the proposed project will violate any state water quality law, including those governing the classification of the State's waters.

6. WETLANDS AND WATERBODIES PROTECTION RULES:

The applicant proposes to impact approximately 18,000 square feet of palustrine scrub shrub and 4,000 square feet of riverine bottom to replace the Route 26/100 Presumpscot River bridge in Falmouth and impact approximately 10,000 square feet of palustrine unconsolidated bottom and palustrine emergent wetlands associated with Lewy Lake to replace the Route 1 Lewy Lake bridge in Princeton..

The Department's Wetlands and Waterbodies Protection Rules, Chapter 310, require that the applicant meet the following standards:

A. Avoidance. No activity may be permitted if there is a practicable alternative to the project that would be less damaging to the environment. Each application for a Natural Resources Protection Act permit must provide an analysis of alternatives in order to demonstrate that a practicable alternative does not exist. The applicant submitted an alternatives analysis for the proposed project dated February 18, 2009. The applicant considered alternatives to bridge replacement where ever possible; however given the structural condition of some of the bridges the applicant is unable to avoid impacts while meeting the project purpose of ensuring an adequate transportation system and protecting public safety.

B. Minimal Alteration. The amount of waterbody to be altered must be kept to the minimum amount necessary for meeting the overall purpose of the project. The applicant has minimized wetland impacts by installing new abutments in back of existing structures and removing the existing abutments to increase the bank full width of the waterway whenever practicable. The 48 bridges qualifying for PBR include replacing 10 of the bridges with wider structures, 6 of the projects consist of large pipes that will have weirs installed to enhance fish passage, and 1 project

will have a natural bottom pipe-arch installed. The Department notes that replacing the existing structures with longer spans or wider structures will increase aquatic habitat and flood flow capacity. Some of these projects will restore fish passage in water bodies where previously none occurred due to the structure limitations such as hanging culverts. Weirs will be installed in structures where a need is identified to improve aquatic organism passage. Finally, the applicant intends to remove 2 redundant bridges: the Muddy Brook Bridge on the Townway Road in New Sharon and the Smith Pond Bridge on the Hilton Hill Road in Skowhegan, both of which contain critical habitat for Atlantic salmon.

C. Compensation. In accordance with Chapter 310 Section 5 (C), compensation is required to achieve the goal of no net loss of waterbody functions and values. The applicant is not proposing compensation as many of the projects meet PBR standards and have minimal impact. The remaining two projects involve approximately 28,000 square feet of impacts and would otherwise require compensation in accordance with Chapter 310. However, the scope of the projects include the removal of 2 redundant or archaic bridges, increasing channel width in the majority of replacement projects, and improving hydrologic capacity wherever possible, which will offset the proposed impacts. In addition, the 10 projects involving longer spans or wider structures will result in more riverine habitat at the locations. Therefore, the Department is not requiring compensation as the nature of the projects is self-mitigating.

The Department finds that the applicant has avoided and minimized waterbody impacts to the greatest extent practicable, and that the proposed projects represent the least environmentally damaging alternative that meets the overall purpose of the project, and that the function and value benefits of the projects overall outweigh any potential adverse impacts resulting from limited encroachment of replaced or rehabilitated structures into the protected natural resources.

7. OTHER CONSIDERATIONS:

The Department did not identify any other issues involving existing scenic, aesthetic, or navigational uses, soil erosion, habitat or fisheries, the natural transfer of soil, natural flow of water, water quality, or flooding.

BASED on the above findings of fact, and subject to the conditions listed below, the Department makes the following conclusions pursuant to 38 M.R.S.A. Sections 480-A et seq. and Section 401 of the Federal Water Pollution Control Act:

A. The proposed activity will not unreasonably interfere with existing scenic, aesthetic, recreational, or navigational uses.

B. The proposed activity will not cause unreasonable erosion of soil or sediment provided that the applicant's BMP manual for Erosion and Sedimentation Control Manual (February 2008) will be applied and maintained on all projects as indicated in Finding #3A.

C. The proposed activity will not unreasonably inhibit the natural transfer of soil from the terrestrial to the marine or freshwater environment.

D. The proposed activity will not unreasonably harm any significant wildlife habitat, freshwater wetland plant habitat, threatened or endangered plant habitat, aquatic or adjacent upland habitat, travel corridor, freshwater, estuarine, or marine fisheries or other aquatic life provided that the applicant will

utilize an August 1st to April 30th in-water work window for the Route 26/100 Presumpscot River Bridge in Falmouth except as specified in the Special In-Water Work Provisions included in the application, the applicant will apply its "Waterway and Wildlife Crossing Policy and Design Guide" (July 2008) to all projects, and the applicant may extend a project's in-water work window by up to 10 days without requesting a permit modification from the Department provided that they submit a notice of justification and need to the Department prior to granting the extension.

E. The proposed activity will not unreasonably interfere with the natural flow of any surface or subsurface waters.

F. The proposed activity will not violate any state water quality law including those governing the classifications of the State's waters.

G. The proposed activity will not unreasonably cause or increase the flooding of the alteration area or adjacent properties.

H. The proposed activity is not on or adjacent to a sand dune.

I. The proposed activity is not on an outstanding river segment as noted in Title 38 M.R.S.A. Section 480-P.

THEREFORE, the Department APPROVES the above noted application of MAINE DEPARTMENT OF TRANSPORTATION for the 2010-2011replacement, rehabilitation, or removal of bridges as proposed, SUBJECT TO THE ATTACHED CONDITIONS, and all applicable standards and regulations:

1. Standard Conditions of Approval, a copy attached.

2. The applicant shall take all necessary measures to ensure that its activities or those of its agents do not result in measurable erosion of soil on the site during the construction of the project covered by this approval.

3. The applicant's BMP manual for Erosion and Sedimentation Control Manual (February 2008) shall be applied and maintained on all projects.

4. The applicant shall utilize an August 1st to April 30th in-water work window for the Route 26/100 Presumpscot River Bridge in Falmouth except as specified in the Special In-Water Work Provisions included in the application.

5. The applicant shall apply its "Waterway and Wildlife Crossing Policy and Design Guide" (July 2008) to all projects.

6. The applicant may extend a project specific time of year restriction by as much as 10 days without having to formally modify the permit provided that it submits a notice of justification and need to the Department prior to granting the extension.

7. Severability. The invalidity or unenforceability of any provision, or part thereof, of this License shall not affect the remainder of the provision or any other provisions. This License shall be construed and enforced in all respects as if such invalid or unenforceable provision or part thereof had been omitted.

THIS APPROVAL DOES NOT CONSTITUTE OR SUBSTITUTE FOR ANY OTHER REQUIRED STATE, FEDERAL OR LOCAL APPROVALS NOR DOES IT VERIFY COMPLIANCE WITH ANY APPLICABLE SHORELAND ZONING ORDINANCES.

DEPARTMENT OF ENVIRONMENTAL PROTECTION

PLEASE NOTE THE ATTACHED SHEET FOR GUIDANCE ON APPEAL PROCEDURES

do/ats#69527/l24524an

Natural Resource Protection Act (NRPA)
Standard Conditions

THE FOLLOWING STANDARD CONDITIONS SHALL APPLY TO ALL PERMITS GRANTED UNDER THE NATURAL RESOURCE PROTECTION ACT, TITLE 38, M.R.S.A. SECTION 480-A ET.SEQ. UNLESS OTHERWISE SPECIFICALLY STATED IN THE PERMIT.

A. Approval of Variations From Plans. The granting of this permit is dependent upon and limited to the proposals and plans contained in the application and supporting documents submitted and affirmed to by the applicant. Any variation from these plans, proposals, and supporting documents is subject to review and approval prior to implementation.

B. Compliance With All Applicable Laws. The applicant shall secure and comply with all applicable federal, state, and local licenses, permits, authorizations, conditions, agreements, and orders prior to or during construction and operation, as appropriate.

C. Erosion Control. The applicant shall take all necessary measures to ensure that his activities or those of his agents do not result in measurable erosion of soils on the site during the construction and operation of the project covered by this Approval.

D. Compliance With Conditions. Should the project be found, at any time, not to be in compliance with any of the Conditions of this Approval, or should the applicant construct or operate this development in any way other the specified in the Application or Supporting Documents, as modified by the Conditions of this Approval, then the terms of this Approval shall be considered to have been violated.

E. Initiation of Activity Within Two Years. If construction or operation of the activity is not begun within two years, this permit shall lapse and the applicant shall reapply to the Board for a new permit. The applicant may not begin construction or operation of the activity until a new permit is granted. Reapplications for permits shall state the reasons why the applicant will be able to begin the activity within two years form the granting of a new permit, if so granted. Reapplications for permits may include information submitted in the initial application by reference.

F. Reexamination After Five Years. If the approved activity is not completed within five years from the date of the granting of a permit, the Board may reexamine its permit approval and impose additional terms or conditions to respond to significant changes in circumstances which may have occurred during the five-year period.

G. No Construction Equipment Below High Water. No construction equipment used in the undertaking of an approved activity is allowed below the mean high water line unless otherwise specified by this permit.

H. Permit Included In Contract Bids. A copy of this permit must be included in or attached to all contract bid specifications for the approved activity.

I. Permit Shown To Contractor. Work done by a contractor pursuant to this permit shall not begin before the contractor has been shown by the applicant a copy of this permit.

Revised (4/92/DEP LW0428

DEPARTMENT OF ENVIRONMENTAL PROTECTION
Erosion Control for Homeowners

Before Construction

1. If you have hired a contractor, make sure you discuss your permit-by-rule with them. Talk about what measures they plan to take to control erosion. Everybody involved should understand what the resource is, and where it is located. Most people can identify the edge of a lake or river. However, the edges of wetlands are often not so obvious. Your contractor may be the person actually pushing dirt around, but you are both responsible for complying with the permit-by-rule.

2. Call around to find where erosion control materials are available. Chances are your contractor has these materials already on hand. You probably will need silt fence, hay bales, wooden stakes, grass seed (or conservation mix), and perhaps filter fabric. Places to check for these items include farm & feed supply stores, garden & lawn suppliers, and landscaping companies. It is not always easy to find hay or straw during late winter and early spring. It also may be more expensive during those times of year. Plan ahead -- buy a supply early and keep it under a tarp.

3. Before any soil is disturbed, make sure an erosion control barrier has been installed. The barrier can be either a silt fence, a row of staked hay bales, or both. Use the drawings below as a guide for correct installation and placement. The barrier should be placed as close as possible to the soil-disturbance activity.

4. If a contractor is installing the erosion control barrier, double check it as a precaution. Erosion control barriers should be installed "on the contour", meaning at the same level or elevation across the land slope, whenever possible. This keeps stormwater from flowing to the lowest point along the barrier where it can build up and overflow or destroy the barrier.

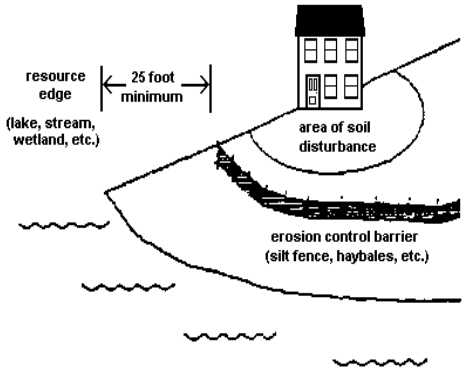

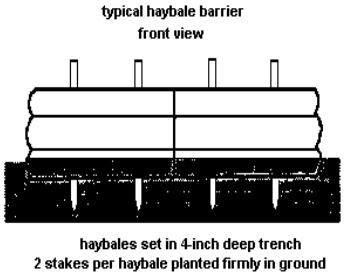

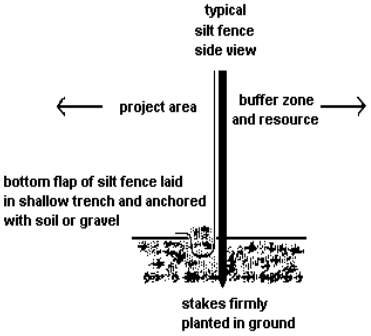

During Construction

1. Use lots of hay or straw mulch on disturbed soil. The idea behind mulch is to prevent rain from striking the soil directly. It is the force of raindrops hitting the bare ground that makes the soil begin to move downslope with the runoff water, and cause erosion. More than 90% of erosion is prevented by keeping the soil covered.

2. Inspect your erosion control barriers frequently. This is especially important after a rainfall. If there is muddy water leaving the project site, then your erosion controls are not working as intended. You or your contractor then need to figure out what can be done to prevent more soil from getting past the barrier.

3. Keep your erosion control barrier up and maintained until you get a good and healthy growth of grass and the area is permanently stabilized.

MaineDOT Environmental Office (Field Studies Unit) General Note

To comply with suggestions made by the USFWS in Section 4.3 (Effects on the Candidate species New England Cottontail) found in the batched Bridge Biological Opinion dated March 18, 2009, the four landscape specifications listed are intended to restore and enhance the New England cottontail habitat that may be affected by the Bridge project

SPECIAL PROVISIONS SECTION 618.143 LANDSCAPE (Falmouth Meadow Mix)

SECTION 621 LANDSCAPE (Plant Species Specification and Quantities List)

SPECIAL PROVISIONS SECTION 621.97 ENGINEERED WOODY DEBRIS
(New England Cottontail Brush Piles)

SPECIAL PROVISIONS SECTION 717.03 LANDSCAPE (Wildlife Seed Mix)

Environmental Summary Sheet

PIN #: 15094.00 **Town: Falmouth**
Environmental Office Contact: Ben Condon (ben.condon@maine.gov) 592-0921
Coordination & Permits Manager: Matt Steele **Date Submitted: 12/7/09**
Database/Projex ☒

☒ **Section 106 and Tribal Consultation**

Architectural Resources	PA ☐	Applicable☒	Approved ☒
Archeological Resources	PA ☐	Applicable☒	Approved ☒
Tribal Consultation	Tribal Letters Sent ☒		Approved ☐
Town & Local Hist. Society Contacted	Yes ☒	No☐	

☒ **4(f) and 6(f)**

Section 4(f)	Are there Right of Way Takes or Easements on Public Park Property	☐ Yes	☒ No
	Are there Right of Way Takes or Easements on Public Recreational Property	☐ Yes	☒ No
	Are there Right of Way Takes or Easements on Public Wildlife Refuge Property	☐ Yes	☒ No
	Are there Right of Way Takes or Easements on Historic Eligible or Listed Property	☐Yes	☒ No
	Are there Right of Way Takes or Easements on Property within a Historic District	☐Yes	☒ No
	Has MHPC Determined an Adverse Effect	☐Yes	☒ No
	Is a Programmatic or Full 4(f) Document Required	☐Yes	☒ No

LAWCON 6(f) N/A ☒ Applicable☐ Approved ☐

☒ **FEMA** GIS Floodplains Checked ☒ N/A ☒ Applicable☐ Approved ☐

☒ **Maine Department of Inland Fisheries and Wildlife (MDIFW) Essential Habitat**

GIS Essential Habitats Checked ☒

Eagle Nest	N/A ☒	Applicable ☐	Approved ☐
Piping Plover	N/A ☒	Applicable ☐	Approved ☐
Roseate Tern	N/A ☒	Applicable☐	Approved ☐

☒ **Maine Department of Conservation/ Public Lands, Submerged Land Lease** N/A ☒ Applicable ☐

☒ **Land Use Regulation Commission (LURC)** Not Applicable ☒ No permit Required ☐

Notice	☐	Approved ☐
Permit	☐	Approved ☐

☒ **Maine Department of Environmental Protection (MDEP) Site Location of Development**

N/A ☒ Applicable ☐ Approved ☐

☒ **Maine Department of Environmental Protection (MDEP), Natural Resource Protection Act**

No permit required ☐

Exempt ☐	(Must use erosion and sediment control and not block fish passage.)	
PBR ☐		Approved ☐
Tier 1 ☐		Approved ☐
Tier 2 ☐		Approved ☐
Individual ☒		Approved ☒

☒ **Army Corps of Engineers (ACOE), Section 10 of the Rivers and Harbors Act and Section 404 of the Clean Water Act.**

No permit required ☐

Category 1-NR☐	Approved ☐
Category 2☐	Approved ☐
Category 3☒	Approved ☒

NOTE: If project requires a Category 2 or 3 Permit from the ACOE, then the MaineDOT Resident **must** fill out a **"Work Start Notification Form"** and a **"Compliance Certification Form" (when project has been completed)** and send them to the address listed on the forms.

☒ **IN-STREAM TIMING RESTRICTIONS:** 105 Special Provision ☒ n/a ☐

Dates instream work is allowed: 8/1 through 4/31

☒ **NEPA Complete**

☒ Special Provision 656, Erosion Control Plan ☒ Special Provision 203, Dredge Spec and/or Hazardous Waste Spec
☒ Field Studies General Note