August 01, 2007
Supersedes July 6, 2005

BIDDING INSTRUCTIONS

FOR ALL PROJECTS:

1. Use pen and ink to complete all paper Bids.

2. As a minimum, the following must be received prior to the time of Bid opening:

   For a Paper Bid:
   a) a copy of the Notice to Contractors, b) the completed Acknowledgement of Bid Amendments form, c) the completed Schedule of Items, d) two copies of the completed and signed Contract Offer, Agreement & Award form, e) a Bid Guaranty, and f) any other certifications or Bid requirements listed in the Bid Documents as due by Bid opening.

   For an Electronic Bid:
   a) a completed Bid using Expedite® software and submitted via the Bid Express™ web-based service, b) a Bid Guaranty (as described below) or a faxed copy of a Bid Bond (with original to be delivered within 72 hours), and c) any other certifications or Bid requirements listed in the Bid Documents as due by Bid opening.

3. Include prices for all required items in the Schedule of Items. ("Zero is not considered a Bid price.")

4. Include a Bid Guaranty. Acceptable forms are:

   a. a properly completed and signed Bid Bond on the Department's prescribed form (or on a form that does not contain any significant variations from the Department's form as determined by the Department) for 5% of the Bid Amount or

   b. an Official Bank Check, Cashier's Check, Certified Check, U.S. Postal Money Order or Negotiable Certificate of Deposit in the amount stated in the Notice to Contractors.

5. If a paper Bid is to be sent, Federal Express overnight delivery is suggested as the package is delivered directly to the DOT Headquarters Building located at 16 Child Street in Augusta. Other means, such as U.S. Postal Service's Express Mail has proven not to be reliable.

IN ADDITION, FOR FEDERAL AID PROJECTS:

6. Complete the DBE Proposed Utilization form in the proper amounts, and deliver to the Civil Rights Office, or fax to (207)624-3431 by 4:30 PM on bid opening day.

If you need further information regarding Bid preparation, call the DOT Contracts Section at (207)624-3410.

For complete bidding requirements, refer to Section 102 of the Maine Department of Transportation, Standard Specifications, Revision of December 2002.

January 30, 2004
Supercedes February 11, 2003

NOTICE

The Maine Department of Transportation is attempting to improve the way Bid Amendments/Addendums are handled, and allow for an electronic downloading of bid packages from our website, while continuing to maintain a planholders list.

Prospective bidders, subcontractors or suppliers who wish to download a copy of the bid package and receive a courtesy notification of project specific bid amendments, must provide an email address to Diane Barnes or Mike Babb at the MDOT Contracts mailbox at: MDOT.contracts@maine.gov. Each bid package will require a separate request.

Additionally, interested parties will be responsible for reviewing and retrieving the Bid Amendments from our web site, and acknowledging receipt and incorporating those Bid Amendments in their bids using the Acknowledgement of Bid Amendment Form.

The downloading of bid packages from the MDOT website is not the same as providing an electronic bid to the Department. Electronic bids must be submitted via http://www.BIDX.com. For information on electronic bidding contact Larry Childs at Larry.Childs@maine.gov.

NOTICE

For security and other reasons, all Bid Packages which are mailed, shall be provided in double (one envelope inside the other) envelopes. The *Inner Envelope* shall have the following information provided on it:

Bid Enclosed - Do Not Open
PIN:
Town:
Date of Bid Opening:
Name of Contractor with mailing address and telephone number:

In Addition to the usual address information, the *Outer Envelope* should have written or typed on it:

Double Envelope: Bid Enclosed
PIN:
Town:
Date of Bid Opening:
Name of Contractor:
This should not be much of a change for those of you who use Federal Express or similar services.

Hand-carried Bids may be in one envelope as before, and should be marked with the following infrormation:

Bid Enclosed: Do Not Open
PIN:
Town:
Name of Contractor:

STATE OF MAINE DEPARTMENT OF TRANSPORTATION

Bid Guaranty-Bid Bond Form

KNOW ALL MEN BY THESE PRESENTS THAT_____

_____, of the City/Town of _____and State of_____

as Principal, and _____as Surety, a

Corporation duly organized under the laws of the State of_____and having a usual place of

Business in _____and hereby held and firmly bound unto the Treasurer of

the State of Maine in the sum of_____,for payment which Principal and Surety bind

themselves, their heirs, executers, administrators, successors and assigns, jointly and severally.

The condition of this obligation is that the Principal has submitted to the Maine Department of Transportation, hereafter Department, a certain bid, attached hereto and incorporated as a part herein, to enter into a written contract for the construction of _____

_____

_____and if the Department shall accept said bid and the Principal shall execute and deliver a contract in the form attached hereto (properly completed in accordance with said bid) and shall furnish bonds for this faithful performance of said contract, and for the payment of all persons performing labor or furnishing material in connection therewith, and shall in all other respects perform the agreement created by the acceptance of said bid, then this obligation shall be null and void; otherwise it shall remain in full force, and effect.

Signed and sealed this_____day of _____20_____

WITNESS:

_____

_____

_____

WITNESS

_____

_____

_____

PRINCIPAL:

By_____

By:_____

By:_____

SURETY:

By_____

By:_____

Name of Local Agency: _____

SAMPLE

NOTICE

Bidders:

Please use the attached "Request for Information" form when faxing questions and comments concerning specific Contracts that have been Advertised for Bid. Include additional numbered pages as required. Questions are to be faxed to the number listed in the Notice to Contractors. This is the only allowable mechanism for answering Project specific questions. Maine DOT will not be bound to any answers to Project specific questions received during the Bidding phase through other processes.

State of Maine
Department of Transportation

REQUEST FOR INFORMATION

Date _____ Time _____

Information Requested: **PIN:** _____ **Town(s):** _____

_____

_____

_____

_____

_____

_____

_____

_____

_____

_____

_____

_____

Request by: _____ **Phone: (_____)**_____
Bid Date: _____ **Fax: (_____)**_____

Complete top portion of form and transmit to the number listed in the Notice to Contractors

RFI No: _____ **RFI received:** _____

Response:_____

_____

_____

_____

_____

_____

_____

_____

_____

_____

_____

Response By:_____ Date: _____

NOTICE

Disadvantaged Business Enterprise Proposed Utilization

The Apparent Low Bidder must submit the Disadvantaged Business Enterprise Proposed Utilization form by close of Business (4:30 P.M.) on Bid day.

The Contractor's Disadvantaged Business Enterprise Proposed Utilization Plan form contains additional information that is required by USDOT.

The Contractor's Disadvantaged Business Enterprise Proposed Utilization Plan form must be used.

A copy of the new Contractor's Disadvantaged Business Enterprise Proposed Utilization Plan and instructions for completing it are attached.

Note: Questions about DBE firms, or to obtain a printed copy of the DBE Directory, contact the Civil Rights Office at (207) 624-3066.

MDOTs DBE Directory of Certified firms can also be obtained at www.maine.gov/mdot/disadvantaged-business-enterprises/dbe-home.php

INSTRUCTIONS FOR PREPARING THE CONTRACTOR'S DISADVANTAGED BUSINESS ENTERPRISE UTILIZATION PLAN

The Contractor Shall:

1. Submit a completed Contractor's Disadvantaged Business Enterprise Utilization Plan to the Contract's Engineer by 4:30 P.M. on the Bid day.

2. Extend equal opportunity to MDOT certified DBE firms (as listed in MDOT's DBE Directory of Certified Businesses) in the selection and utilization of Subcontractors and Suppliers.

SPECIFIC INSTRUCTIONS FOR COMPLETING THE FORM:

Insert Contractor name, the name of the person(s) preparing the form, and that person(s) telephone and fax number.

Provide total Bid price, Federal Project Identification Number, and location of the Project work.

In the columns, name each DBE firm to be used, provide the Unit or Item cost of the Work/Product to be provided by the DBE firm, give a brief description of the Work, and the dollar value of the Work.

If no DBE firm is to be utilized, the Contractor must document the reason(s) why no DBE firms are being used. Specific supporting evidence of good faith efforts taken by Contractors to solicit DBE Bidders must be attached. This evidence, as a minimum, includes phone logs, e-mail and/or mail DBE solicitation records, and the documented results of these solicitations.

NOTICE

Maine Department of Transportation
Disadvantaged Business Enterprise Program

Notice is hereby given that in accordance with US DOT regulation 49 CFR Part 26, the Maine Department of Transportation has established a DBE Program for disadvantaged business participation in the federal-aid construction program; MaineDOT contracts covered by the program include consulting, construction, supplies, manufacturing, and service contracts.

For FFY 2008 (October 1, 2007 through September 30, 2008), MaineDOT has established a DBE participation goal of 4.5% to be achieved through race/gender neutral and race/gender conscious means.

Interested parties may view MaineDOT's DBE goal setting methodology for the next 30 days during normal business hours (8-4, M-F) at the Maine Department of Transportation, Civil Rights Office, 16 State House Station, Augusta ME 04333-0016. Appointments may be scheduled by telephone at (207) 624-3519. The goal setting methodology is also available for viewing on the MaineDOT website: http://www.maine.gov/mdot/disadvantaged-business-enterprises/dbe-home.php.

Public comment will be accepted for 45 days following the last date of publication. The public comment period will be complete on August 28th, 2007. The goal will be submitted for approval to the FHWA on August 1st, 2007 with an update based upon public comment sent to FHWA on August 30th.

Comments on the goal will be accepted for 45 days from the date of this notice. Written comments should be addressed to Jackie LaPerriere, Maine Department of Transportation, Civil Rights Office, 16 State House Station, Augusta, Maine 04333-0016 or by e-mail at: jackie.laperriere@maine.gov.

Several interested stakeholders will be notified directly by e-mail of the goal publication, including Maine SBA, Associated Constructors of Maine, and ACEC, and Maine DBEs.

____ **Original Submission** **Page ___ of ___**

____ **Revision # _____**

MaineDOT CONTRACTOR'S DBE/SUBCONTRACTOR
PROPOSED UTILIZATION FORM

Low Bidder must furnish this form to Contracts Section Bid Opening day.

Contractor: _____ Telephone: _____ Ext. _____

Prepared by:_____ Fax: _____

BID PRICE: $_____ BID DATE: _____/_____/_____

FEDERAL PROJECT PIN # _____ PROJECT LOCATION: _____

TOTAL DBE _____ % PARTICIPATION FOR THIS SUBMISSION

WBE•	DBE•	Non DBE	Firm Name	Unit/Item Cost	Unit #	Description of Work & Item Number	Actual $ Value
						Total ›	

Contractors must make a good faith effort to include <u>Certified</u> DBE firms in all aspects of the project. If no DBE firms are to be part of this project, a detailed explanation is required. Attach supporting evidence to the maximum participation of DBEs on this project. This is a requirement. This evidence must include name of firm(s) contacted, date contacted, and outcome of solicitation.

Equal Opportunity Use:

Form received: ___/___/___ Verified by: _____

____ Accepted ____ Rejected _____

cc: ☐ Contracts ☐ Other _____

- **WBEs are non-minority women owned firms certified by MaineDOT**
- **DBEs are male and minority owned firms certified by MaineDOT**

For a complete list of certified firms go to <u>http://www.maine.gov/mdot</u>

Rev. 6/06

MaineDOT's

CIVIL RIGHTS OFFICE

To search for a specific work item, click on the binoculars, type in the word you want to search for and click on find. To go to the next selected item, click on the binoculars with the arrow.

MAINE DEPARTMENT OF TRANSPORTATION

CERTIFIED DISADVANTAGED AND WOMEN BUSINESS ENTERPRISE

DECEMBER 2005

Information is updated on an ongoing basis and can be retrieved by visiting our Website:
www.maine.gov/mdot/disadvantaged-business-enterprises/dbe-home.php

September 14, 2007

Vendor Registration

Prospective Bidders must register as a vendor with the Department of Administrative & Financial Services if the vendor is awarded a contract. Vendors will not be able to receive payment without first being registered. Vendors/Contractors will find information and register through the following link –
http://www.maine.gov/purchases/vendorinfo/vss.htm

STATE OF MAINE DEPARTMENT OF TRANSPORTATION
NOTICE TO CONTRACTORS

Sealed Bids addressed to the Maine Department of Transportation, Augusta, Maine 04333 and endorsed on the wrapper "Bids for Highway Reconstruction in the town of Kittery" will be received from contractors at the Reception Desk, Maine DOT Building, Child Street, Augusta, Maine, until 11:00 o'clock A.M. (prevailing time) on May 28, 2008, and at that time and place publicly opened and read. Bids will be accepted from contractors prequalified by the Department of Transportation for Highway Construction projects. All other Bids may be rejected. **We now accept electronic bids for those bid packages posted on the bidx.com website. Electronic bids do not have to be accompanied by paper bids. Please note: the Department will accept a facsimile of the bid bond; however, the original bid bond must then be received at the MDOT Contract Section within 72 hours of the bid opening. Until further notice,, dual bids (one paper, one electronic) will be accepted, with the paper copy taking precedence.**

Description: Maine Federal Aid Project No. STP-1158(400)X, PIN. 11584.00

Location: In York County, project is located on US. Rte.1 from approx. Love Lane extending northerly approx. 0.88 mi. to the Rotary.

Outline of Work: Grading, drainage, base, hot mix asphalt, guardrail, curb, planting trees and shrubs, sidewalk options, water and sewer utility work, and other incidental work.

The basis of award will be Section 001 with the selected Sidewalk Option

For general information regarding Bidding and Contracting procedures, contact Scott Bickford at (207)624-3410. Our webpage at http://www.maine.gov/mdot/contractor-consultant-information/contractor_cons.php contains a copy of the schedule of items, Plan Holders List, written portions of bid amendments (not drawings), and bid results. For Project-specific information fax all questions to Project Manager Ernie Martin at (207)624-3431. Questions received after 12:00 noon of Monday prior to bid date will not be answered. Bidders shall not contact any other Departmental staff for clarification of Contract provisions, and the Department will not be responsible for any interpretations so obtained. Hearing impaired persons may call the Telecommunication Device for the Deaf at 888-516-9364.

Plans, specifications and bid forms may be seen at the Maine DOT Building in Augusta, Maine and at the Department of Transportation's Regional Office in Scarborough. They may be purchased from the Department between the hours of 8:00 a.m. to 4:30 p.m. by cash, credit card (Visa/Mastercard) or check payable to Treasurer, State of Maine sent to Maine Department of Transportation, Attn.: Mailroom, 16 State House Station, Augusta, Maine 04333-0016. They also may be purchased by telephone at (207) 624-3536 between the hours of 8:00 a.m. to 4:30 p.m. Full size plans $130.00 ($138.00 by mail), Half size plans $65.00 ($69.00 by mail), Bid Book $10 ($13 by mail), Single Sheets $2, payment in advance, all non-refundable.

Each Bid must be made upon blank forms provided by the Department and must be accompanied by a bid bond at 5% of the bid amount or an official bank check, cashier's check, certified check, certificate of deposit, or United States postal money order in the amount of $100,000.00 payable to Treasurer, State of Maine as a Bid guarantee. A Contract Performance Surety Bond and a Contract Payment Surety Bond, each in the amount of 100 percent of the Contract price, will be required of the successful Bidder.

This Contract is subject to all applicable Federal Laws. This contract is subject to compliance with the Disadvantaged Business Enterprise program requirements as set forth by the Maine Department of Transportation.

All work shall be governed by "State of Maine, Department of Transportation, Standard Specifications, Revision of December 2002", price $10 [$13 by mail], and Standard Details, Revision of December 2002, price $20 [$25 by mail]. Standard Detail updates found at http://www.maine.gov/mdot/contractor-consultant-information/contractor_cons.php

The right is hereby reserved to the MDOT to reject any or all bids.

Augusta, Maine
May 7, 2008

STATE OF MAINE
JOHN E. DORITY
No. 2093
LICENSED
PROFESSIONAL ENGINEER

JOHN E. DORITY
CHIEF ENGINEER

Kittery
11584.00
August 3, 2004
Supercedes March 17, 2004

SPECIAL PROVISION 102.7.3
ACKNOWLEDGMENT OF BID AMENDMENTS

With this form, the Bidder acknowledges its responsibility to check for all Amendments to the Bid Package. For each Project under Advertisement, Amendments are located at http://www.maine.gov/mdot/comprehensive-list-projects/project-information.php It is the responsibility of the Bidder to determine if there are Amendments to the Project, to download them, to incorporate them into their Bid Package, and to reference the Amendment number and the date on the form below. The Maine DOT will not post Bid Amendments any later than noon the day before Bid opening without individually notifying all the planholders.

Amendment Number	Date

The Contractor, for itself, its successors and assigns, hereby acknowledges that it has received all of the above referenced Amendments to the Bid Package.

CONTRACTOR

_____
Date

_____
Signature of authorized representative

_____
(Name and Title Printed)

CONTRACT ID: 011584.00 PROJECT(S): STP-1158(400)X

CONTRACTOR :_____

LINE NO	ITEM DESCRIPTION	APPROX. QUANTITY AND UNITS	UNIT PRICE DOLLARS	UNIT PRICE CTS	BID AMOUNT DOLLARS	BID AMOUNT CTS
	SECTION 0001 PROJECT ITEMS					
0010	201.11 CLEARING	1.000 AC				
0020	201.23 REMOVING SINGLE TREE TOP ONLY	6.000 EA				
0030	201.24 REMOVING STUMP	6.000 EA				
0040	202.11 REMOVING PORTLAND CEMENT CONCRETE PAVEMENT	13700.000 SY				
0050	202.15 REMOVING MANHOLE OR CATCH BASIN	9.000 EA				
0060	202.202 REMOVING PAVEMENT SURFACE	18600.000 SY				
0070	203.20 COMMON EXCAVATION	16200.000 CY				
0080	203.21 ROCK EXCAVATION	290.000 CY				
0090	203.211 PRESPLITTING ROCK	660.000 LF				
0100	203.25 GRANULAR BORROW	3895.000 CY				

CONTRACT ID: 011584.00 PROJECT(S): STP-1158(400)X

CONTRACTOR :_____

LINE NO	ITEM DESCRIPTION	APPROX. QUANTITY AND UNITS	UNIT PRICE DOLLARS	UNIT PRICE CTS	BID AMOUNT DOLLARS	BID AMOUNT CTS
0110	203.26 GRAVEL BORROW	200.000 CY				
0120	206.061 STRUCTURAL EARTH EXCAVATION - DRAINAGE AND MINOR STRUCTURES, BELOW GRADE	50.000 CY				
0130	206.07 STRUCTURAL ROCK EXCAVATION - DRAINAGE AND MINOR STRUCTURES	1175.000 CY				
0140	304.10 AGGREGATE SUBBASE COURSE - GRAVEL	2765.000 CY				
0150	403.208 HOT MIX ASPHALT 12.5 MM HMA SURFACE	1650.000 T				
0160	403.213 HOT MIX ASPHALT 12.5 MM HMA BASE	3100.000 T				
0170	409.15 BITUMINOUS TACK COAT - APPLIED	790.000 G				
0180	603.157 12 INCH PVC PIPE	10.000 LF				
0190	603.159 12 INCH CULVERT PIPE OPTION III	92.000 LF				
0200	603.169 15 INCH CULVERT PIPE OPTION III	93.000 LF				

CONTRACT ID: 011584.00 PROJECT(S): STP-1158(400)X

CONTRACTOR :_____

LINE NO	ITEM DESCRIPTION	APPROX. QUANTITY AND UNITS	UNIT PRICE DOLLARS	UNIT PRICE CTS	BID AMOUNT DOLLARS	BID AMOUNT CTS
0210	603.175 18 INCH REINFORCED CONCRETE PIPE CLASS III	67.000 LF				
0220	603.177 18 INCH PVC PIPE	8.000 LF				
0230	603.179 18 INCH CULVERT PIPE OPTION III	47.000 LF				
0240	603.189 21 INCH CULVERT PIPE OPTION III	11.000 LF				
0250	603.195 24 INCH REINFORCED CONCRETE PIPE CLASS III	99.000 LF				
0260	603.199 24 INCH CULVERT PIPE OPTION III	160.000 LF				
0270	604.072 CATCH BASIN TYPE A1-C	25.000 EA				
0280	604.092 CATCH BASIN TYPE B1-C	6.000 EA				
0290	604.15 MANHOLE	11.000 EA				
0300	604.16 ALTERING CATCH BASIN TO MANHOLES	2.000 EA				
0310	604.18 ADJUSTING MANHOLE OR CATCH BASIN TO GRADE	3.000 EA				

CONTRACT ID: 011584.00 PROJECT(S): STP-1158(400)X

CONTRACTOR :_____

LINE NO	ITEM DESCRIPTION	APPROX. QUANTITY AND UNITS	UNIT PRICE DOLLARS	UNIT PRICE CTS	BID AMOUNT DOLLARS	BID AMOUNT CTS
0320	604.182 CLEAN EXISTING CATCH BASIN AND MANHOLE	3.000 EA				
0330	604.243 CATCH BASIN TYPE F3-C	1.000 EA				
0340	604.245 CATCH BASIN TYPE F4-C	3.000 EA				
0350	604.247 CATCH BASIN TYPE F5-C	1.000 EA				
0360	604.252 CATCH BASIN TYPE A5-C	7.000 EA				
0370	604.262 CATCH BASIN TYPE B5-C	2.000 EA				
0380	605.09 6 INCH UNDERDRAIN TYPE B	2545.000 LF				
0390	605.10 6 INCH UNDERDRAIN OUTLET	55.000 LF				
0400	605.11 12 INCH UNDERDRAIN TYPE C	3040.000 LF				
0410	605.12 15 INCH UNDERDRAIN TYPE C	1735.000 LF				
0420	605.13 18 INCH UNDERDRAIN TYPE C	635.000 LF				

CONTRACT ID: 011584.00 PROJECT(S): STP-1158(400)X

CONTRACTOR :_____

LINE NO	ITEM DESCRIPTION	APPROX. QUANTITY AND UNITS	UNIT PRICE DOLLARS	UNIT PRICE CTS	BID AMOUNT DOLLARS	BID AMOUNT CTS
0430	606.178 GUARDRAIL BEAM	30.000 LF				
0440	606.23 GUARDRAIL TYPE 3C - SINGLE RAIL	888.000 LF				
0450	606.232 GUARDRAIL TYPE 3C - OVER 15 FOOT RADIUS	63.000 LF				
0460	606.259 ANCHORAGE ASSEMBLY	2.000 EA				
0470	606.35 GUARDRAIL DELINEATOR POST	1.000 EA				
0480	606.353 REFLECTORIZED FLEXIBLE GUARDRAIL MARKER	12.000 EA				
0490	606.47 SINGLE WOOD POST	12.000 EA				
0500	606.79 GUARDRAIL 350 FLARED TERMINAL	4.000 EA				
0510	606.80 BURIED-IN-SLOPE GUARDRAIL END	2.000 EA				
0520	607.163 CHAIN LINK FENCE - 4 FOOT P.V.C. COATED	800.000 LF				
0530	607.35 BRACING ASSEMBLY CHAIN LINK FENCE PVC COATED	10.000 EA				

CONTRACT ID: 011584.00 PROJECT(S): STP-1158(400)X

CONTRACTOR :_____

LINE NO	ITEM DESCRIPTION	APPROX. QUANTITY AND UNITS	UNIT PRICE DOLLARS	UNIT PRICE CTS	BID AMOUNT DOLLARS	BID AMOUNT CTS
0540	608.08 REINFORCED CONCRETE SIDEWALK	1630.000 SY				
0550	608.26 CURB RAMP DETECTABLE WARNING FIELD	180.000 SF				
0560	609.11 VERTICAL CURB TYPE 1	5685.000 LF				
0570	609.12 VERTICAL CURB TYPE 1 - CIRCULAR	386.000 LF				
0580	609.234 TERMINAL CURB TYPE 1 - 4 FOOT	72.000 EA				
0590	609.237 TERMINAL CURB TYPE 1 - 7 FOOT	69.000 EA				
0600	609.2371 TERMINAL CURB TYPE 1- 7 FT - CIRCULAR	19.000 EA				
0610	609.26 CURB TRANSITION SECTION B TYPE 1	2.000 EA				
0620	609.34 CURB TYPE 5	222.000 LF				
0630	609.35 CURB TYPE 5 - CIRCULAR	98.000 LF				
0640	609.38 RESET CURB TYPE 1	50.000 LF				

CONTRACT ID: 011584.00 PROJECT(S): STP-1158(400)X

CONTRACTOR :_____

LINE NO	ITEM DESCRIPTION	APPROX. QUANTITY AND UNITS	UNIT PRICE DOLLARS	UNIT PRICE CTS	BID AMOUNT DOLLARS	BID AMOUNT CTS
0650	610.08 PLAIN RIPRAP	35.000 CY				
0660	613.319 EROSION CONTROL BLANKET	250.000 SY				
0670	615.07 LOAM	925.000 CY				
0680	618.1301 SEEDING METHOD NUMBER 1 - PLAN QUANTITY	50.000 UN				
0690	618.1401 SEEDING METHOD NUMBER 2 - PLAN QUANTITY	28.000 UN				
0700	618.20 ANNUAL RYE GRASS SEED	4.000 LB				
0710	619.12 MULCH	78.000 UN				
0720	619.1401 EROSION CONTROL MIX	10.000 CY				
0730	620.54 STABILIZATION GEOTEXTILE	1600.000 SY				
0740	620.58 EROSION CONTROL GEOTEXTILE	65.000 SY				
0750	621.037 EVERGREEN TREES (5 FOOT - 6 FOOT) GROUP A	3.000 EA				

CONTRACT ID: 011584.00 PROJECT(S): STP-1158(400)X

CONTRACTOR :_____

LINE NO	ITEM DESCRIPTION	APPROX. QUANTITY AND UNITS	UNIT PRICE DOLLARS	UNIT PRICE CTS	BID AMOUNT DOLLARS	BID AMOUNT CTS
0760	621.038 EVERGREEN TREES (5 FOOT - 6 FOOT) GROUP B	3.000 EA				
0770	621.186 MEDIUM DECIDUOUS TREES (8 FOOT - 10 FOOT) GROUP C	3.000 EA				
0780	621.246 LARGE DECIDUOUS TREES (3 FOOT - 4 FOOT) GROUP A	8.000 EA				
0790	621.267 LARGE DECIDUOUS TREE (1.75 INCH - 2 INCH CALIPER) GROUP A	3.000 EA				
0800	621.389 DWARF EVERGREENS (15 INCH - 18 INCH) GROUP A	30.000 EA				
0810	621.54 DECIDUOUS SHRUBS (18 INCH - 24 INCH) GROUP A	60.000 EA				
0820	621.546 DECIDUOUS SHRUBS (2 FOOT - 3 FOOT) GROUP A	60.000 EA				
0830	621.552 DECIDUOUS SHRUBS (3 FOOT - 4 FOOT) GROUP A	6.000 EA				
0840	621.558 DECIDUOUS SHRUBS (4 FOOT - 5 FOOT) GROUP A	12.000 EA				
0850	621.71 HERBACEOUS PERENNIALS GROUP A	60.000 EA				
0860	627.711 WHITE OR YELLOW PAINTED PAVEMENT MARKING LINE (PLAN QUANTITY)	13500.000 LF				

CONTRACT ID: 011584.00 PROJECT(S): STP-1158(400)X

CONTRACTOR :_____

LINE NO	ITEM DESCRIPTION	APPROX. QUANTITY AND UNITS	UNIT PRICE DOLLARS	UNIT PRICE CTS	BID AMOUNT DOLLARS	BID AMOUNT CTS
0870	627.75 WHITE OR YELLOW PAVEMENT AND CURB MARKING	650.000 SF				
0880	627.76 TEMPORARY PVMT. MARK LINE, W OR YELLOW	LUMP	LUMP			
0890	629.05 HAND LABOR, STRAIGHT TIME	20.000 HR				
0900	631.12 ALL PURPOSE EXCAVATOR (INCLUDING OPERATOR)	15.000 HR				
0910	631.172 TRUCK - LARGE (INCLUDING OPERATOR)	15.000 HR				
0920	631.18 CHAIN SAW RENTAL (INCLUDING OPERATOR)	5.000 HR				
0930	631.20 STUMP CHIPPER (INCLUDING OPERATOR)	5.000 HR				
0940	631.22 FRONT END LOADER (INCLUDING OPERATOR)	10.000 HR				
0950	631.32 CULVERT CLEANER (INCLUDING OPERATOR)	10.000 HR				
0960	635.31 PREFAB CONCRETE BLOCK GRAVITY WALL	285.000 SF				
0970	639.18 FIELD OFFICE TYPE A	1.000 EA				

CONTRACT ID: 011584.00 PROJECT(S): STP-1158(400)X

CONTRACTOR :_____

LINE NO	ITEM DESCRIPTION	APPROX. QUANTITY AND UNITS	UNIT PRICE DOLLARS	UNIT PRICE CTS	BID AMOUNT DOLLARS	BID AMOUNT CTS
0980	652.31 TYPE I BARRICADE	50.000 EA				
0990	652.311 TYPE II BARRICADE	25.000 EA				
1000	652.33 DRUM	150.000 EA				
1010	652.34 CONE	100.000 EA				
1020	652.35 CONSTRUCTION SIGNS	510.000 SF				
1030	652.361 MAINTENANCE OF TRAFFIC CONTROL DEVICES	LUMP	LUMP			
1040	652.38 FLAGGER	7548.270 HR				
1050	656.75 TEMPORARY SOIL EROSION AND WATER POLLUTION CONTROL	LUMP	LUMP			
1060	657.24 SEEDING PITS	65.000 UN				
1070	658.20 ACRYLIC LATEX COLOR FINISH, GREEN	475.000 SY				
1080	659.10 MOBILIZATION	LUMP	LUMP			

CONTRACT ID: 011584.00 PROJECT(S): STP-1158(400)X

CONTRACTOR :_____

LINE NO	ITEM DESCRIPTION	APPROX. QUANTITY AND UNITS	UNIT PRICE DOLLARS	UNIT PRICE CTS	BID AMOUNT DOLLARS	BID AMOUNT CTS
1090	801.181 12 " D.I. SANITARY SEWER	LUMP	LUMP			
1100	803.01 TEST PITS	10.000 EA				
1110	812.162 ADJUSTING SEWER MANHOLE TO GRADE	24.000 EA				
1120	822.322 6 INCH DUCTILE IRON PIPE	200.000 LF				
1130	822.34 8 INCH CLASS 52 DUCTILE IRON PIPE	320.000 LF				
1140	822.36 12 INCH DUCTILE IRON PIPE	4620.000 LF				
1150	823.31 12 INCH GATE VALVE	4.000 EA				
1160	823.325 8 INCH GATE VALVE	4.000 EA				
1170	823.331 6 INCH GATE VALVE	8.000 EA				
1180	823.34 BLOW OFF VALVE ASSEMBLY	1.000 EA				
1190	824.30 FIRE HYDRANT (ASSEMBLY)	5.000 EA				

CONTRACT ID: 011584.00 PROJECT(S): STP-1158(400)X

CONTRACTOR :_____

LINE NO	ITEM DESCRIPTION	APPROX. QUANTITY AND UNITS	UNIT PRICE DOLLARS	UNIT PRICE CTS	BID AMOUNT DOLLARS	BID AMOUNT CTS
1200	824.31 REMOVE FIRE HYDRANT	5.000 EA				
1210	825.32 2 INCH CORPORATION	1.000 EA				
1220	825.322 2" CURB STOP	2.000 EA				
1230	825.33 1 INCH CORP STOP	54.000 EA				
1240	825.331 1" CURB STOP	54.000 EA				
1250	825.42 2" COPPER SERVICE	20.000 LF				
1260	825.43 1" COPPER SERVICE	1620.000 LF				
1270	827.303 UNSUITABLE MAT. BELOW TRENCH GRADE	102.670 CY				
1280	827.304 TRENCH ROCK EXCAVATION	600.000 CY				
	SECTION 0001 TOTAL					.

SECTION 0002 OPTION 1 - HMA SIDEWALK
ALT GROUP OS1

CONTRACT ID: 011584.00 PROJECT(S): STP-1158(400)X

CONTRACTOR :_____

LINE NO	ITEM DESCRIPTION	APPROX. QUANTITY AND UNITS	UNIT PRICE DOLLARS	UNIT PRICE CTS	BID AMOUNT DOLLARS	BID AMOUNT CTS
1290	304.09 AGGREGATE BASE COURSE - CRUSHED	11400.000 CY				
1300	403.209 HOT MIX ASPHALT 9.5 MM HMA (SIDEWALKS, DRIVES, INCIDENTALS)	960.000 T				
	SECTION 0002 TOTAL					.

SECTION 0003 OPTION 2 - CONCRETE SIDEWALK
ALT GROUP OS2

1310	304.09 AGGREGATE BASE COURSE - CRUSHED	11280.000 CY				
1320	403.209 HOT MIX ASPHALT 9.5 MM HMA (SIDEWALKS, DRIVES, INCIDENTALS)	770.000 T				
1330	608.08 REINFORCED CONCRETE SIDEWALK	1680.000 SY				
	SECTION 0003 TOTAL					
	TOTAL BID					

CONTRACT AGREEMENT, OFFER & AWARD

AGREEMENT made on the date last signed below, by and between the State of Maine, acting through and by its Department of Transportation (Department), an agency of state government with its principal administrative offices located at Child Street Augusta, Maine, with a mailing address at 16 State House Station, Augusta, Maine 04333-0016, and _____ a corporation or other legal entity organized under the laws of the State of _____, with its principal place of business located at _____ _____

The Department and the Contractor, in consideration of the mutual promises set forth in this Agreement (the "Contract"), hereby agree as follows:

A. The Work.

The Contractor agrees to complete all Work as specified or indicated in the Contract including Extra Work in conformity with the Contract, PIN No. **11584.00** for **Highway Reconstruction** in the town of **Kittery** County of **York** Maine. The Work includes construction, maintenance during construction, warranty as provided in the Contract, and other incidental work.

The Contractor shall be responsible for furnishing all supervision, labor, equipment, tools supplies, permanent materials and temporary materials required to perform the Work including construction quality control including inspection, testing and documentation, all required documentation at the conclusion of the project, warranting its work and performing all other work indicated in the Contract.

The Department shall have the right to alter the nature and extent of the Work as provided in the Contract; payment to be made as provided in the same.

B. Time.

The Contractor agrees to complete all Work, except warranty work, on or before **June 19, 2009** Further, the Department may deduct from moneys otherwise due the Contractor, not as a penalty, but as Liquidated Damages in accordance with Sections 107.7 and 107.8 of the State of Maine Department of Transportation Standard Specifications, Revision of December 2002 and related Special Provisions.

C. Price.

The quantities given in the Schedule of Items of the Bid Package will be used as the basis for determining the original Contract amount and for determining the amounts of the required Performance Surety Bond and Payment Surety Bond, and that the amount of this offer is

Section 0001 $_____

Section 0002 $_____

Section 0003 $_____

Performance Bond and Payment Bond each being 100% of the amount awarded under this Contract (see award amount in Section G below).

D. Contract.

This Contract, which may be amended, modified, or supplemented in writing only, consists of the Contract documents as defined in the Plans, Standard Specifications, Revision of December 2002, Standard Details Revision of December 2002 as updated through advertisement, Supplemental Specifications, Special Provisions, Contract Agreement; and Contract Bonds. It is agreed and understood that this Contract will be governed by the documents listed above.

E. Certifications.

By signing below, the Contractor hereby certifies that to the best of the Contractor's knowledge and belief:

1. All of the statements, representations, covenants, and/or certifications required or set forth in the Bid and the Bid Documents, including those in Appendix A to Division 100 of the Standard Specifications Revision of December 2002 (Federal Contract Provisions Supplement), and the Contract are still complete and accurate as of the date of this Agreement.

2. The Contractor knows of no legal, contractual, or financial impediment to entering into this Contract.

3. The person signing below is legally authorized by the Contractor to sign this Contract on behalf of the Contractor and to legally bind the Contractor to the terms of the Contract.

F. Offer.

The undersigned, having carefully examined the site of work, the Plans, Standard Specifications Revision of December 2002, Standard Details Revision of December 2002 as updated through advertisement, Supplemental Specifications, Special Provisions, Contract Agreement; and Contract Bonds contained herein for construction of: **PIN. 11584.00 - Highway Reconstruction - in the town of Kittery**, State of Maine, on which bids will be received until the time specified in the "Notice to Contractors" do(es) hereby bid and offer to enter into this contract to supply all the materials, tools, equipment and labor to construct the whole of the Work in strict accordance with the terms and conditions of this Contract at the unit prices in the attached "Schedule of Items".

The Offeror agrees to perform the work required at the price specified above and in accordance with the bids provided in the attached "Schedule of Items" in strict accordance with the terms of this solicitation, and to provide the appropriate insurance and bonds if this offer is accepted by the Government in writing.

As Offeror also agrees:

First: To do any extra work, not covered by the attached "Schedule of Items", which may be ordered by the Resident, and to accept as full compensation the amount determined upon a "Force Account" basis as provided in the Standard Specifications, Revision of December 2002, and as addressed in the contract documents.

Second: That the bid bond at 5% of the bid amount or the official bank check, cashier's check, certificate of deposit or U. S. Postal Money Order in the amount given in the "Notice to Contractors", payable to the Treasurer of the State of Maine and accompanying this bid, shall be forfeited, as liquidated damages, if in case this bid is accepted, and the undersigned shall fail to abide by the terms and conditions of the offer and fail to furnish satisfactory insurance and Contract bonds under the conditions stipulated in the Specifications within 15 days of notice of intent to award the contract.

Third: To begin the Work as stated in Section 107.2 of the Standard Specifications Revision of December 2002 and complete the Work within the time limits given in the Special Provisions of this Contract.

Fourth: The Contractor will be bound to the Disadvantaged Business Enterprise (DBE) Requirements contained in the attached Notice (Additional Instructions to Bidders) and submit a completed Contractor's Disadvantaged Business Enterprise Utilization Plan by 4:30pm on the day of bid opening to the Contracts Engineer.

Fifth: That this offer shall remain open for 30 calendar days after the date of opening of bids.

Sixth: The Bidder hereby certifies, to the best of its knowledge and belief that: the Bidder has not, either directly or indirectly, entered into any agreement, participated in any collusion, or otherwise taken any action in restraint of competitive bidding in connection with its bid, and its subsequent contract with the Department.

IN WITNESS WHEREOF, the Contractor, for itself, its successors and assigns, hereby execute two duplicate originals of this Agreement and thereby binds itself to all covenants, terms, and obligations contained in the Contract Documents.

CONTRACTOR

_____	_____
Date	(Signature of Legally Authorized Representative of the Contractor)
_____	_____
Witness	(Name and Title Printed)

G. Award.

Your offer is hereby accepted for (see checked boxes):

Section 0001 ❑
Section 0002 ❑
Section 0003 ❑

Contract Amount: _____

This award consummates the Contract, and the documents referenced herein.

MAINE DEPARTMENT OF TRANSPORTATION

_____	_____
Date	By: David A. Cole, Commissioner
_____	
Witness	

CONTRACT AGREEMENT, OFFER & AWARD

AGREEMENT made on the date last signed below, by and between the State of Maine, acting through and by its Department of Transportation (Department), an agency of state government with its principal administrative offices located at Child Street Augusta, Maine, with a mailing address at 16 State House Station, Augusta, Maine 04333-0016, and _____ a corporation or other legal entity organized under the laws of the State of _____, with its principal place of business located at _____ _____

The Department and the Contractor, in consideration of the mutual promises set forth in this Agreement (the "Contract"), hereby agree as follows:

A. The Work.

The Contractor agrees to complete all Work as specified or indicated in the Contract including Extra Work in conformity with the Contract, PIN No. **11584.00** for **Highway Reconstruction** in the town of **Kittery** County of **York** Maine. The Work includes construction, maintenance during construction, warranty as provided in the Contract, and other incidental work.

The Contractor shall be responsible for furnishing all supervision, labor, equipment, tools supplies, permanent materials and temporary materials required to perform the Work including construction quality control including inspection, testing and documentation, all required documentation at the conclusion of the project, warranting its work and performing all other work indicated in the Contract.

The Department shall have the right to alter the nature and extent of the Work as provided in the Contract; payment to be made as provided in the same.

B. Time.

The Contractor agrees to complete all Work, except warranty work, on or before **June 19, 2009** Further, the Department may deduct from moneys otherwise due the Contractor, not as a penalty, but as Liquidated Damages in accordance with Sections 107.7 and 107.8 of the State of Maine Department of Transportation Standard Specifications, Revision of December 2002 and related Special Provisions.

C. Price.

The quantities given in the Schedule of Items of the Bid Package will be used as the basis for determining the original Contract amount and for determining the amounts of the required Performance Surety Bond and Payment Surety Bond, and that the amount of this offer is

Section 0001 $_____

Section 0002 $_____

Section 0003 $_____

Performance Bond and Payment Bond each being 100% of the amount awarded under this Contract (see award amount in Section G below).

D. Contract.

This Contract, which may be amended, modified, or supplemented in writing only, consists of the Contract documents as defined in the Plans, Standard Specifications, Revision of December 2002, Standard Details Revision of December 2002 as updated through advertisement, Supplemental Specifications, Special Provisions, Contract Agreement; and Contract Bonds. It is agreed and understood that this Contract will be governed by the documents listed above.

E. Certifications.

By signing below, the Contractor hereby certifies that to the best of the Contractor's knowledge and belief:

1. All of the statements, representations, covenants, and/or certifications required or set forth in the Bid and the Bid Documents, including those in Appendix A to Division 100 of the Standard Specifications Revision of December 2002 (Federal Contract Provisions Supplement), and the Contract are still complete and accurate as of the date of this Agreement.

2. The Contractor knows of no legal, contractual, or financial impediment to entering into this Contract.

3. The person signing below is legally authorized by the Contractor to sign this Contract on behalf of the Contractor and to legally bind the Contractor to the terms of the Contract.

F. Offer.

The undersigned, having carefully examined the site of work, the Plans, Standard Specifications Revision of December 2002, Standard Details Revision of December 2002 as updated through advertisement, Supplemental Specifications, Special Provisions, Contract Agreement; and Contract Bonds contained herein for construction of: **PIN. 11584.00 - Highway Reconstruction - in the town of Kittery**, State of Maine, on which bids will be received until the time specified in the "Notice to Contractors" do(es) hereby bid and offer to enter into this contract to supply all the materials, tools, equipment and labor to construct the whole of the Work in strict accordance with the terms and conditions of this Contract at the unit prices in the attached "Schedule of Items".

The Offeror agrees to perform the work required at the price specified above and in accordance with the bids provided in the attached "Schedule of Items" in strict accordance with the terms of this solicitation, and to provide the appropriate insurance and bonds if this offer is accepted by the Government in writing.

As Offeror also agrees:

First: To do any extra work, not covered by the attached "Schedule of Items", which may be ordered by the Resident, and to accept as full compensation the amount determined upon a "Force Account" basis as provided in the Standard Specifications, Revision of December 2002, and as addressed in the contract documents.

Second: That the bid bond at 5% of the bid amount or the official bank check, cashier's check, certificate of deposit or U. S. Postal Money Order in the amount given in the "Notice to Contractors", payable to the Treasurer of the State of Maine and accompanying this bid, shall be forfeited, as liquidated damages, if in case this bid is accepted, and the undersigned shall fail to abide by the terms and conditions of the offer and fail to furnish satisfactory insurance and Contract bonds under the conditions stipulated in the Specifications within 15 days of notice of intent to award the contract.

Third: To begin the Work as stated in Section 107.2 of the Standard Specifications Revision of December 2002 and complete the Work within the time limits given in the Special Provisions of this Contract.

Fourth: The Contractor will be bound to the Disadvantaged Business Enterprise (DBE) Requirements contained in the attached Notice (Additional Instructions to Bidders) and submit a completed Contractor's Disadvantaged Business Enterprise Utilization Plan by 4:30pm on the day of bid opening to the Contracts Engineer.

Fifth: That this offer shall remain open for 30 calendar days after the date of opening of bids.

Sixth: The Bidder hereby certifies, to the best of its knowledge and belief that: the Bidder has not, either directly or indirectly, entered into any agreement, participated in any collusion, or otherwise taken any action in restraint of competitive bidding in connection with its bid, and its subsequent contract with the Department.

IN WITNESS WHEREOF, the Contractor, for itself, its successors and assigns, hereby execute two duplicate originals of this Agreement and thereby binds itself to all covenants, terms, and obligations contained in the Contract Documents.

CONTRACTOR

_____	_____
Date	(Signature of Legally Authorized Representative of the Contractor)
_____	_____
Witness	(Name and Title Printed)

G. Award.

Your offer is hereby accepted for (see checked boxes):

Section 0001 ❑
Section 0002 ❑
Section 0003 ❑

Contract Amount: _____

This award consummates the Contract, and the documents referenced herein.

MAINE DEPARTMENT OF TRANSPORTATION

_____	_____
Date	By: David A. Cole, Commissioner
_____	
Witness	

CONTRACT AGREEMENT, OFFER & AWARD

AGREEMENT made on the date last signed below, by and between the State of Maine, acting through and by its Department of Transportation (Department), an agency of state government with its principal administrative offices located at Child Street Augusta, Maine, with a mailing address at 16 State House Station, Augusta, Maine 04333-0016, and **(Name of the firm bidding the job)** a corporation or other legal entity organized under the laws of the State of Maine, with its principal place of business located at **(address of the firm bidding the job)**

The Department and the Contractor, in consideration of the mutual promises set forth in this Agreement (the "Contract"), hereby agree as follows:

SAMPLE

A. The Work.

The Contractor agrees to complete all Work as specified or indicated in the Contract including Extra Work in conformity with the Contract, PIN No. **1224.00**, for the **Hot Mix Asphalt Overlay** in the town/city of **West Eastport**, County of **Washington**, Maine. The Work includes construction, maintenance during construction, warranty as provided in the Contract, and other incidental work.

The Contractor shall be responsible for furnishing all supervision, labor, equipment, tools supplies, permanent materials and temporary materials required to perform the Work including construction quality control including inspection, testing and documentation, all required documentation at the conclusion of the project, warranting its work and performing all other work indicated in the Contract.

The Department shall have the right to alter the nature and extent of the Work as provided in the Contract; payment to be made as provided in the same.

B. Time.

The Contractor agrees to complete all Work, except warranty work, on or before **November 15**, 2003**.** Further, the Department may deduct from moneys otherwise due the Contractor, not as a penalty, but as Liquidated Damages in accordance with Sections 107.7 and 107.8 of the State of Maine Department of Transportation Standard Specifications, Revision of December 2002.

C. Price.

The quantities given in the Schedule of Items of the Bid Package will be used as the basis for determining the original Contract amount and for determining the amounts of the required Performance Surety Bond and Payment Surety Bond, and that the amount of this offer is **____(Place bid here in alphabetical form such as One Hundred and Two dollars and 10 cents)** **$_ (repeat bid here in numerical terms, such as $102.10)**_____ Performance Bond and Payment Bond each being 100% of the amount of this Contract.

D. Contract.

This Contract, which may be amended, modified, or supplemented in writing only, consists of the Contract documents as defined in the Plans, Standard Specifications, Revision of December 2002, Standard Details Revision of December 2002, Supplemental Specifications, Special Provisions, Contract Agreement; and Contract Bonds. It is agreed and understood that this Contract will be governed by the documents listed above.

E. Certifications.

By signing below, the Contractor hereby certifies that to the best of the Contractor's knowledge and belief:

1. All of the statements, representations, covenants, and/or certifications required or set forth in the Bid and the Bid Documents, including those in Appendix A to Division 100 of the Standard Specifications Revision of December 2002 (Federal Contract Provisions Supplement), and the Contract are still complete and accurate as of the date of this Agreement.

2. The Contractor knows of no legal, contractual, or financial impediment to entering into this Contract.

3. The person signing below is legally authorized by the Contractor to sign this Contract on behalf of the Contractor and to legally bind the Contractor to the terms of the Contract.

F. Offer.

SAMPLE

The undersigned, having carefully examined the site of work, the Plans, Standard Specifications, Revision of December 2002, Standard Details Revision of December 2002, Supplemental Specifications, Special Provisions, Contract Agreement; and Contract Bonds contained herein for construction of:

PIN 1234.00 West Eastport, Hot Mix Asphalt Overlay,

State of Maine, on which bids will be received until the time specified in the "Notice to Contractors" do(es) hereby bid and offer to enter into this contract to supply all the materials, tools, equipment and labor to construct the whole of the Work in strict accordance with the terms and conditions of this Contract at the unit prices in the attached "Schedule of Items".

The Offeror agrees to perform the work required at the price specified above and in accordance with the bids provided in the attached "Schedule of Items" in strict accordance with the terms of this solicitation, and to provide the appropriate insurance and bonds if this offer is accepted by the Government in writing.

As Offeror also agrees:

First: To do any extra work, not covered by the attached "Schedule of Items", which may be ordered by the Resident, and to accept as full compensation the amount determined upon a "Force Account" basis as provided in the Standard Specifications, Revision of December 2002, and as addressed in the contract documents.

Second: That the bid bond at 5% of the bid amount or the official bank check, cashier's check, certificate of deposit or U. S. Postal Money Order in the amount given in the "Notice to Contractors", payable to the Treasurer of the State of Maine and accompanying this bid, shall be forfeited, as liquidated damages, if in case this bid is accepted, and the undersigned shall fail to abide by the terms and conditions of the offer and fail to furnish satisfactory insurance and Contract bonds under the conditions stipulated in the Specifications within 15 days of notice of intent to award the contract.

Third: To begin the Work on the date specified in the Engineer's "Notice to Commence Work" as stated in Section 107.2 of the Standard Specifications Revision of 2002 and complete the Work within the time limits given in the Special Provisions of this Contract.

Fourth: The Contractor will be bound to the Disadvantaged Business Enterprise (DBE) Requirements contained in the attached Notice (Additional Instructions to Bidders) and submit a completed Contractor's Disadvantaged Business Enterprise Utilization Plan by 4:30pm on the day of bid opening to the Contracts Engineer.

Fifth: That this offer shall remain open for 30 calendar days after the date of opening of bids.

SAMPLE

Sixth: The Bidder hereby certifies, to the best of its knowledge and belief that: the Bidder has not, either directly or indirectly, entered into any agreement, participated in any collusion, or otherwise taken any action in restraint of competitive bidding in connection with its bid, and its subsequent contract with the Department.

IN WITNESS WHEREOF, the Contractor, for itself, its successors and assigns, hereby execute two duplicate originals of this Agreement and thereby binds itself to all covenants, terms, and obligations contained in the Contract Documents.

CONTRACTOR

_____	**(Sign Here)**_____
Date	(Signature of Legally Authorized Representative of the Contractor)
____**(Witness Sign Here)**_____	**(Print Name Here)**_____
Witness	(Name and Title Printed)

SAMPLE

G. Award.

Your offer is hereby accepted. This award consummates the Contract, and the documents referenced herein.

MAINE DEPARTMENT OF TRANSPORTATION

_____	_____
Date	By: David A. Cole, Commissioner

_____
(Witness)

BOND # _____

CONTRACT PERFORMANCE BOND
(Surety Company Form)

KNOW ALL MEN BY THESE PRESENTS: That _____ _____ **and the State of** _____, as principal, and…….....,
a corporation duly organized under the laws of the State of ..... and having a usual place of business ....,
as Surety, are held and firmly bound unto the Treasurer of the State of Maine in the sum of _____ **and 00/100 Dollars ($)**, to be paid said Treasurer of the State of Maine or his successors in office, for which payment well and truly to be made, Principal and Surety bind themselves, their heirs, executors and administrators, successors and assigns, jointly and severally by these presents.

The condition of this obligation is such that if the Principal designated as Contractor in the Contract to construct Project Number _____ in the Municipality of _____ promptly and faithfully performs the Contract, then this obligation shall be null and void; otherwise it shall remain in full force and effect.

The Surety hereby waives notice of any alteration or extension of time made by the State of Maine.

Signed and sealed this ..... day of ....., 20….. .

WITNESSES:	SIGNATURES:
	CONTRACTOR:
Signature.....	.....….....
Print Name Legibly	Print Name Legibly ...…….....
	SURETY:
Signature	.....…….....
Print Name Legibly	Print Name Legibly .....
SURETY ADDRESS:	NAME OF LOCAL AGENCY:
.....	ADDRESS .....
.....	...…….....
.....	.....…….....
TELEPHONE.....	.....…….....

SAMPLE

BOND # _____

CONTRACT PAYMENT BOND
(Surety Company Form)

KNOW ALL MEN BY THESE PRESENTS: That _____ _____ **and the State of** _____, as principal, and.....…..... a corporation duly organized under the laws of the State of ..... and having a usual place of business in .....……., as Surety, are held and firmly bound unto the Treasurer of the State of Maine for the use and benefit of claimants as herein below defined, in the sum of _____ **and 00/100 Dollars ($)** for the payment whereof Principal and Surety bind themselves, their heirs, executors and administrators, successors and assigns, jointly and severally by these presents.

The condition of this obligation is such that if the Principal designated as Contractor in the Contract to construct Project Number _____ in the Municipality of _____ promptly satisfies all claims and demands incurred for all labor and material, used or required by him in connection with the work contemplated by said Contract, and fully reimburses the obligee for all outlay and expense which the obligee may incur in making good any default of said Principal, then this obligation shall be null and void; otherwise it shall remain in full force and effect.

A claimant is defined as one having a direct contract with the Principal or with a Subcontractor of the Principal for labor, material or both, used or reasonably required for use in the performance of the contract.

Signed and sealed this ..... day of ...……....., 20 ... .

WITNESS:	SIGNATURES:
	CONTRACTOR:
Signature…….....	.....….....
Print Name Legibly .....……..	Print Name Legibly ….....
	SURETY:
Signature.....	...….....
Print Name Legibly	Print Name Legibly ….....
SURETY ADDRESS:	NAME OF LOCAL AGENCY:
...….....	ADDRESS ….....
.....	…….....….....
TELEPHONE	…….....….....

SAMPLE

SPECIAL PROVISION
SECTION 102.3
EXAMINATION OF DOCUMENTS, SITE AND OTHER INFORMATION
(Geotechnical Information)

Geotechnical Information pertaining to this project has been collected and assembled. Bidders and Contractors are obligated to examine and, if necessary, obtain geotechnical information. Geotechnical Information is available at the Maine Department of Transportation office on Child Street, Augusta, Maine. Geotechnical Information will be provided to interested parties who request this information. Requests for this information should be directed to the Project Manager as outlined in the "Notice to Contractors".

The Department shall not be responsible for Bidder's and Contractor's interpretations of, or estimates or conclusions drawn from, the Geotechnical Information. Data provided may not be representative of the subsurface conditions between the boring locations.

This section does not diminish the duties imposed upon parties in Section 102 or in any other sections.

General Decision Number: ME080009 02/08/2008 ME9

Superseded General Decision Number: ME20070009

State: Maine

Construction Type: Highway

Counties: Aroostook, Franklin, Hancock, Kennebec, Knox, Lincoln, Oxford, Piscataquis, Sagadahoc, Somerset, Waldo and York Counties in Maine.

HIGHWAY CONSTRUCTION PROJECTS excluding major bridging (for example: bascule, suspension and spandrel arch bridges; those bridging waters presently navigating or to be navigatable; and those involving marine construction in any degree); tunnels, building structures in rest area projects and railroad construction.

Modification Number	Publication Date
0	02/08/2008

* ENGI0004-015 04/01/2007

	Rates	Fringes
Power equipment operators:		
Pavers	$ 17.58	8.30
Rollers	$ 17.58	8.30

SUME2000-008 10/24/2000

	Rates	Fringes
Carpenter	$ 11.60	1.51
Ironworkers:		
Structural	$ 12.03	1.58
Laborers:		
Drillers	$ 10.00	2.50
Flaggers	$ 6.00	
Guardrail Installers	$ 7.92	
Landscape	$ 7.87	.16
Line Stripper	$ 8.69	.23
Pipelayers	$ 9.21	2.31
Rakers	$ 9.00	1.51
Sign Erectors	$ 10.00	
Unskilled	$ 8.66	1.38
Wheelman	$ 8.50	.43
Power equipment operators:		
Backhoes	$ 11.87	2.05
Bulldozers	$ 12.33	2.88
Cranes	$ 14.06	1.75
Excavators	$ 12.38	2.48
Graders	$ 13.06	3.73
Loaders	$ 11.41	2.87

```
     Mechanics..................$ 13.18            2.57

Truck drivers:
     Dump.......................$  9.35            3.10
     Tri axle...................$  8.70            1.18
     Two axle...................$  8.56            2.19
-----------------------------------------------------------------

WELDERS - Receive rate prescribed for craft performing
operation to which welding is incidental.
=================================================================

Unlisted classifications needed for work not included within
the scope of the classifications listed may be added after
award only as provided in the labor standards contract clauses
(29CFR 5.5 (a) (1) (ii)).

-----------------------------------------------------------------

In the listing above, the "SU" designation means that rates
listed under the identifier do not reflect collectively
bargained wage and fringe benefit rates.  Other designations
indicate unions whose rates have been determined to be
prevailing.

-----------------------------------------------------------------
```

WAGE DETERMINATION APPEALS PROCESS

1.) Has there been an initial decision in the matter? This can be:

* an existing published wage determination
* a survey underlying a wage determination
* a Wage and Hour Division letter setting forth a position on a wage determination matter
* a conformance (additional classification and rate) ruling

On survey related matters, initial contact, including requests for summaries of surveys, should be with the Wage and Hour Regional Office for the area in which the survey was conducted because those Regional Offices have responsibility for the Davis-Bacon survey program. If the response from this initial contact is not satisfactory, then the process described in 2.) and 3.) should be followed.

With regard to any other matter not yet ripe for the formal process described here, initial contact should be with the Branch of Construction Wage Determinations. Write to:

Branch of Construction Wage Determinations
Wage and Hour Division
U.S. Department of Labor
200 Constitution Avenue, N.W.
Washington, DC 20210

2.) If the answer to the question in 1.) is yes, then an interested party (those affected by the action) can request review and reconsideration from the Wage and Hour Administrator (See 29 CFR Part 1.8 and 29 CFR Part 7). Write to:

Wage and Hour Administrator
U.S. Department of Labor
200 Constitution Avenue, N.W.
Washington, DC 20210

The request should be accompanied by a full statement of the interested party's position and by any information (wage payment data, project description, area practice material, etc.) that the requestor considers relevant to the issue.

3.) If the decision of the Administrator is not favorable, an interested party may appeal directly to the Administrative Review Board (formerly the Wage Appeals Board). Write to:

Administrative Review Board
U.S. Department of Labor
200 Constitution Avenue, N.W.
Washington, DC 20210

4.) All decisions by the Administrative Review Board are final.

==========

END OF GENERAL DECISION

Town: **Kittery, Rte 1**
Project: **STP-1158(400)X Pin 11584.00**
Date: **April 14, 2008**

SPECIAL PROVISIONS
SECTION 104
Utilities

MEETING

A Preconstruction Utility Conference, as defined in Subsection 104.4.6 of the Standard Specifications **is** required.

GENERAL INFORMATION

These Special Provisions outline the arrangements that have been made by the Department for utility and/or railroad work to be undertaken in conjunction with this project. The following list identifies all known utilities or railroads having facilities presently located within the limits of this project or intending to install facilities during project construction.

Overview:

Utility/Railroad	Aerial	Underground	Railroad
Central Maine Power	X	X	
Comcast Cable	X	X	
Fairpoint New England	X	X	
Kittery Sewer District		X	
Kittery Water District		X	
Boston and Maine Railroad			X

Temporary utility adjustments are **not** anticipated. If temporary relocation becomes necessary, sufficient time will need to be allowed prior to the construction for all required temporary relocation.

All utility crossings over highways will provide not less than 18 feet vertical clearance over existing ground in cut or over finished grade in fill, during construction of this project.

The Contractor shall not excavate around any pole or guy anchor to a depth that compromises the stability of the pole.

Any times and dates mentioned are estimates only and are dependent upon favorable weather, working conditions, and freedom from emergencies. The Contractor shall have no claim against the Department if they are exceeded.

Utility working days are Monday through Friday, conditions permitting. Times are estimated on the basis of a single crew for each utility.

In all cases, the utilities shall be notified, by the Contractor, well in advance (three weeks) before work in any area is to commence.

All clearing and tree removal which is a part of this contract in areas where utilities are involved must be completed by the Contractor before the utilities can relocate their facilities. Any tree removal or tree trimming required within ten feet of the electrical conductors must be done by a qualified contractor. A list of tree removal contractors qualified to remove trees or limbs within ten feet of the electrical conductors may be obtained from the power company.

The **Contractor** must coordinate with the utilities any cuts, fills and provide accesses that are required for the completion of their work in this section. This work must be completed within 60 calendar days after the award. The pole list provided has spot cuts and fills but cross sections should be used to double check grades.

The **Utilities** will provide an initial layout (stakes/nails) of the pole locations based on the pole list that is in the project proposal/specification book. The **Contractor** is then responsible for maintaining and or replacing the pole location stakes/nails until the poles are set by the respective utilities. The **Contractor** shall re-establish these pole locations in a timely manner in order for the utility to complete its work as quickly as possible. Before re-staking the **Contractor** shall contact the utility to verify all locations before proceeding with the layout. The **Contractor** shall employ or retain competent Engineering and/or surveying personnel to fulfill these responsibilities. The **Contractor** must notify the **Department** of any errors or inconsistencies regarding the data and layout provided by the utilities.

Special note to Contractor and the Utilities: *The Contractor shall plan and schedule his work in such a manner that the utilities that are located on this project will not be harmed, damaged or impacted in any way. The Contractor and Utility will coordinate their work plans in an effort not to interfere with each other's progress or the completion of the project.*

RAILROAD

The **Boston & Maine Railroad** has an existing facility near the project but outside the scope of the project. The **Boston & Maine Railroad** will not require an agreement with the **Department** but will need notification 10 days in advance when working in the area of it right-of-way. Contractor must manage traffic in a way not to have cars stopped on the tracks. This management of traffic must be included into the Contractors **Traffic Control Plan**. If the scope of the project changes in anyway the **Boston & Maine Railroad** must be consulted. The contact for the **Boston & Maine Railroad** is George Thayer at 978-663-6973.

AERIAL

Fairpoint Communications are the owners of the poles on the project. There are 4 poles on the below list and these poles may or may not need to move based on the position of the guard rail and curb. Because these poles are not easy to move and they are behind guard rail the DOT Resident Engineer along with the utility representatives will field determine if the moves are needed. Fill will be needed before any pole can be reset. All poles should be checked for spot cut and fills using the cross-sections on the plan. All above ground utility locations (hydrants, poles, guys, etc.) will be reviewed for compliance with the Department's Above Ground Pole Policy following the completion of the paving operation. Any above ground utility locations not meeting the Department's Above Ground Pole Policy will require relocation to the proper offset.

The working days listed below are estimates given to the Department by the Utilities on the amount of time needed for them to complete their work. Any times and dates mentioned are estimates only and are dependent upon favorable weather, working conditions, and freedom from emergencies. The Contractor shall have no claim against the Department if they are exceeded.

Utility	Pole Set Days	Trans. Wires/ Cables	Remove Poles	Estimated Working Days
CMP		X		5
Comcast Cable		X		10
Fairpoint	X	X	X	30

Kittery Route 1

CMP Pole#	Existing Pole Station	Existing Pole Offset (ft)	Proposed Pole Station	Proposed Pole Offset (ft)
18	60+35	24 Right	Same	27
19	61+58	25 Right	Same	28
23	67+02	25 Right	Same	28
35	300+27	18 Left	Same	20

SUBSURFACE

Unless otherwise specified, any underground utility facilities shown on the project plans represent approximate locations gathered from available information. The Department cannot certify the level of accuracy of this data. Underground facilities indicated on the topographic sheets (plan views) have been collected from historical records and/or on-site designations provided by the respective utility companies. Underground facilities indicated on the cross-sections have been carried over from the plan view data and may also include further approximations of the elevations (depths) based upon straight-line interpolation from the nearest manholes, gate valves, or test pits.

The **Kittery Water District** has entered into an agreement with the Maine Department of Transportation to include installation of a new water main as shown on the plans and specs with bid items in Category 2 as part of this project. The Contractor shall install this water system as part of the bid document and shall include installation of the new water system in the schedule for construction. This additional water line work will be included in the items used to determine low bid and **is not** an option out clause. The contact for the **Kittery Water District** is Mike Rogers at 439-1128.

Kittery Sewer District has entered into an Agreement with the Maine Department of Transportation that the Contractor will adjust their sewer manholes as needed within this contract and within specifications for Items 812.162. **Kittery Sewer District** shall be notified as to when work this will take place so their contact person can work with the **Department's** on-site representative for inspection purposes. The contact for the **Kittery Sewer District** is Steve Tapley at 439-4646.

****Special note to contractor for adjustments of existing water gates and manholes only:***
The Agreement between Kittery Sewer District and the Maine Department of Transportation has an option out clause for the utilities existing adjustments. Should the bid prices be 20% over the estimated price the District shall accept or reject the Utility work from the Department's contract within 48 hours of receiving the bid prices from the Department. If the District elects to complete the Utility Work independently, the Department will remove the Utility Work items from the project contract. The Districts then agrees to accomplish Utility work independently and in such a manner as to not adversely affect the Project contractor's schedule. Times for the water gate adjustment by the District are listed below and will need to be respected in the Contractor's schedule.

Utility	Summary of Work	Estimated Working Days
Kittery Sewer District	Adjust Manholes to Grade	20

The **Kittery Sewer District** will inspect all existing manholes for damage prior to the start of the project. Any manholes damaged by the contractor will be repaired or replaced at the contractor's expense.

Fairpoint New England has a communication cable buried on the project. These cables are in the area of splicing cabinets and also service drops to homes or businesses. The contractor must protect the existing buried cable. The contact for Fairpoint New England is Joe Considine at (603)743-1118.

Central Maine Power has power cables that run underground from poles into private homes or businesses. These are in various locations along the project and the Contractor is encouraged to use caution when excavating in those areas. The contact for CMP is Gary Crabtree at 791-8025.

Comcast Cable Co also has private service drops from the poles to homes or businesses along the project. The Contractor is encouraged to use caution when excavating in those areas. The contact for Comcast is George Kirkwood at (603)679-5695.

UTILITY SIGNING

Any utility working within the construction limits of this project shall ensure that the traveling public is adequately protected at all times. All work areas shall be signed, lighted, and traffic flaggers employed as determined by field conditions. All traffic controls shall be in accordance with the latest edition of the Manual on Uniform Traffic Control Devices for Streets and Highways, as issued by the Federal Highway Administration.

SAFE PRACTICES AROUND UTILITY FACILITIES

The Contractor shall be responsible for complying with M.R.S.A. Title35-A, Chapter 7-A Sections 751 -761 Overhead High-Voltage Line Safety Act. Prior to commencing any work that may come within ten (10) feet of any aerial electrical line; the Contractor shall notify the aerial utilities as per section 757 of the above act.

DIG SAFE

The Contractor shall be responsible for determining the presence of underground utility facilities prior to commencing any excavation work and shall notify utilities of proposed excavation in accordance with M.R.S.A. Title 23 §3360-A, Maine "Dig Safe" System. The contractor is also reminded that all utilities on the project may not be members of Dig Safe.

MAINTAINING UTILITY LOCATION MARKINGS

The Contractor will be responsible for maintaining the buried utility location markings following the initial locating by the appropriate utility or their designated representative.

THE CONTRACTOR SHALL PLAN AND CONDUCT HIS WORK ACCORDINGLY.

Utility Contacts	Coordinator	Phone
Central Maine Power Co.	Gary Crabtree	791-8025
Comcast Cable	George Kirkwood	(603)679-5695
Verizon	Marty Pease	797-1170
Kittery Water District (main extension)	Mike Rogers	439-1128
Kittery Sewer District (adjustments)	Steve Tapley	439-4646
Fairpoint New England	Joe Considine	(603)743-1118
Boston & Maine Railroad	George Thayer	978-663-6973

SPECIAL PROVISION
SECTION 105
General Scope of Work
(Limitations of Operations)

The Contractor will be allowed to commence work and end work daily according to the Department of Marine Resources Sunrise/Sunset Table at the following Web address (http://www.maine.gov/dmr/sunrise_table.htm). Contractor will be allowed to enter roadway at Sunrise and must be off the roadway before Sunset. Any work outside these times will require nighttime lighting and safety attire.

SPECIAL PROVISION 105
CONSTRUCTION AREA

A Construction Area located in the **Town of Kittery** has been established by the Maine Department of Transportation (MDOT) in accordance with provisions of 29-A § 2382 Maine Revised Statutes Annotated (MRSA).

(a) The section of highway under construction beginning at Sta. 48+21 and ending at Sta. 92+50 of the construction centerline plus approaches.

(b) (Route 1) The section of highway under construction beginning at Sta. 48+21 and ending at Sta. 92+50 of the new construction centerline plus approaches.

Per 29-A § 2382 (7) MRSA, the MDOT may "*issue permits for stated periods of time for loads and equipment employed on public way construction projects, United States Government projects or construction of private ways, when within construction areas established by the Department of Transportation. The permit:*

A. Must be procured from the municipal officers for a construction area within that municipality;

B. May require the contractor to be responsible for damage to ways used in the construction areas and may provide for:

(1) Withholding by the agency contracting the work of final payment under contract; or

(2) The furnishing of a bond by the contractor to guarantee suitable repair or payment of damages.

The suitability of repairs or the amount of damage is to be determined by the Department of Transportation on state-maintained ways and bridges, otherwise by the municipal officers;

C. May be granted by the Department of Transportation or by the state engineer in charge of the construction contract; and

D. For construction areas, carries no fee and does not come within the scope of this section."

The Municipal Officers for the **Town of Kittery** agreed that an Overlimit Permit will be issued to the Contractor for the purpose of using loads and equipment on municipal ways in excess of the limits as specified in 29-A MRSA, on the municipal ways as described in the "Construction Area".

As noted above, a bond may be required by the municipality, the exact amount of said bond to be determined prior to use of any municipal way. The MDOT will assist in determining the bond amount if requested by the municipality.

The maximum speed limits for trucks on any town way will be 25 mph (40 km per hour) unless a higher legal limit is specifically agreed upon in writing by the Municipal Officers concerned.

DI

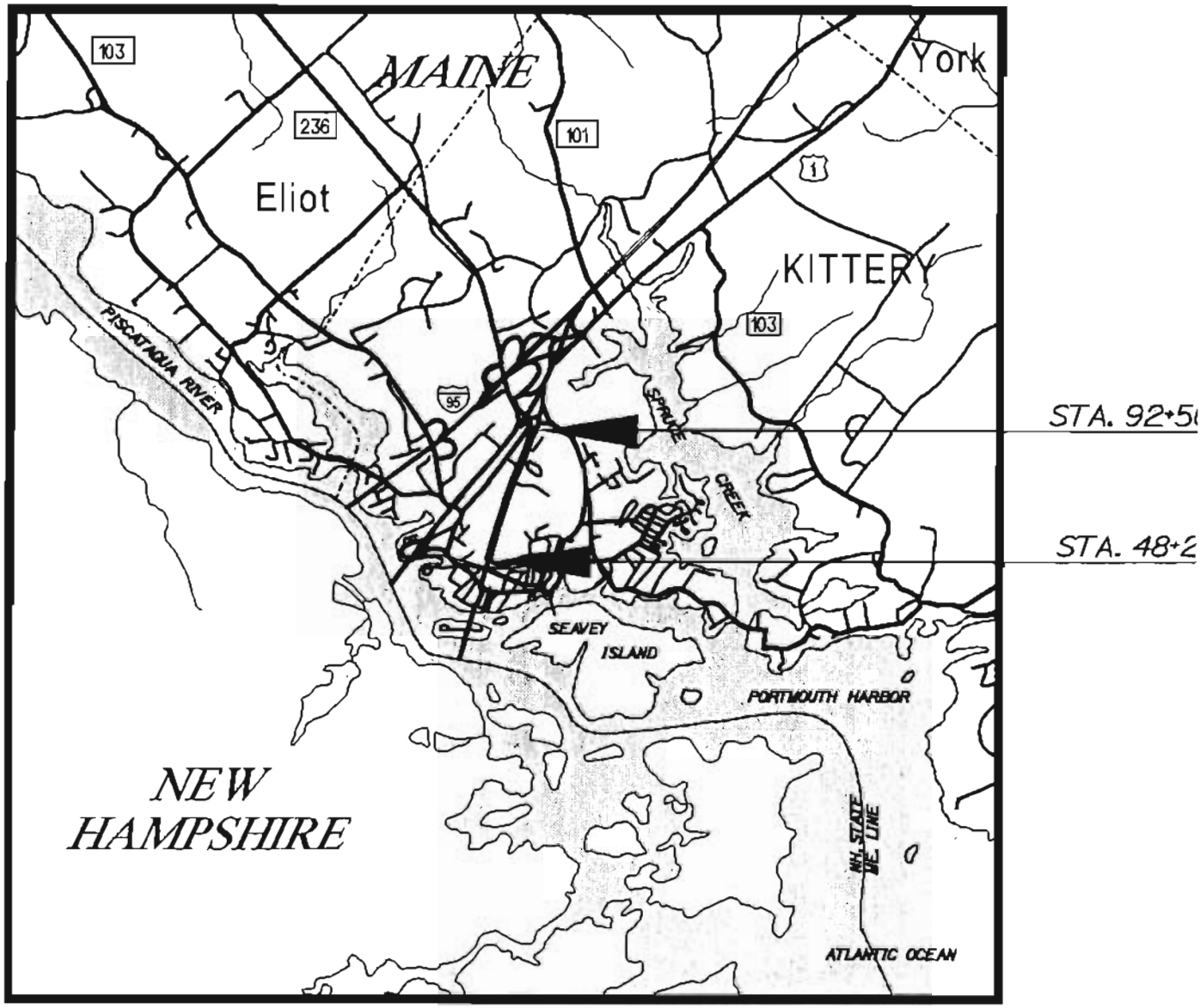

LOCATION MAP

1 0 1 2

SCALE IN MILES

KITTERY
WATER DISTRI

SPECIAL PROVISION 105
OVERLIMIT PERMITS

Title 29-A § 2382 MRSA Overlimit Movement Permits.

1. Overlimit movement permits issued by State. The Secretary of State, acting under guidelines and advice of the Commissioner of Transportation, may grant permits to move nondivisible objects having a length, width, height or weight greater than specified in this Title over a way or bridge maintained by the Department of Transportation

2. Permit fee. The Secretary of State, with the advice of the Commissioner of Transportation, may set the fee for single trip permits, at not less than $6, nor more than $30, based on weight, height, length and width. The Secretary of State may, by rule, implement fees that have been set by the Commissioner of Transportation for multiple trip, long-term overweight movement permits. Rules established pursuant to this section are routine technical rules pursuant to Title 5, chapter 375, subchapter II-A.

3. County and municipal permits. A county commissioner or municipal officer may grant a permit, for a reasonable fee, for travel over a way or bridge maintained by that county or municipality

4. Permits for weight. A vehicle granted a permit for excess weight must first be registered for the maximum gross vehicle weight allowed for that vehicle.

5. Special mobile equipment. The Secretary of State may grant a permit, for no more than one year, to move pneumatic-tire equipment under its own power, including Class A and Class B special mobile equipment, over ways and bridges maintained by the Department of Transportation. The fee for that permit is $15 for each 30-day period.

6. Scope of permit. A permit is limited to the particular vehicle or object to be moved, the trailer or semitrailer hauling the overlimit object and particular ways and bridges.

7. Construction permits. A permit for a stated period of time may be issued for loads and equipment employed on public way construction projects, United States Government projects or construction of private ways, when within construction areas established by the Department of Transportation. The permit:

A. Must be procured from the municipal officers for a construction area within that municipality;

B. May require the contractor to be responsible for damage to ways used in the construction areas and may provide for:

(1) Withholding by the agency contracting the work of final payment under contract; or

(2) The furnishing of a bond by the contractor to guarantee suitable repair or payment of damages.

The suitability of repairs or the amount of damage is to be determined by the Department of Transportation on state-maintained ways and bridges, otherwise by the municipal officers;

C. May be granted by the Department of Transportation or by the state engineer in charge of the construction contract; and

D. For construction areas, carries no fee and does not come within the scope of this section.

8. Gross vehicle weight permits. The following may grant permits to operate a vehicle having a gross vehicle weight exceeding the prescribed limit:

A. The Secretary of State, with the consent of the Department of Transportation, for state and state aid highways and bridges within city or compact village limits;

B. Municipal officers, for all other ways and bridges within that city and compact village limits; and

C. The county commissioners, for county roads and bridges located in unorganized territory.

9. Pilot vehicles. The following restrictions apply to pilot vehicles.

A. Pilot vehicles required by a permit must be equipped with warning lights and signs as required by the Secretary of State with the advice of the Department of Transportation.

B. Warning lights may be operated and lettering on the signs may be visible on a pilot vehicle only while it is escorting a vehicle with a permit on a public way.

With the advice of the Commissioner of Transportation and the Chief of the State Police, the Secretary of State shall establish rules for the operation of pilot vehicles.

9-A. Police escort. A person may not operate a single vehicle or a combination of vehicles of 125 feet or more in length or 16 feet or more in width on a public way unless the vehicle or combination of vehicles is accompanied by a police escort. The Secretary of State, with the advice of the Commissioner of Transportation, may require a police escort for vehicles of lesser dimensions.

A. The Bureau of State Police shall establish a fee for state police escorts to defray the costs of providing a police escort. A county sheriff or municipal police department may establish a fee to defray the costs of providing police escorts.

B. The Bureau of State Police shall provide a police escort if a request is made by a permittee. A county sheriff or municipal police department may refuse a permittee's request for a police escort.

C. A vehicle or combination of vehicles for which a police escort is required must be accompanied by a state police escort when operating on the interstate highway system.

10. Taxes paid. A permit for a mobile home may not be granted unless the applicant provides reasonable assurance that all property taxes, sewage disposal charges and drain and sewer assessments applicable to the mobile home, including those for the current tax year, have been paid or that the mobile home is exempt from those taxes. A municipality may waive the requirement that those taxes be paid before the issuance of a permit if the mobile home is to be moved from one location in the municipality to another location in the same municipality for purposes not related to the sale of the mobile home.

11. Violation. A person who moves an object over the public way in violation of this section commits a traffic infraction.

Section History:
PL 1993, Ch. 683, §A2 (NEW).
PL 1993, Ch. 683, §B5 (AFF).
PL 1997, Ch. 144, §1,2 (AMD).
PL 1999, Ch. 117, §2 (AMD).
PL 1999, Ch. 125, §1 (AMD).
PL 1999, Ch. 580, §13 (AMD).
PL 2001, Ch. 671, §30 (AMD).
PL 2003, Ch. 166, §13 (AMD).
PL 2003, Ch. 452, §Q73,74 (AMD).
PL 2003, Ch. 452, §X2 (AFF).

SPECIAL PROVISION
SECTION 107
TIME
(Limitation of Operations)
and
(Supplemental Liquidated Damages)

Where existing pavement carries traffic and is removed to install (or remove) drainage or utility structures, the pavement shall be replaced daily with a temporary pavement consisting of a minimum of 75 mm [3 inches] of acceptable hot or cold bituminous mixture. Cold bituminous mixture shall contain aggregates, asphalt cutbacks, liquefiers and wetting agents. No separate payment will be made for furnishing, placing, maintaining, and removing temporary pavement and all cost of such work will be considered incidental to the various drainage items.

Where existing pavement is excavated or covered by fill as a part of the general grading operations prior to November 1, 2008, the binder course of the hot mix asphalt pavement shall be installed and completed on or before November 1, 2008. Supplemental liquidated damages shall be assessed the Contractor in the amount of One Thousand Dollars ($1000.00) per day for each calendar day, beginning November 2, 2008 that above stated binder course remains incomplete. This assessment of supplemental liquidated damages shall be in addition to the liquidated damages per calendar day, as specified in Section 107 of the Standard Specifications.

Assessments of Supplemental Liquidated Damages shall cease on November 15, 2008.

Grading operations which excavate or fill over existing pavement being used to carry traffic shall be suspended on November 1, 2008 and not be resumed until the Spring of 2009.

SPECIAL PROVISION
SECTION 107
TIME
(Scheduling of Work – Projected Payment Schedule)

Description The Contractor shall also provide the Department with a Quarterly Projected Payment Schedule that estimates the value of the Work as scheduled, including requests for payment of Delivered Materials. The Projected Payment Schedule must be in accordance with the Contractor's Schedule of Work and prices submitted by the Contractor's Bid. The Contractor shall submit the Projected Payment Schedule as a condition of Award.

SPECIAL PROVISION
SECTION 107
SCHEDULING OF WORK

Replace Section 107.4.2 with the following:

"107.4.2 Schedule of Work Required Within 21 Days of Contract Execution and before beginning any on-site activities, the Contractor shall provide the Department with its Schedule of Work. The Contractor shall plan the Work, including the activity of Subcontractors, vendors, and suppliers, such that all Work will be performed in Substantial Conformity with its Schedule of Work. The Schedule must include sufficient time for the Department to perform its functions as indicated in this Contract, including QA inspection and testing, approval of the Contractor's TCP, SEWPCP and QCP, and review of Working Drawings.

At a minimum, the Schedule of Work shall include a bar chart which shows the major Work activities, milestones, durations, and a timeline. Milestones to be included in the schedule include: (A) start of Work, (B) beginning and ending of planned Work suspensions, (C) Completion of Physical Work, and (D) Completion. If the Contractor Plans to Complete the Work before the specified Completion date, the Schedule shall so indicate.

Any restrictions that affect the Schedule of Work such as paving restrictions or In-Stream Work windows must be charted with the related activities to demonstrate that the Schedule of Work complies with the Contract.

The Department will review the Schedule of Work and provide comments to the Contractor within 20 days of receipt of the schedule. The Contractor will make the requested changes to the schedule and issue the finalized version to the Department."

SPECIAL PROVISION
SECTION 107
TIME
(Contract Time)

1. The Contractor will be allowed to commence work at any time after the Soil Erosion Water Pollution Control Plan, Traffic Control Plan and all other required submittals have been approved and the field office has been approved.

2. The specified Completion date is June 19, 2009.

3. For every weekday not worked after operations begin, the Contractor will be charged liquidated damages per calendar day (excluding inclement weather days) at the rate stated in 107.7.2

4. The Contractor will cease all operations on July 3rd, 2008 by 12:00 pm and will not be allowed to commence work until July 7th, 2008 at 6:00 am.

5. The Contractor will cease all operations on August 29th, 2008 by 12:00 pm and will not be allowed to commence work until September 2nd, 2008 at 6:00 am.

6. The Contractor will cease all operations on May 29th, 2009 by 12:00 pm and will not be allowed to commence work until Tuesday June 4th, 2009 at 6:00 am.

SPECIAL PROVISION
SECTION 203 – EXCAVATION AND EMBANKMENT
(CONTROLLED BLASTING)

Section 203 is amended to include the following:
203.011 Controlled Blasting

Controlled Blasting is defined as a blasting method which utilizes a line of closely spaced, lightly loaded blastholes that are fired either before or after the main production blast to define a break line on the perimeter of the excavation.

The purpose of the Controlled Blasting is to create a stable rock face with a fall zone to protect the traveling public from rockfall hazard and to protect existing structures, adjacent and nearby properties, and the public from damage or injury.

1. All blasting operations including the storage and handling of explosives and blasting agents shall be performed in accordance with the applicable provisions of the standard Specifications and all other pertinent Federal, State and local regulations.
2. The Contractor shall observe the entire blast area to guard against potential hazards before commencing work in the cut. The Contractor shall not be allowed to store explosives on the project site or on State owned property unless prior approval is granted by the Department.
3. In case of conflict between regulations or between regulations and this Specification, the Contractor shall comply with the strictest applicable codes, regulations, or Specifications.
4. General Requirements
    a. The Resident will, at all times, have the authority to prohibit or halt the Contractor's blasting operations if it is apparent that through the methods being employed, the required slopes are not being obtained in a stable condition, or the safety and convenience of the public is being jeopardized.
    b. Explosives shall be stored, handled and employed in accordance with Federal, State and Local regulations. No explosives, caps, detonators or fuses shall be stored on the project site during non-working hours.
    c. The overburden shall be removed or trenches shall be excavated through the overburden at the intervals directed by the Resident, normally 25 ft but in no case closer than 10 ft apart to permit cross sectioning of the rock in its original position. Rock removed prior to sectioning will be considered as Common Excavation.
5. Pre-Blast Surveys:
    a. Prior to start of earth/rock excavation or blasting work performed under this Special Provision, the Contractor will engage a qualified independent firm, qualified by training and experience to conduct a pre-blast condition survey all structures within 1,000 ft. of blasting areas.

The Contractor shall give notice in writing, to the Owners of the properties concerned. Advise in notice the dates on which surveys are to be made so that they may have representatives present during the examination. Provide copies of all notices to the Department.

The survey shall consist of a description of the interior and exterior conditions of the various structures examined. Descriptions shall locate any cracks, damage, or other defects existing and shall include such information so as to make it possible to determine the effect, if any, of the construction operations on the defect. Where significant crack or damage, exist, or for defects too complicated to describe in words, photographs shall be taken and made part of the record.

The Contractor's record of the pre-blast condition survey shall consist of written documentation and photographs of the conditions identified, or a good quality videotape survey with appropriate audio description of conditions and defects. Prior to start of work, one copy of the Contractor's record of condition survey for each property/structure shall be submitted to the Department for review and retention.

Upon completion of all earth/rock excavation and blasting work, the Contractor shall make an examination similar to the pre-construction survey of any properties, structures, and conditions were complaints of damage have been received or damage claims have been filed and give notice to all interested parties so that they may be present during the final examination. Records of the final examination shall be distributed the same as the original pre-construction survey.

b. The Contractor may, at no additional cost to the Department, conduct additional pre-blast surveys of structures in the area.
c. The Department will make a similar examination of any properties, structures, and conditions where damage claims have been filed. Records of the damage claim examination will be made available to the Contractor.

6. SUBMITTALS
   a. Advance submittal – Not less than two weeks prior to commencing drilling and blasting operations, or at any time the Contractor proposes to changes drilling and blasting methods, the Contractor shall submit a Blasting Plan to the Resident for review. The Blasting Plan shall contain full details of the drilling and blasting patterns and controls the Contractor proposes to use for both the controlled and production blasting. Review of the Blasting Plan by the Department shall not relieve the Contractor of his responsibility for the safety, accuracy and adequacy of the Plan when implemented in the field. The Blasting Plan shall contain the following information.
      i. Station limits of proposed shots.
      ii. Plan and section views of the proposed drill pattern, including free face, burden, blasthole spacing, blasthole diameters, blasthole angles, lift height, and subdrill depth.

iii. Loading diagram showing type and amount of explosives, primers, initiators, and location and depth of stemming.
iv. Initiators sequence of blastholes including delay times and delay system.
v. Manufacturers' data sheets for all explosives, primers and initiators to be used.
    1. The delay elements in blasting caps are known to deteriorate with age. For this reason, it is required that all blasting caps used on the project be less than one year of age. No blasting product will be brought to the job site if the date codes are missing.
    2. When in the opinion of the Resident any blasting product is either of excessive age or in what appears to be a deteriorated condition, all work will cease until the product's age or quality can be determined.
    3. Explosives containing Perchlorate compounds shall not be used on MaineDOT projects.
vi. Details of the audible advance signal system to be employed at the job site.

b. Daily Blasting Logs – The Contractor shall provide the Resident with a daily log of blasting operations, submitted on a weekly basis. The log shall be updated at the close of each working day. The log shall include the number of blasts, times, and dates of blasts, the blasting locations and patterns, and all information shown below:
    i. Station limits of the shot.
    ii. Plan and section views of drill pattern, including free face, burden blasthole spacing, blasthole diameters, lift height, and subdrill depth.
    iii. Loading diagram showing type and amount of explosive, primers, initiators, and location and depth of stemming.
    iv. Initiators sequence of blastholes including delay times and delay system in each blasthole.
    v. Mats or other protection used.
    vi. Signature of the Blaster in charge.

c. The Contractor shall report to the Resident in writing all blasting complaints received by the Contractor within 24 hours of receipt. Each blast complaint report shall include the name and address of the complainant, time received, date and time of blast complained about, and a description of the circumstances which led to the complaint.

7. BLAST VIBRATION CONTROL AND MONITORING
    a. The Contractor shall be required to monitor blasting vibrations (both ground and air concussions) and shall provide a Pre-Blast Condition survey of all structures that may be affected.
    b. When nearby structures, utilities, or adjacent slopes may be subject to damage from blast-induced ground vibrations, the ground vibrations shall be controlled by the use of properly designed delay sequences and appropriate charge weights per delay.
    c. When vibration damage to adjacent structures is possible, the Contractor shall monitor each blast with an approved seismograph located, as approved, between the blast area and the closest structure subject to blast damage. The seismograph used shall be capable of recording particle velocity for three mutually perpendicular components of vibration in the range generally found with controlled blasting.

8. FLYROCK CONTROL Before the firing of any blast in areas where flying rock or debris may result in personal injury or damage to property, the rock to be blasted shall be covered with approved blasting mats, soil, or other equally serviceable material to prevent flyrock. The method of flyrock control shall be subject to approval by the Resident.

9. CONTROLLED BLASTING METHODS
   a. Production blasting refers to the main fragmentation blasting resulting from widely spaced production holes drilled throughout the main excavation area adjacent to the presplit line. Production holes shall be detonated in a controlled delay sequence.
   b. Presplitting is defined as the establishment of a free surface of a shear plane in rock by the controlled usage of explosives and blasting accessories in appropriately aligned and spaced drill holes so that the resulting split rock is not affected by subsequent blasting and excavation operations. The purpose of presplitting is to minimize damage to the rock backslope and to help ensure long term stability. When presplitting, the detonation of the presplit line shall be before the detonation of any production holes.
      i. Prior to drilling, all overburden and all loose and disintegrated rock shall be removed down to solid rock in the vicinity of the presplit lines. Potentially dangerous boulders beyond the excavation limits shall also be removed as directed by the Resident.
      ii. Presplitting shall extend a minimum of 30 feet ahead of the limits of production blasting within the section or to the end of the cut as applicable.
      iii. All drilling equipment used to drill the presplit holes shall have electromechanical or electronic devices affixed to that equipment to accurately determine the angle at which the drill steel enters the rock. Presplit hole drilling will not be permitted if these devices are missing or inoperative.
      iv. The length of the presplit holes shall not exceed 30 feet in depth unless approved by the Resident. Rock deeper than 30 feet shall usually be presplit in lifts, but no lift shall be less than 10 feet in depth. When the cut height will require more than one lift, a maximum 2-foot offset between lifts shall be permitted to allow for equipment clearance. No payment will be made for additional excavated quantity caused by offsetting of presplit lines for less than 20 foot lifts. Drilling 2 feet below ditch bottom will be allowed to facilitate removal of the toe berm.
      v. Before placing charges, the contractor shall determine that the hole is free of obstructions for its entire depth. All necessary precautions shall be exercised so that placing the charges will not cause caving of material from the walls of the holes.
      vi. The diameter of the explosives used in presplit holes shall not be greater than ½ the diameter of the hole.
      vii. Continuous column cartridge explosives manufactured especially for presplitting shall be used for all presplitting. The bottom charge of a presplit hole may be larger than the line charges, but shall not be large enough to cause overbreak. The top charge of the presplitting hole shall be placed far enough below the collar, and reduced sufficiently, to avoid overbreaking and heaving. The upper portion of all presplit holes, from the top charge to the hole collar, shall be stemmed.

viii. The presplit slope face shall not deviate more than one foot from a plane passing though adjacent drillholes, except where the character of the rock is such that, as determined by the Resident, irregularities are unavoidable. The one-foot plane shall be measured perpendicular to the plane of the slope. In no case shall any portion of the slope encroach on the roadbed.

c. Cushion blasting. Where the horizontal distance from the existing rock face to the cut face is less than 15 feet, or if rock conditions warrant this approach, the contractor may use cushion blast in lieu of presplitting. Cushion blasting is similar to presplitting except that the detonation along the cut face occurs after the detonation of all production holes. With the exception of the above criteria, requirements previously given for presplitting shall also apply to cushion blasting.

d. Sliver Cuts – For sliver cuts, pioneering the top of cuts and preparing a working platform to begin the controlled blasting may require unusual work methods and use of equipment. The contractor may use angle drilled holes during the initial pioneering operations to obtain the desired rock face. Hole spacing shall not exceed 30 inches.

10. Method of Measurement. Controlled Blasting shall be paid by the linear foot of presplitting holes and extra drilled holes without explosives, measured from the top of the drill hole at the rock surface to the bottom of the hole or to the elevation of the required subgrade (whichever is higher) or to an established bench elevation. Portions of holes not meeting the requirements of Subsection 8 will not be measured. Production holes will not be measured. Presplitting holes and extra drilled holes without explosives drilled where presplitting is not required by this specification will not be measured. Where presplitting is required, excavated rock will be paid only to the slope and depth lines shown on the plans or as ordered by the Resident. Where the Resident determines that the removal of additional rock is necessary due to conditions clearly not attributable to the Contractor's methods of operations, the payment lines will be adjusted to the limits ordered, to include only rock actually removed within such limits.

11. Basis of Payment. The accepted quantity of excavated rock will be paid for at the contract unit price per cubic yard under Pay Item 203.21 – Rock Excavation. The accepted quantity of presplitting rock will be paid for at the contract unit price per linear foot under Pay Item 203.211 – Preplitting Rock. All costs incurred by the Contractor in conducting pre-blast surveys, preparing an approved blasting plan, in maintaining a blasting log, and in adopting revised blasting methods necessary to produce an acceptable test shot shall be considered incidental to the contract unit prices for rock excavation and presplitting rock.

Add Pay Item		Unit
203.211	Presplitting Rock	Linear Foot

SPECIAL PROVISION
SECTION 203
EXCAVATION AND BORROW

(Excavation that may be infested with invasive garlic mustard plant parts and/or seed)

The invasive plant garlic mustard *(Alliaria petiolata)* is known to exist within the project limits. All efforts feasible shall be taken to avoid moving plants, plant parts, or seed of garlic mustard beyond the Town of Kittery. The purpose of this special provision is prevention of the artificial spread of this invasive plant beyond project limits. Garlic mustard is known to exist from station 50 + 00 to 52 + 00; from station 60 + 00 to 63 + 50; and at station 73 + 50. Areas where garlic mustard exists will be flagged. Excavation in these areas will be hauled to a location in the Town of Kittery as directed by the resident engineer for proper disposal and shall be paid for under common excavation.

Description: All excavation from existing grade to a depth of 6 inches in areas identified as being infested with the invasive plant garlic mustard shall be hauled to a location in the Town of Kittery as directed by the resident engineer.

SPECIAL PROVISION
SECTION 304
AGGREGATE BASE AND SUBBASE COURSE
(Aggregate Subbase)

If the Contractor wishes to route public traffic over the completed aggregate subbase course, the course shall be constructed with a minimum 50 mm [2 in] surcharge above the design grade, except as described below. Whenever the surcharge is used, it shall be constructed with material meeting the requirements of Section 703.06(b), Type D Aggregate. Also, whenever, the surcharge is used, it shall be placed on all the aggregate subbase course subjected to public driveways, sidewalks, approach roads, or the outer portions of the shoulders. Removal of the surcharge shall be followed immediately in succession by the fine grading of the aggregate subbase and construction of the next course.

The furnishing, placing, maintaining, and removal of the surcharge will not be paid for directly, but will be considered incidental to the Aggregate Subbase Course pay item.

If salvaged bituminous pavement is placed as the top layer of the aggregate subbase course, a surcharge is not required.

SPECIAL PROVISION
DIVISION 400
PAVEMENTS

SECTION 401 - HOT MIX ASPHALT PAVEMENT

401.01 Description The Contractor shall furnish and place one or more courses of Hot Mix Asphalt Pavement (HMA) on an approved base in accordance with the contract documents and in reasonably close conformity with the lines, grades, thickness, and typical cross sections shown on the plans or established by the Resident. The Department will accept this work under Quality Assurance provisions, in accordance with these specifications and the requirements of Section 106 – Quality, the provisions of AASHTO M 323 except where otherwise noted in sections 401 and 703 of these specifications, and the Maine DOT Policies and Procedures for HMA Sampling and Testing.

401.02 Materials Materials shall meet the requirements specified in Section 700 - Materials:

Asphalt Cement	702.01
Aggregates for HMA Pavement	703.07
HMA Mixture Composition	703.09

401.021 Recycled Asphalt Materials Recycled Asphalt Pavement (RAP) may be introduced into the mixture at percentages approved by the Department. If approved by the Department, the Contractor shall provide documentation stating the source, average residual asphalt content, and stockpile gradations showing RAP materials have been sized to meet the maximum aggregate size requirements of each mix designation. The Department will obtain samples for verification and approval prior to its use.

In the event that RAP source or properties change, the Contractor shall notify the Department of the change and submit new documentation stating the new source or properties a minimum of 72 hours prior to the change to allow for obtaining new samples and approval.

401.03 Composition of Mixtures The Contractor shall compose the Hot Mix Asphalt Pavement with aggregate, Performance Graded Asphalt Binder (PGAB), and mineral filler if required. HMA shall be designed and tested according to AASHTO T312 and the volumetric criteria in Table 1. The Contractor shall size, uniformly grade, and combine the aggregate fractions in proportions that provide a mixture meeting the grading requirements of the Job Mix Formula (JMF). The Contractor may use a maximum of 15% reclaimed asphalt pavement (RAP) in any base, binder, surface, or shim course. The Contractor may be allowed to use more than 15% RAP, up to a maximum of 25% RAP, in a base, binder, or shim course provided that PG 58-34 asphalt binder is used in the mixture.

The Contractor shall submit for Department approval a JMF to the Central Laboratory in Bangor for each mixture to be supplied. The Department may approve 1 active design per nominal maximum size, per traffic level, per plant, plus a 9.5mm “fine” mix @ 50 gyrations for shimming and where required, a non-RAP design for bridge decks. The Department shall then have 15 calendar days in which to process a new design before approval. The JMF shall establish a single percentage of aggregate passing each sieve size within the limits shown in section 703.09. The mixture shall be designed and produced, including all production tolerances, to comply with the allowable control points for the particular type of mixture as outlined in 703.09. The JMF shall state the original source, gradation, and percentage to be used of each portion of the aggregate and mineral filler if required. It shall also state the proposed PGAB content, the name and
location of the refiner, the supplier, the source of PGAB submitted for approval, the type of PGAB modification if applicable, and the location of the terminal if applicable.

In addition, the Contractor shall provide the following information with the proposed JMF:

Properly completed JMF indicating all mix properties (Gmm, VMA, VFB, etc.)
Stockpile Gradation Summary
Design Aggregate Structure Consensus Property Summary
Design Aggregate Structure Trial Blend Gradation Plots (0.45 power chart)
Trial Blend Test Results for at least three different asphalt contents
Specific Gravity and temperature/viscosity charts for the PGAB to be used
Recommended mixing and compaction temperatures from the PGAB supplier
Material Safety Data Sheets (MSDS) For PGAB
Asphalt Content vs. Air Voids trial blend curve
Test report for Contractor's Verification sample

At the time of JMF submittal, the Contractor shall identify and make available the stockpiles of all proposed aggregates at the plant site. There must be a minimum of 135 Mg [150 ton] for stone stockpiles, 70 Mg [75 ton] for sand stockpiles, and 45 Mg [50 ton] of blend sand before the Department will sample. The Department shall obtain samples for laboratory testing. The Contractor shall also make available to the Department the PGAB proposed for use in the mix in sufficient quantity to test the properties of the asphalt and to produce samples for testing of the mixture. Before the start of paving, the Contractor and the Department shall split a production sample for evaluation. The Contractor shall test its split of the sample and determine if the results meet the requirements of the Department's written policy for mix design verification (See Maine DOT Policies and Procedures for HMA Sampling and Testing available at the Central Laboratory in Bangor). If the results are found to be acceptable, the Contractor will forward their results to the Department's Lab, which will test the Department's split of the sample. The results of the two split samples will be compared and shared between the Department and the Contractor. If the Department finds the mixture acceptable, an approved JMF will be forwarded to the Contractor and paving may commence. The first day's production shall be monitored, and the approval may be withdrawn if the mixture exhibits undesirable characteristics such as checking, shoving or displacement. The Contractor shall be allowed to submit aim changes within 24 hours of receipt of the first Acceptance test result. Adjustments will be allowed of up to 2% on the percent passing the 2.36 mm sieve through the 0.075 mm and 3% on the percent passing the 4.75 mm or larger sieves. Adjustments will be allowed on the %PGAB of up to 0.2%. Adjustments will be allowed on GMM of up to 0.010.

The Contractor shall submit a new JMF for approval each time a change in material source or materials properties is proposed. The same approval process shall be followed. The cold feed percentage of any aggregate may be adjusted up to 10 percentage points from the amount listed on the JMF, however no aggregate listed on the JMF shall be eliminated. The cold feed percentage for RAP may be adjusted up to 5 percentage points from the amount listed on the JMF but shall not exceed the maximum allowable percentage for RAP for the specific application.

TABLE 1: VOLUMETRIC DESIGN CRITERIA

Design ESAL's (Millions)	Required Density (Percent of G_{mm})			Voids in the Mineral Aggregate (VMA)(Minimum Percent)					Voids Filled with Binder (VFB) (Minimum %)	Fines/Eff. Binder Ratio
				Nominal Maximum Aggregate Size (mm)						
	$N_{initial}$	N_{design}	N_{max}	25	19	12.5	9.5	4.75		
<0.3	≤91.5	96.0	≤98.0	13.0	14.0	15.0	16.0	16.0	70-80	0.6-1.2
0.3 to <3	≤90.5								65-80	
3 to <10	≤89.0								65-80*	
10 to <30										
≥ 30										

*For 9.5 mm nominal maximum aggregate size mixtures, the maximum VFB is 82.
*For 4.75 mm nominal maximum aggregate size mixtures, the maximum VFB is 84.

401.04 Temperature Requirements After the JMF is established, the temperatures of the mixture shall conform to the following tolerances:

In the truck at the mixing plant – allowable range 135° to 163°C [275 to 325°F]
At the Paver – allowable range 135° to 163°C [275 to 325°F]

The JMF and the mix subsequently produced shall meet the requirements of Tables 1 and Section 703.07.

401.05 Performance Graded Asphalt Binder Unless otherwise noted in Special Provision 403 - Hot Bituminous Pavement, PGAB shall be 64-28, except that for mixtures containing greater than 15% but no more than 25% RAP the PGAB shall be PG 58-34. The PGAB shall meet the applicable requirements of AASHTO M320 - Standard Specification for PGAB. The Contractor shall provide the Department with an approved copy of the Quality Control Plan for PGAB in accordance with AASHTO R 26 Certifying Suppliers of PGAB.

401.06 Weather and Seasonal Limitations The State is divided into two paving zones as follows:

a. Zone 1 Areas north of US Route 2 from Gilead to Bangor and north of Route 9 from Bangor to Calais.
b. Zone 2 Areas south of Zone 1 including the US Route 2 and Route 9 boundaries.

The Contractor may place Hot Mix Asphalt Pavement for use other than a traveled way wearing course in either Zone between the dates of April 15th and November 15th, provided that the air temperature as determined by an approved thermometer (placed in the shade at the paving location) is 4°C [40°F] or higher and the area to be paved is not frozen. The Contractor may place Hot Mix Asphalt Pavement as traveled way wearing course in Zone 1 between the dates of May 1st and the Saturday following October 1st and in Zone 2 between the dates of April 15th and the Saturday following October 15th, provided the air temperature determined as above is 10°C [50°F] or higher. For the purposes of this Section, the traveled way includes truck lanes, ramps, approach roads and auxiliary lanes. The atmospheric temperature for all courses on bridge decks shall be 10°C [50°F] or higher.

Hot Mix Asphalt Pavement used for curb, driveways, sidewalks, islands, or other incidentals is not subject to seasonal limitations, except that conditions shall be satisfactory for proper handling and finishing of the mixture. Unless otherwise specified, the Contractor shall not place Hot Mix Asphalt Pavement on a wet or frozen surface and the air temperature shall be 4°C [40°F] or higher.

On all sections of overlay with wearing courses less than 25 mm [1 in] thick, the wearing course for the travelway and adjacent shoulders shall be placed between the dates of May 15th and the Saturday following September 15th.

On all sections of overlay with wearing courses less than 1 inch thick, the wearing course for the travelway and adjacent shoulders shall be placed between the dates of June 1st and the Saturday following September 1st if the work is to be performed, either by contract requirement, or Contractor option, during conditions defined as "night work".

401.07 Hot Mix Asphalt Plant

401.071 General Requirements HMA plants shall conform to AASHTO M156.

a. Truck Scales When the hot mix asphalt is to be weighed on scales meeting the requirements of Section 108 - Payment, the scales shall be inspected and sealed by the State Sealer as often as the Department deems necessary to verify their accuracy.

Plant scales shall be checked prior to the start of the paving season, and each time a plant is moved to a new location. Subsequent checks will be made as determined by the Resident. The Contractor will have at least ten 20 Kg [50 pound] masses for scale testing.

401.072 Automation of Batching Batch plants shall be automated for weighing, recycling, and monitoring the system. In the case of a malfunction of the printing system, the requirements of Section 401.074 c. of this specification will apply.

The batch plant shall accurately proportion the various materials in the proper order by weight. The entire batching and mixing cycle shall be continuous and shall not require any manual operations. The batch plant shall use auxiliary interlock circuits to trigger an audible alarm whenever an error exceeding the acceptable tolerance occurs. Along with the alarm, the printer shall print an asterisk on the delivery slip in the same row containing the out-of-tolerance weight. The automatic proportioning system shall be capable of consistently delivering material within the full range of batch sizes. When RAP is being used, the plant must be capable of automatically compensating for the moisture content of the RAP.

All plants shall be equipped with an approved digital recording device. The delivery slip load ticket shall contain information required under Section 108.1.3 - Provisions Relating to Certain Measurements, Mass and paragraphs a, b, and c of Section 401.073

401.073 Automatic Ticket Printer System on Automatic HMA Plant An approved automatic ticket printer system shall be used with all approved automatic HMA plants. The requirements for delivery slips for payment of materials measured by weight, as given in the following Sections, shall be waived: 108.1.3 a., 108.1.3 b., 108.1.3 c., and 108.1.3 d. The automatic printed ticket will be considered as the Weight Certificate.

The requirements of Section 108.1.3 f. - Delivery Slips, shall be met by the weigh slip or ticket, printed by the automatic system, which accompanies each truckload, except for the following changes:

a. The quantity information required shall be individual weights of each batch or total net weight of each truckload.
b. Signatures (legible initials acceptable) of Weighmaster (required only in the event of a malfunction as described in 401.074 c.).
c. The MDOT designation for the JMF.

401.074 Weight Checks on Automatic HMA Plant At least twice during each 5 days of production either of the following checks will be performed:

a. A loaded truck may be intercepted and weighed on a platform scale that has been sealed by the State Sealer of Weights and Measures within the past 12 months. Whenever the discrepancy in net weights is greater than 1.0%, but does not exceed 1.5%, the plant inspector will notify the producer to take corrective action; payment will still be governed by the printed ticket. The producer will be allowed a period of two days to make any needed repairs to the plant and/or platform scales so that the discrepancy in net weights between the two is less than 1.0%. If the discrepancy exceeds 1.5%, the plant will be allowed to operate as long as payment is determined by truck platform scale net weight. Effective corrective action shall be taken within two working days.

b. Where platform scales are not readily available, a check will be made to verify the accuracy and sensitivity of each scale within the normal weighing range and to assure that the interlocking devices and automatic printer system are functioning properly.

c. In the event of a malfunction of the automatic printer system, production may be continued without the use of platform truck scales for a period not to exceed the next two working days, providing total weights of each batch are recorded on weight tickets and certified by a Licensed Public Weighmaster.

401.08 Hauling Equipment Trucks for hauling Hot Mix Asphalt Pavement shall have tight, clean, and smooth metal dump bodies, which have been thinly coated with a small amount of approved release agent to prevent the mixture from adhering to the bodies.

All truck dump bodies shall have a cover of canvas or other water repellent material capable of heat retention, which completely covers the mixture. The cover shall be securely fastened on the truck, unless unloading.

All truck bodies shall have an opening on both sides, which will accommodate a thermometer stem. The opening shall be located near the midpoint of the body, at least 300 mm [12 in] above the bed.

401.09 Pavers Pavers shall be self-contained, self-propelled units with an activated screed (heated if necessary) capable of placing courses of Hot Mix Asphalt Pavement in full lane widths on the main line, shoulder or similar construction.

On projects with no price adjustment for smoothness, pavers shall be of sufficient class and size to place Hot Mix Asphalt Pavement over the full width of the mainline travel way with a 3 m [10 ft] minimum main screed with activated extensions.

The Contractor shall place Hot Mix Asphalt Pavement on the main line with a paver using an automatic grade and slope controlled screed, unless otherwise authorized by the Department. The controls shall automatically adjust the screed and increase or decrease the layer thickness to compensate for irregularities in the preceding course. The controls shall maintain the proper transverse slope and be readily adjustable so that transitions and superelevated curves can be properly paved. The controls shall operate from a fixed or moving reference such as a grade wire or ski type device (floating beam) with a minimum length of 10 m [30 ft], a non-contact grade control with a minimum span of 7.3 m [24 ft], except that a 12 m [40 ft] reference shall be used on Expressway projects.

The Contractor shall operate the paver in such a manner as to produce a visually uniform surface texture and a thickness within the requirements of Section 401.101 - Surface Tolerances. The paver shall have a receiving hopper with sufficient capacity for a uniform spreading operation and a distribution system to place the mixture uniformly, without segregation in front of the screed. The screed assembly shall produce a finished surface of the required evenness and texture without tearing, shoving, or gouging the mixture. Pavers with extendible screeds shall have auger extensions and tunnel extenders as per the manufacturer's recommendations, a copy of which shall be available if requested.

The Contractor shall have the paver at the project site sufficiently before the start of paving operations to be inspected and approved by the Department. The Contractor shall repair or replace any paver found worn or defective, either before or during placement, to the satisfaction of the Department. Pavers that produce an unevenly textured or non-uniform mat will be repaired or replaced before continuing to place HMA on MDOT projects. On a daily basis, the Contractor shall perform nuclear density testing across the mat being placed, at 300 mm [12 in] intervals. If the values vary by more than 2.0% from the mean, the Contractor shall make adjustments until the inconsistencies are remedied.

Failure to replace or repair defective placement equipment may result in a letter of suspension of work and notification of a quality control violation resulting in possible monetary penalties as governed by Section 106 - Quality

401.10 Rollers Rollers shall be static steel, pneumatic tire, or approved vibrator type. Rollers shall be in good mechanical condition, capable of starting and stopping smoothly, and be free from backlash when reversing direction. Rollers shall be equipped and operated in such a way as to prevent the picking up of hot mixed material by the roller surface. The use of rollers, which result in crushing of the aggregate or in displacement of the HMA will not be permitted. Any Hot Mix Asphalt Pavement that becomes loose, broken, contaminated, shows an excess or deficiency of Performance Graded Asphalt Binder, or is in any other way defective shall be removed and replaced at no additional cost with fresh Hot Mix Asphalt Pavement, which shall be immediately compacted to conform to the adjacent area.

The type of rollers to be used and their relative position in the compaction sequence shall generally be the Contractor's option, provided specification densities are attained and with the following requirements:

a. On variable-depth courses, the first lift of pavement over gravel, reclaimed pavement, an irregular surface, or on bridges, at least one roller shall be 14.5 Mg [16 ton] pneumatic-tired. Unless otherwise allowed by the Resident, pneumatic-tired rollers shall be equipped with skirting to minimize the pickup of HMA materials from the paved surface. When required by the Resident, the roller shall be ballasted to 18.1 Mg [20 ton].

b. Compaction with a vibratory or steel wheel roller shall precede pneumatic-tired rolling, unless otherwise authorized by the Department.

c. Vibratory rollers shall not be operated in the vibratory mode when checking or cracking of the mat occurs, or on bridge decks.

d. Any method, which results in cracking or checking of the mat, will be discontinued and corrective action taken.

The maximum operating speed for a steel wheel or pneumatic roller shall not exceed the manufacturer's recommendations, a copy of which shall be available if requested.

401.101 Surface Tolerances The Department will check surface tolerance utilizing the following methods :

a.) A 5 m [16 ft] straightedge or string line placed directly on the surface, parallel to the centerline of pavement.
b.) A 3 m [10 ft] straightedge or string line placed directly on the surface, transverse to the centerline of pavement.

The Contractor shall correct variations exceeding 6 mm [¼ in] by removing defective work and replacing it with new material as directed by the Department. The Contractor shall furnish a 10 foot straightedge for the Departments use.

401.11 Preparation of Existing Surface The Contractor shall thoroughly clean the surface upon which Hot Mix Asphalt Pavement is to be placed of all objectionable material. When the surface of the existing base or pavement is irregular, the Contractor shall bring it to uniform grade and cross section. All surfaces shall have a tack coat applied prior to placing any new HMA course. Tack coat shall conform to the requirements of Section 409 – Bituminous Tack Coat, Section 702 – Bituminous Material, and all applicable sections of the contract.

401.12 Hot Mix Asphalt Documentation The Contractor and the Department shall agree on the amount of Hot Mix Asphalt Pavement that has been placed each day.

401.13 Preparation of Aggregates The Contractor shall dry and heat the aggregates for the HMA to the required temperature. The Contractor shall properly adjust flames to avoid physical damage to the aggregate and to avoid depositing soot on the aggregate.

401.14 Mixing The Contractor shall combine the dried aggregate in the mixer in the amount of each fraction of aggregate required to meet the JMF. The Contractor shall measure the amount of PGAB and introduce it into the mixer in the amount specified by the JMF.

The Contractor shall produce the HMA at the temperature established by the JMF.

The Contractor shall dry the aggregate sufficiently so that the HMA will not flush, foam excessively, or displace excessively under the action of the rollers. The Contractor shall introduce the aggregate into the mixer at a temperature of not more than 14°C [25°F] above the temperature at which the viscosity of the PGAB being used is 0.150 Pa•s.

The Contractor shall store and introduce into the mixer the Performance Graded Asphalt Binder at a uniformly maintained temperature at which the viscosity of the PGAB is between 0.150 Pa•s and 0.300 Pa•s. The aggregate shall be coated completely and uniformly with a thorough distribution of the PGAB. The Contractor shall determine the wet mixing time for each plant and for each type of aggregate used.

401.15 Spreading and Finishing On areas where irregularities or unavoidable obstacles make the use of mechanical spreading and finishing equipment impracticable, the Contractor shall spread, rake, and lute the HMA with hand tools to provide the required compacted thickness.

On roads opened to two-way traffic, the Contractor shall place each course over the full width of the traveled way section being paved that day, unless otherwise noted by the Department in Section 403 - Hot Bituminous Pavement.

401.16 Compaction Immediately after the Hot Mix Asphalt Pavement has been spread, struck off, and any surface irregularities adjusted, the Contractor shall thoroughly and uniformly compact the HMA by rolling.

The Contractor shall roll the surface when the mixture is in the proper condition and when the rolling does not cause undue displacement, cracking, or shoving. The Contractor shall prevent adhesion of the HMA to the rollers or vibrating compactors without the use of fuel oil or other petroleum based release agents.

The Contractor shall immediately correct any displacement occurring as a result of the reversing of the direction of a roller or from other causes to the satisfaction of the Department. Any operation other than placement of variable depth shim course that results in breakdown of the aggregate shall be discontinued. Any new pavement that shows obvious cracking, checking, or displacement shall be removed and replaced for the full lane width as directed by the Resident at no cost to the Department.

Along forms, curbs, headers, walls, and other places not accessible to the rollers, the Contractor shall thoroughly compact the HMA with mechanical vibrating compactors. The Contractor shall only use hand tamping in areas inaccessible to all other compaction equipment. On depressed areas, the Contractor may use a trench roller or cleated compression strips under a roller to transmit compression to the depressed area.

Any HMA that becomes unacceptable due to cooling, cracking, checking, segregation or deformation as a result of an interruption in mix delivery shall be removed and replaced, with material that meets contract specifications at no cost to the Department.

401.17 Joints The Contractor shall construct wearing course transverse joints in such a manner that minimum tolerances shown in Section 401.101 - Surface Tolerances are met when measured with a straightedge.

The paver shall always maintain a uniform head of HMA during the joint construction. The HMA shall be free of segregation and meet temperature requirements outlined in section 401.04. Transverse joints of the wearing course shall be straight and neatly trimmed. The Contractor may form a vertical face exposing the full depth of the course by inserting a header, by breaking the bond with the underlying course, or by cutting back with hand tools. The Department may allow feathered or "lap" joints on lower courses or when matching existing low type pavements.

Longitudinal joints shall be constructed in a manner that will best ensure joint integrity. Methods or activities that prove detrimental to the construction of sound longitudinal joints will be discontinued.

The Contractor shall apply a coating of emulsified asphalt immediately before paving all joints to the vertical face and 75 mm [3 in] of the adjacent portion of any pavement being overlaid except those formed by pavers operating in echelon. The Contractor shall use an approved spray apparatus designed for covering a narrow surface. The Department may approve application by a brush for small surfaces, or in the event of a malfunction of the spray apparatus, but for a period of not more than one working day.

Where pavement under this contract joins an existing pavement or when the Department directs, the Contractor shall cut the existing pavement along a smooth line, producing a neat, even, vertical joint. The Department will not permit broken or raveled edges. The cost of all work necessary for the preparation of joints is incidental to related contract pay items.

401.18 Quality Control Method A, B & C The Contractor shall operate in accordance with the approved Quality Control Plan (QCP) to assure a product meeting the contract requirements. The QCP shall meet the requirements of Section 106.6 - Acceptance and this Section. The Contractor shall not begin paving operations until the Department approves the QCP in writing.

Prior to placing any mix, the Department and the Contractor shall hold a Pre-paving conference to discuss the paving schedule, source of mix, type and amount of equipment to be used, sequence of paving pattern, rate of mix supply, random sampling, project lots and sublots and traffic control. A copy of the QC random numbers to be used on the project shall be provided to The Resident. The Departments' random numbers for Acceptance testing shall be generated and on file with the Resident and the Project Manager. All field and plant supervisors including the responsible onsite paving supervisor shall attend this meeting.

The QCP shall address any items that affect the quality of the Hot Mix Asphalt Pavement including, but not limited to, the following:

a. JMF(s)
b. Hot mix asphalt plant details
c. Stockpile Management (to include provisions for a minimum 2 day stockpile)
d. Make and type of paver(s)
e. Make and type of rollers including weight, weight per inch of steel wheels, and average contact pressure for pneumatic tired rollers
f. Name of QCP Administrator, and certification number
g. Name of Process Control Technician(s) and certification number(s)
h. Name of Quality Control Technicians(s) and certification number(s)
i. Mixing & transportation including process for ensuring that truck bodies are clean and free of debris or contamination that could adversely affect the finished pavement
j. Testing Plan

k. Laydown operations including longitudinal joint construction, procedures for avoiding paving in inclement weather, type of release agent to be used on trucks tools and rollers, compaction of shoulders, tacking of all joints, methods to ensure that segregation is minimized, procedures to determine the maximum rolling and paving speeds based on best engineering practices as well as past experience in achieving the best possible smoothness of the pavement
l. Examples of Quality Control forms including a daily plant report and a daily paving report
m. Silo management and details (can show storage for use on project of up to 36 hours)
n. Provisions for varying mix temperature due to extraordinary conditions
o. Name and responsibilities of the Responsible onsite Paving Supervisor
p. Method for calibration/verification of Density Gauge
q. A note that all testing will be done in accordance with AASHTO and the Maine DOT Policies and Procedures for HMA Sampling and Testing.
r. A note detailing conditions under which the percent of RAP will vary from that specified on the JMF.
s. A note detailing when production will be halted due to QC testing results.

The QCP shall include the following technicians together with these minimum requirements:

a. QCP Administrator - A qualified individual shall administer the QCP. The QCP Administrator must be a full-time employee of or a consultant engaged by the Contractor or paving subcontractor. The QCP Administrator shall have full authority to institute any and all actions necessary for the successful operation of the QCP. The QCP Administrator (or its designee in the QCP Administrator's absence) shall be available to communicate with the Department at all times. The QCP Administrator shall be certified as a Quality Assurance Technologist certified by the New England Transportation Technician Certification Program (NETTCP).

b. Process Control Technician(s) (PCT) shall utilize test results and other quality control practices to assure the quality of aggregates and other mix components and control proportioning to meet the JMF(s). The PCT shall inspect all equipment used in mixing to assure it is operating properly and that mixing conforms to the mix design(s) and other Contract requirements. The QCP shall detail how these duties and responsibilities are to be accomplished and documented, and whether more than one PCT is required. The Plan shall include the criteria to be utilized by the PCT to correct or reject unsatisfactory materials. The PCT shall be certified as a Plant Technician by the NETTCP.

c. Quality Control Technician(s) (QCT) shall perform and utilize quality control tests at the job site to assure that delivered materials meet the requirements of the JMF(s). The QCT shall inspect all equipment utilized in transporting, laydown, and compacting to assure it is operating properly and that all laydown and compaction conform to the Contract requirements. The QCP shall detail how these duties and responsibilities are to be accomplished and documented, and whether more than one QCT is required. The QCP shall include the criteria utilized by the QCT to correct or reject unsatisfactory materials. The QCT shall be certified as a Paving Inspector by the NETTCP.

The QCP shall detail the coordination of the activities of the Plan Administrator, the PCT and the QCT. The Project Superintendent shall be named in the QCP, and the responsibilities for successful implementation of the QCP shall be outlined.

The Contractor shall sample, test, and evaluate Hot Mix Asphalt Pavement in accordance with the following minimum frequencies:

TABLE 2 : MINIMUM QUALITY CONTROL FREQUENCIES

Test or Action	Frequency	Test Method
Temperature of mix	6 per day at street and plant	-
Temperature of mat	4 per day	-
%TMD (Surface)	1 per 115 Mg [125 ton] (As noted in QC Plan)	ASTM D2950
%TMD (Base)	1 per 225 Mg [250 ton] (As noted in QC Plan)	AASHTO T269
Fines / Effective Binder	1 per 450 Mg [500 ton]	AASHTO T 312*
Gradation	1 per 450 Mg [500 ton]	AASHTO T30
PGAB content	1 per 460 Mg [500 ton]	AASHTO T164 or T308
Voids at N_{design}	1 per 450 Mg [500 ton]	AASHTO T 312*
Voids in Mineral Aggregate at N_{design}	1 per 450 Mg [500 ton]	AASHTO T 312*
Rice Specific Gravity	1 per 450 Mg [500 ton]	AASHTO T209
Coarse Aggregate Angularity	1 per 4500 Mg [5000 ton]	ASTM D5821
Flat and Elongated Particles	1 Per 4500 Mg [5000 ton]	ASTM D4791
Fine Aggregate Angularity	1 Per 4500 Mg [5000 ton]	AASHTO T304

*Method A and B only.

The Contractor may utilize innovative equipment or techniques not addressed by the Contract documents to produce or monitor the production of the mix, subject to approval by the Department.

The Contractor shall submit all Hot Mix Asphalt Pavement plant test reports, inspection reports and updated pay factors in writing, signed by the appropriate technician and present them to the Department by 1:00 P.M. on the next working day, except when otherwise noted in the QCP due to local restrictions. The Contractor shall also retain splits of the previous 5 QC tests, with QC results enclosed for random selection and testing by The Department during QA inspections of the HMA production facility. Test results of splits that do not meet the Dispute Resolution Variance Limits in Table 10 shall trigger an investigation by the MDOT Independent Assurance Unit, and may result in that lab losing NETTCP certification and the ability to request a dispute [Section 401.223 - Process for Dispute Resolution (Methods A , B and C only)].

The Contractor shall make density test results, including randomly sampled densities, available to the Department onsite. Summaries of each day's results, including a daily paving report, shall be recorded and signed by the QCT and presented to the Department by 1:00 p.m. the next working day.

The Contractor shall have a testing lab at the plant site, equipped with all testing equipment necessary to complete the tests in Table 2. The Contractor shall locate an approved SHRP Gyratory Compactor at the plant testing lab or within 30 minutes of the plant site.

The Contractor shall fill all holes in the pavement resulting from cutting cores by the Contractor or the Department with a properly compacted, acceptable mixture no later than the following working day. Before filling, the Contractor shall carefully clean the holes and apply a coating of emulsified asphalt. On surface courses, cores shall not be cut except for Verification of the Nuclear Density Gauge, at a rate not to exceed 3 per day or 2 per 900 Mg [1000 ton] placed.

The Contractor shall monitor plant production using running average of three control charts as specified in Section 106 - Quality. Control limits shall be as noted in Table 3 below. The UCL and LCL, shall not exceed the allowable control points for the particular type of mixture as outlined in Table 1 of section 703.09

TABLE 3: Control Limits

Property	UCL and LCL
Passing 4.75 mm and larger sieves	Target +/-4.0
Passing 2.36 mm sieve	Target +/-2.5
Passing .075 mm sieve	Target +/-1.2
PGAB Content*	Target +/-0.3
Voids in the Mineral Aggregate	LCL = LSL + 0.2
% Voids at N_{design}	JMF Target +/-1.3

*Based on AASHTO T 308

The Contractor shall cease paving operations whenever one of the following occurs on a lot in progress:

a. Methods A and B: The Pay Factor for VMA, Voids @ N_d, Percent PGAB, composite gradation, VFB, fines to effective binder or density using all Acceptance or all Quality Control tests for the current lot is less than 0.85. Method C: The Pay Factor for VMA, Voids @ N_d, Percent PGAB, percent passing the nominal maximum sieve, percent passing 2.36 mm sieve, percent passing 0.300 mm sieve or percent passing 0.075 mm sieve using all Acceptance or all available Quality Control tests for the current lot is less than 0.85.

b. The Coarse Aggregate Angularity or Fine Aggregate Angularity value falls below the requirements of Table 3: Aggregate Consensus Properties Criteria for the design traffic level.

c. Each of the first 2 control tests for a Method A or B lot fall outside the upper or lower limits for VMA, Voids @ Nd, or Percent PGAB; or under Method C, each of the first 2 control tests for the lot fall outside the upper or lower limits for the individual gradation sieve sizes as required in Table 3, or Percent PGAB.

d. The Flat and Elongated Particles value exceeds 10% by ASTM D4791.

e. There is any visible damage to the aggregate due to over-densification other than on variable depth shim courses.

f. The Contractor fails to follow the approved QCP.

g. The Contractor's control chart shows the process to be out of control (defined as a single point outside of the control limits on the running average of three chart.) on any property listed in Table 3: Control Limits.

Paving operations shall not resume until the Contactor and the Department determines that material meeting the Contract requirements will be produced. The Department will consider corrective action acceptable if the pay factor for the failing property increases, based on samples already in transit, or a verification sample is tested and the property falls within the specification limits.

The Department retains the exclusive right, with the exception of the first day's production of a new JMF, to determine whether the resumption of production involves a significant change to the production process. If the Department so determines, then the current lot will be terminated, a pay factor established, and a new lot will begin.

401.19 Quality Control Method D For Items covered under Method D, the Contractor shall submit a modified QC Plan detailing, how the mix is to be placed, what equipment is to be used, and what HMA plant is to be used. All mix designs (JMF) shall be approved and verified by MDOT prior to use. Certified QC personnel shall not be required. The Contractor shall certify the mix and the test results for each item by a Certificate of Compliance.

401.20 Acceptance Method A, B & C These methods utilizes Quality Level Analysis and pay factor specifications.

For Hot Mix Asphalt Pavement designated for acceptance under Quality Assurance provisions, the Department will sample once per sublot on a statistically random basis, test, and evaluate in accordance with the following Acceptance Criteria:

TABLE 4: ACCEPTANCE CRITERIA

PROPERTIES	POINT OF SAMPLING	TEST METHOD
Gradation	Paver Hopper	AASHTO T30
PGAB Content	Paver Hopper	AASHTO T308
%TMD (Surface)	Mat behind all Rollers	AASHTO T269
%TMD (Base or Binder)	Mat behind all Rollers	**AASHTO** T269
Air Voids at N_d	Paver Hopper	AASHTO T 312
%VMA at N_d	Paver Hopper	AASHTO T 312
Fines to Effective Binder	Paver Hopper	AASHTO T 312
%VFB	Paver Hopper	AASHTO T 312

On the first day of production in the current calendar year, or the first day of production of a new JMF the Department will take three random samples, which will be used to calculate the quality level of the in-place material in the event the lot is terminated prematurely. Only one of the three will be tested, the other two will be held onsite until at least three random samples have been taken, at which time the other two will be discarded.

Lot Size For purposes of evaluating all acceptance test properties, a lot shall consist of the total quantity represented by each item listed under the lot size heading.

If the Department terminates a Lot prematurely, the samples from the first day's production will be used to calculate a volumetric pay factor, and a minimum of three cores will be used for a density pay factor, if applicable, for quantities placed to date.

Sublot size - Refer to section 401.201, 401.202, and 401.203 for minimum size and number of sublots. The quantity represented by each sample will constitute a sublot.

If there is less than one-half of a sublot remaining at the end, then it shall be combined with the previous sublot. If there is more than one-half sublot remaining at the end, then it shall constitute the last sublot and shall be represented by test results. If it becomes apparent partway through a Lot that, due to an underrun, there will be insufficient mix quantity to obtain the minimum number of sublots needed, the Resident may adjust the size of the remaining sublots and select new sample locations based on the estimated quantity of material remaining in the Lot.

Acceptance Testing The Department will obtain samples of Hot Mix Asphalt Pavement in conformance with AASHTO T168 Sampling Bituminous Paving Mixtures, and the Maine DOT Policies and Procedures for HMA Sampling and Testing, which will then be transported by the Contractor to the designated MDOT Laboratory within 48 hours (except when otherwise noted in the project specific QCP due to local restrictions), as directed by MDOT in approved transport containers to be provided by the Department, unless otherwise directed by the Resident. The Department will take the sample randomly within each sublot. Target values shall be as specified in the JMF. The Department will use Table 5 for calculating pay factors for gradation, PGAB Content, Air Voids at N_{design}, VMA, Fines to Effective Binder and VFB. The Department will withhold reporting of the test results for the Acceptance sample until 7:00 AM, on the second working day of receipt of the sample, or after receipt of the Contractors results of the Acceptance sample split. Upon conclusion of each lot, where there is a minimum of four sublots, results shall be examined for statistical outliers, as stated in Section 106.7.2 - Statistical Outliers.

Isolated Areas During the course of inspection, should it appear that there is an isolated area that is not representative of the lot based on a lack of observed compactive effort, excessive segregation or any other questionable practice, that area may be isolated and tested separately. An area so isolated that has a calculated pay factor below 0.80, based on three random tests shall be removed and replaced at the expense of the Contractor for the full lane width and a length not to be less than 50 m [150 ft].

Pavement Density The Department will measure pavement density using core samples tested according to AASHTO T-166. The Department will randomly determine core locations. The Contractor shall cut 6 inch diameter cores at no additional cost to the Department by the end of the working day following the day the pavement is placed, and immediately give them to the Department. The cores will be placed in a transport container provided by the Department and transported by the Contractor to the designated MDOT Lab as directed by the Department. Pre-testing of the cores will not be allowed. At the time of sampling, the Contractor and the Department shall mutually determine if a core is damaged. If it is determined that the core(s) is damaged, the Contractor shall cut new core(s) at the same offset and within 1 m [3 ft] of the initial sample. At the time the core is cut, the Contractor and the Department will mutually determine if saw cutting of the core is needed, and will mark the core at the point where sawing is needed. The core may be saw cut by the Contractor in the Department's presence onsite, or in an MDOT Lab by The Department, without disturbing the layer being tested to remove lower layers of Hot Mix Asphalt Pavement, gravel, or RAP. No recuts are allowed at a test location after the core has been tested. Upon conclusion of each lot, density results shall be examined for statistical outliers as stated in Section 106.7.2.

On all sections of overlay with wearing courses designed to be 19 mm [3/4 in] or less in thickness, there shall be no pay adjustment for density otherwise noted in Section 403 - Hot Bituminous Pavement. For overlays designed to be 19 mm [3/4 in] or less in thickness, density shall be obtained by the same rolling train and methods as used on mainline travelway surface courses with a pay adjustments for density, unless otherwise directed by the Department.

There shall be no pay adjustment for density on shoulders unless otherwise noted in Section 403 - Hot Bituminous Pavement. Density for shoulders shall be obtained by the same rolling train and methods as used on mainline travelway, unless otherwise directed by the Department. Efforts to obtain optimum compaction will not be waived by the Department unless it is apparent during construction that local conditions make densification to this point detrimental to the finished pavement surface course.

401.201 Method A Lot Size will be the entire production per JMF for the project, or if so agreed at the Pre-paving Conference, equal lots of up to 4050 Mg [4500 tons], with unanticipated over-runs of up to 1350 Mg [1500 ton] rolled into the last lot. Sublot sizes shall be 675 Mg [750 ton] for mixture properties, 450 Mg [500 ton] for base or binder densities and 225 Mg [250 ton] for surface densities. The minimum number of sublots for mixture properties shall be 4, and the minimum number of sublots for density shall be five.

TABLE 5: METHOD A ACCEPTANCE LIMITS

Property	USL and LSL
Passing 4.75 mm and larger sieves	Target +/-7%
Passing 2.36 mm to 1.18 mm sieves	Target +/-4%
Passing 0.60 mm	Target +/-3%
Passing 0.30 mm to 0.075 mm sieve	Target +/-2%
PGAB Content	Target +/-0.4%
Air Voids	4.0% +/-1.5%
Fines to Effective Binder	0.6 to 1.2
Voids in the Mineral Aggregate	LSL Only from Table 1
Voids Filled with Binder	Table 1 values plus a 4% production tolerance for USL only
% TMD (In place density)	95.0% +/- 2.5%

401.202 Method B Lot Size will be the entire production per JMF for the project and shall be divided into 3 equal sublots for Mixture Properties and 3 equal sublots for density.

TABLE 6: METHOD B ACCEPTANCE LIMITS

Property	USL and LSL
Percent Passing 4.75 mm and larger sieves	Target +/-7
Percent Passing 2.36 mm to 1.18 mm sieves	Target +/-5
Percent Passing 0.60 mm	Target +/-4
Percent Passing 0.30 mm to 0.075 mm sieve	Target +/-3
PGAB Content	Target +/-0.5
Air Voids	4.0% +/-2.0
Fines to Effective Binder	0.6 to 1.4
Voids in the Mineral Aggregate	LSL from Table 1
Voids Filled with Binder	Table1 plus a 4% production tolerance for USL.
% TMD (In-place Density)	95.0% +/- 2.5%

401.203 Testing Method C Lot Size will be the entire production per JMF for the project, or if so agreed at the Pre-paving Conference, equal lots of up to 4050 Mg [4500 tons], with unanticipated over-runs of up to 1350 Mg [1500 ton] rolled into the last lot. Sublot sizes shall be 675 Mg [750 ton] for mixture properties, 450 Mg [500 ton] for base or binder densities and 225 Mg [250 ton] for surface densities. The minimum number of sublots for mixture properties shall be 4, and the minimum number of sublots for density shall be five.

TABLE 7: METHOD C ACCEPTANCE LIMITS

Property	USL and LSL
Passing 4.75 mm and larger sieves	Target +/-7%
Passing 2.36 mm to 1.18 mm sieves	Target +/-4%
Passing 0.60 mm	Target +/-3%
Passing 0.30 mm to 0.075 mm sieve	Target +/-2%
PGAB Content	Target +/-0.4%
Air Voids	4.0% +/-1.5%
Fines to Effective Binder	0.6 to 1.2
Voids in the Mineral Aggregate	LSL Only from Table 1
Voids Filled with Binder	Table 1 values plus a 4% production tolerance for USL only
% TMD (In place density)	95.0% +/- 2.5%

401.204 Testing Method D For hot mix asphalt items designated as Method D in Section 403 - Hot Bituminous Pavement, one sample will be taken from the paver hopper or the truck body per 225 Mg [250 ton] per pay item. The mix will be tested for gradation and PGAB content. Disputes will not be allowed. If the mix is within the tolerances listed in Table 8: Method D Acceptance Limits, the Department will pay the contract unit price. If the test results for each 225 Mg [250 ton] increment are outside these limits, the following deductions (Table 8b) shall apply to the HMA quantity represented by the test.

TABLE 8: METHOD D ACCEPTANCE LIMITS

Property	USL and LSL
Percent Passing 4.75 mm and larger sieves	Target +/-7
Percent Passing 2.36 mm to 1.18 mm sieves	Target +/-5
Percent Passing 0.60 mm	Target +/-4
Percent Passing 0.30 mm to 0.075 mm sieve	Target +/-3
PGAB Content	Target +/-0.5
% TMD (In-place Density)	95.0% +/- 2.5%

TABLE 8b Method "D" Price Adjustments

PGAB Content	-5%
2.36 mm sieve	-2%
0.30 mm sieve	-1%
0.075 mm sieve	-2%
Density	-10%*

*Only applies when called for in Section 403 - Hot Bituminous Pavement. Contractor shall cut two 150 mm [6 in] cores, which shall be tested for percent TMD per AASHTO T-269. If the average for the two tests falls below 92.5% the disincentive shall apply.

401.21 Method of Measurement The Department will measure Hot Mix Asphalt Pavement by the Mg [ton] in accordance with Section 108.1 - Measurement of Quantities for Payment.

401.22 Basis of Payment The Department will pay for the work, in place and accepted, in accordance with the applicable sections of this Section, for each type of HMA specified.

The Department will pay for the work specified in Section 401.11, for the HMA used, except that cleaning objectionable material from the pavement and furnishing and applying bituminous material to joints and contact surfaces is incidental.

Payment for this work under the appropriate pay items shall be full compensation for all labor, equipment, materials, and incidentals necessary to meet all related contract requirements, including design of the JMF, implementation of the QCP, obtaining core samples, transporting cores and samples, filling core holes, applying emulsified asphalt to joints, and providing testing facilities and equipment.

The Department will make a pay adjustment for quality as specified below.

401.221 Pay Adjustment The Department will sample, test, and evaluate Hot Mix Asphalt Pavement in accordance with Section 106 - Quality and Section 401.20 - Acceptance, of this Specification.

401.222 Pay Factor (PF) The Department will use the following criteria for pay adjustment using the pay adjustment factors under Section 106.7 - Quality Level Analysis:

Density If the pay factor for Density falls below 0.80 for Method A or C or 0.86 for Method B, all of the cores will be randomly recut by Sublot. A new pay factor will be calculated that combines all initial and retest results. If the resulting pay factor is below 0.80 for Method A or C or below 0.86 for Method B, the entire Lot shall be removed and replaced with material meeting the specifications at no additional cost to the Department, except that the Department may, when it appears that there is a distinct pattern of defective material, isolate any defective material by investigating each mix sample sublot and require removal of defective mix sample sublots only, leaving any acceptable material in place if it is found to be free of defective material. Pay factors equal to or greater than the reject level will be paid accordingly.

Gradation For HMA evaluated under Acceptance Method A or B, the Department will determine a composite pay factor (CPF) using applicable price adjustment factors "f" from Table 9: Table of Gradation Composite "f" Factors, and Acceptance limits from Table 5: Method A Acceptance Limits, for Method A or Table 6: Method B Acceptance Limits, for Method B. The Department will not make price adjustments for gradation on Methods A and B, but will monitor them as shutdown criteria.

TABLE 9: TABLE OF GRADATION COMPOSITE " f " FACTORS
(Methods A and B)

Constituent		"f" Factor			
		19 mm	12.5 mm	9.5 mm	4.75 mm
Gradation	25 mm	-	-	-	-
	19 mm	4	-	-	-
	12.5 mm		4	4	-
	9.50 mm				4
	2.36 mm	6	6	6	8
	1.18 mm				
	0.60 mm	2	2	2	2
	0.30 mm	2	2	2	2
	0.075 mm	6	6	6	8

For HMA evaluated under Acceptance Method C, the Department will determine a pay factor using acceptance limits from Table **7**: Method C Acceptance Limits.

VMA, Air Voids, VFB and Fines to Effective Binder The Department will determine a pay factor (PF) using the applicable Acceptance Limits.

The following variables will be used for pay adjustment:

PA = Pay Adjustment
Q = Quantity represented by PF in Mg [ton]
P = Contract price per Mg [ton]
PF = Pay Factor

Pay Adjustment Method A

The Department will use the following criteria for pay adjustment: density, Performance Graded Asphalt Binder content, voids @N_d, VMA, VFB, F/B_{eff}, and the screen sizes listed in Table 9 for the type of HMA represented in the JMF. If any pay factor for any single property or composite gradation falls below 0.85, the Contractor shall shut down the HMA plant. If any single pay factor for PGAB Content, VMA, or Air Voids falls below 0.80, then the composite pay factor for PGAB Content, VMA, and Air Voids shall be 0.55.

Density: For mixes having a density requirement, the Department will determine a pay factor using Table 5: Method A Acceptance Limits:

PA = (density PF- 1.0)(Q)(P)x0.50

PGAB Content, VMA and Air Voids: The Department will determine a pay adjustment using Table 5: Method A Acceptance Limits as follows:

PA = (voids @ N_d PF- 1.0)(Q)(P)x0.20 + (VMA @ N_d PF- 1.0)(Q)(P)x0.20 + (PGAB PF- 1.0)(Q)(P)x0.10

VFB and Fines to Effective Binder The Department will determine a pay factor (PF) using Table 5: Method A Acceptance Limits. The Department will not make price adjustments for VFB or Fines to Effective Binder, but will monitor them as shutdown criteria.

Pay Adjustment Method B

The Department will use the following criteria for pay adjustment: density, Performance Graded Asphalt Binder content, voids @N_d, VMA, VFB, F/B_{eff}, and the screen sizes listed in Table 9 for the type of HMA represented in the JMF. If any pay factor for any single property or composite gradation falls below 0.90, the Contractor shall shut down the HMA plant. If any single pay factor for PGAB Content, VMA, or Air Voids falls below 0.86, then the composite pay factor for PGAB Content, VMA, and Air Voids shall be 0.70.

Density: For mixes having a density requirement, the Department will determine a pay factor using Table 6: Method B Acceptance Limits:

PA = (density PF- 1.0)(Q)(P)x0.50

PGAB Content, VMA and Air Voids: The Department will determine a pay adjustment using Table 6: Method B Acceptance Limits as follows:

PA = (voids @ N_d PF- 1.0)(Q)(P)x0.20 + (VMA @ N_d PF- 1.0)(Q)(P)x0.20 + (PGAB PF- 1.0)(Q)(P)x0.10

VFB and Fines to Effective Binder The Department will determine a pay factor (PF) using Table 6: Method B Acceptance Limits. The Department will not make price adjustments for VFB or Fines to Effective Binder, but will monitor them as shutdown criteria.

Pay Adjustment Method C

The Department will use density, Performance Graded Asphalt Binder content, and the screen sizes listed in Table **7** for the type of HMA represented in the JMF. If any pay factor for any single property falls below 0.85, the Contractor shall shut down the HMA plant. If the PGAB content falls below 0.80, then the PGAB pay factor shall be 0.55. If the percent passing the nominal maximum sieve, the 2.36 mm sieve, the 0.300 mm sieve or the 0.075 mm sieve for Method C falls below 0.80, then the composite pay factor for the four sieves shall be 0.55.

Density: For mixes having a density requirement, the Department will determine a pay factor using Table 7: Method C Acceptance Limits:

PA = (density PF- 1.0)(Q)(P)x0.50

PGAB Content and Gradation The Department will determine a pay factor using Table **7**: Method C Acceptance Limits. The Department will calculate the price adjustment for Mixture Properties as follows:

PA = (% Passing Nom. Max PF-1.0)(Q)(P)X0.05+(% passing 2.36 mm PF-1.0)(Q)(P)X0.05+(%passing 0.30 mm PF-1.0)(Q)(P)X0.05+(%passing 0.075 mm PF-1.0)(Q)(P)X0.10+(PGAB PF-1.0)(Q)(P)X0.25

VMA, Air Voids, VFB and Fines to Effective Binder The Department will determine a pay factor (PF) using Table 7: Method C Acceptance Limits. The Department will not make price adjustments for VMA, Air Voids, VFB or Fines to Effective Binder, but will monitor them as shutdown criteria.

Pay Adjustment Method D

The Department will use density, Performance Graded Asphalt Binder content, and the screen sizes listed in Table 8b for the type of HMA represented in the JMF. If test results do not meet the Table 8 requirements, deducts as shown in Table 8b shall be applied to the quantity of mix represented by the test.

401.223 Process for Dispute Resolution (Methods A B & C only)

a. Dispute Resolution sampling At the time of Hot-Mix Asphalt sampling, the Department will obtain a split sample of each Acceptance test random sample for possible dispute resolution testing. The Contractor shall also obtain a split sample of the HMA at this same time. If the Contractor wishes to retain the option of requesting dispute testing of the initial Acceptance sample, the Contractor will test their split of the

Acceptance sample and shall report their results to the Resident, with a copy to the QA Engineer at the Central Laboratory in Bangor by 7:00 AM, on the second working day from time of QA sampling, otherwise dispute resolution will not be initiated. The Department's dispute resolution split sample will be properly labeled and stored for a period of not more than two weeks, or until the sample is tested.

b. Disputing Acceptance results The Contractor may dispute the Department's Acceptance results and request (Methods A, B, & C) that the dispute resolution split sample be tested by notifying the Department's Resident and the QA Engineer at the Central Laboratory in Bangor in writing within two working days after receiving the results of the Acceptance test. The following shall be provided in the request:

- Acceptance sample reference number
- The specific test result(s) or property(ies) being disputed, and
- The complete, signed report of the Contractor's testing (In a lab certified by the NETTCP and MDOT) of their split of the Acceptance sample indicating that the variances in Table10: Dispute Resolution Variance Limits, for the specific test result(s) or property(ies) were exceeded.

c. Disputable items The Contractor may dispute any or all of the following test results when the difference between the Department's value and the Contractor's value for that test equals or exceeds the corresponding allowable variation in Table 10: Dispute Resolution Variance Limits, PGAB content, G_{mb}, and G_{mm}. In addition, if the allowable variation for these tests is not met or exceeded, the Contractor may dispute either or both of the following material properties provided the difference between results for them equals or exceeds the corresponding allowable variation in Table 10: Voids at N_{design}, and VMA. For Method C only, % passing may only be disputed on sieves which are used for price adjustments

d. Outcome The value of any disputed result or property reported for the initial Acceptance sample shall stand if the value reported for the dispute resolution sample is not closer to the value the Contractor reported for their split sample than to the value reported for the initial Acceptance sample. If the value

reported for the dispute resolution falls precisely half-way between the other two values the value reported for the dispute resolution will replace the original acceptance value. Otherwise, the value reported for the dispute resolution sample will replace the value reported for the initial Acceptance sample, and will be used to re-calculate any other affected results or properties.

TABLE 10: DISPUTE RESOLUTION VARIANCE LIMITS

PGAB Content	+/-0.4%
G_{mb}	+/-0.030
G_{mm}	+/-0.020
Voids @ N_d	+/-0.8%
VMA	+/-0.8%
Passing 4.75 mm and larger sieves	+/- 4.0%
Passing 2.36 mm to 0.60 mm sieves	+/- 3.0%
Passing 0.30 mm to 0.15	+/- 2.0 %
0.075 mm sieve	+/- 1.0%

SECTION 402 - PAVEMENT SMOOTHNESS

402.00 Smoothness Projects Projects to have their pavement smoothness analyzed in accordance with this Specification will be so noted in Special Provision 403 - Bituminous Box

402.01 Pavement Smoothness The final pavement surface shall be evaluated for smoothness using a Class I or Class II profiler as defined by ASTM E950 (94). Smoothness measurements will be expressed in terms of the International Roughness Index (IRI) as defined by the World Bank, in units of inches/mile.

402.02 Lot Size Lot size for smoothness will be 1000 lane-meters [3000 lane-feet]. A sublot will consist of 20 lane-meters [50 lane-feet]. Partial lots will be included in the previous lot if less than one-half the size of a normal lot. If equal to or greater than one-half the normal lot size, it will be tested as a separate lot.

402.03 Acceptance Testing The Department will conduct Acceptance testing following completion of the surface course. Sections to be excluded from testing include the following:

Bridge decks and joints (no smoothness measurements will be taken within 30 m [100 ft] of bridge joints)
Acceleration and deceleration lanes
Shoulders and ramps
Side streets and roads
Within 30 m [100 ft] of transverse joints at the beginning and end of the project
Within 30 m [100 ft] of railroad crossings
Urban areas with speed limits of 50 kph [30 mph] or lower

Each lot shall have 2 measurements made in each wheel path. The average of the 4 measurements will determine the smoothness for that lot.

The smoothness measurements will be statistically evaluated for pay factors as described in Subsection 106.7 - Quality Level Analysis, using the specification limits shown below.

ACCEPTANCE LIMITS

Level	USL
I	1.10 m/km [70 in/mile]
II	1.25 m/km [80 in/mile]
III	1.40 m/km [90 in/mile]

Computation of Smoothness Pay Adjustment:

PA = (PF-1.0)(Q)(P)
where:
Q = Quantity of surface course in the Lot (excluding shoulders, side streets, bridge decks, ramps, acceleration and deceleration lanes)
PF = smoothness pay factor for the Lot
P = Contract unit price for surface pavement
PA = pay adjustment

402.04 Unacceptable Work In the event that any Lot is found to have a pay factor less than 0.80, the Contractor shall take whatever remedial action is required to correct the pavement surface in that Lot at no additional expense to the Department. Such remedial action may include but is not limited to removal and replacement of the unacceptable pavement. In the event remedial action is necessary, the Contractor shall

submit a written plan to the Resident outlining the scope of the remedial work. The Resident must approve this plan before the remedial work can begin. Following remedial work, the Lot shall be retested, and will be subject to the specification limits listed above. The resulting pay factor, if within the acceptable range, will be used in the final pay adjustment. The Contractor shall pay the cost of retesting the pavement following corrective action.

Localized surface tolerance defects will be subject to the provisions outlined in Section 401.101 Surface Tolerances.

Payment will be made under:

Pay Item	Pay Unit
402.10 Incentive/Disincentive - Pavement Smoothness	Lump Sum

SECTION 403 - HOT BITUMINOUS PAVEMENT

403.01 Description This work shall consist of constructing one or more courses of bituminous pavement on an approved base in accordance with these specifications, and in reasonably close conformity with the lines, grades, thickness and typical cross sections shown on the plans or established.

The bituminous pavement shall be composed of a mixture of aggregate, filler if required, and bituminous material.

403.02 General The materials and their use shall conform to the requirements of Section 401 - Hot Mix Asphalt Pavement.

403.03 Construction The construction requirements shall be as specified in Section 401 - Hot Mix Asphalt Pavement.

In addition, hot bituminous pavement placed on bridges shall also conform to the following requirements.

a. The mixture shall be composed of aggregate, PGAB and mineral filler but no recycled asphalt pavement and placed in courses as specified in the Special Provisions.

b. The bottom course shall be placed with an approved rubber mounted bituminous paver of such type and operated in such a manner that the membrane waterproofing will not be damaged in any way.

c. The top course shall not be placed until the bottom course has cooled sufficiently to provide stability.

d. The Contractor will not be required to cut sample cores from the compacted pavement on the bridge deck.

e. After the top course has been placed, the shoulder areas shall be sealed 1 meter [3 ft] wide with two applications of an emulsified bituminous sealer meeting the requirements of Section 702.12 - Emulsified Bituminous Sealing Compound. The first application shall be pre-mixed with fine, sharp sand, similar to mortar sand, as needed to fill all voids in the mix in the area being sealed. The second application may be applied without sand. The sealer shall be carried to the curb at the gutter line in sufficient quantity to leave a bead or fillet of material at the face of the curb. The area to be sealed shall be clean, dry and the surface shall be at ambient temperature.

f. The furnishing and applying of the required quantity of sealer for the bridge shoulder areas shall be incidental to placing the hot bituminous pavement.

g. The atmospheric temperature for all courses on bridge decks shall be 10°C [50°F] or higher.

403.04 Method of Measurement Hot bituminous pavement will be measured as specified in Section 401.21-Method of Measurement.

403.05 Basis of Payment The accepted quantities of hot bituminous pavement will be paid for at the contract unit price per Megagram [ton] for the bituminous mixtures, including bituminous material complete in place.

Method A, Method B, Method C and Method D shall be used for acceptance as specified in Section 401 - Hot Mix Asphalt Pavements. (See Complementary Notes, Section 403 - Hot Bituminous Pavement, for Method location).

Payment will be made under:

Pay Item		Pay Unit
403.102	Hot Mix Asphalt Pavement for Special Areas	MG [Ton]
403.206	Hot Mix Asphalt, 25 mm Nominal Maximum Size	MG [Ton]
403.207	Hot Mix Asphalt, 19.0 mm Nominal Maximum Size	MG [Ton]
403.208	Hot Mix Asphalt, 12.5 mm Nominal Maximum Size	MG [Ton]
403.209	Hot Mix Asphalt, 9.5 mm Nominal Maximum Size (sidewalks, drives, islands & incidentals)	MG [Ton]
403.210	Hot Mix Asphalt, 9.5 mm Nominal Maximum Size	MG [Ton]
403.211	Hot Mix Asphalt (shimming)	MG [Ton]
403.212	Hot Mix Asphalt, 4.75 mm Nominal Maximum Size	MG [Ton]
403.213	Hot Mix Asphalt, 12.5 mm Nominal Maximum Size, Base	MG [Ton]

SPECIAL PROVISION
SECTION 403
HOT MIX ASPHALT OVERLAY

Desc. of Course	Grad. Design	Item Number	Bit Cont. % of Mix	Total Thick	No. Of Layers	Comp. Notes
			5" HMA Reconstruction Areas			
			Mainline Travelway			
Wearing	12.5mm	403.208	N/A	1 ½"	1	5,8,13
Base	12.5mm	403.213	N/A	1 ½"	1	5,7
Base	12.5mm	403.213	N/A	2"	1	5,7,21
			3" HMA Reconstruction Areas			
			Normal Shoulders			
Wearing	12.5mm	403.208	N/A	1 ½"	1	5,8,13
Base	12.5mm	403.213	N/A	1 ½"	1	5,7
			3" HMA Overlay			
			Approach Roads			
Wearing	12.5mm	403.208	N/A	1 ½"	1	5,8,13
Base	12.5mm	403.213	N/A	1 ½"	1	5,7
			Drives,Sidewalks, Misc.			
Wearing	9.5mm	403.209	N/A	2"	2/more	2,3,10,11,14

COMPLEMENTARY NOTES

2. The density requirements are waived.
3. The design traffic level for mix placed shall be <0.3 million ESALS.
5. The aggregate qualities shall meet the design traffic level of 3 to <10 million ESALS for mix placed under this contract.
7. Section 106.6 Acceptance, (1) Method A.
8. Section 106.6 Acceptance, (2) Method B.
10. Section 106.6 Acceptance, (2) Method D.
11. The combined aggregate gradation required for this item shall be classified as a 9.5mm "**fine graded "** mixture, (using the Primary Control Sieve control point) as defined in 703.09.
13. A mixture meeting the gradation of 9.5 mm hot mix asphalt may be used with the approval of the Department.
14. A mixture meeting the requirements of section 703.09 Grading 'D', with a minimum PGAB content of 6 %, and the limits of Special Provision 401, Table 9 (Drives and Sidewalks) for PGAB content and gradation may be substituted for this item. A job mix formula shall be submitted to the department for approval.
21. The combined aggregate gradation required for this layer shall be classified as a 12.5mm mixture, or a 19.0mm "**fine graded "** mixture (using the Primary Control Sieve control point) as defined in 703.09.

Tack Coat

A tack coat of emulsified asphalt, RS-1, Item 409.15 shall be applied to any existing pavement or recycled layer at a rate of approximately 0.025 gal/yd², and on milled pavement approximately 0.05 gal/yd², prior to placing a new course. A fog coat of emulsified asphalt shall be applied between shim / intermediate course and the surface course, at a rate not to exceed 0.025 gal/yd².

Tack used between layers of pavement will be paid for at the contract unit price for Item 409.15 Bituminous Tack Coat.

Kittery
11584.00
April 4, 2008

SPECIAL PROVISION
SECTION 603
Pipe Culverts and Storm Drains

603.12 Basis of Payment: This section shall be amended with the addition of the following:

Pay Item	Pay Unit
603.157 12” PVC Pipe	Linear Foot
603.175 18” RCP Class III	Linear Foot
603.177 18” PVC Pipe	Linear Foot
603.195 24” RCP Class III	Linear Foot

SPECIAL PROVISION
SECTION 606
GUARDRAIL

606.01 Description This work shall consist of furnishing and installing guardrail components in accordance with these specifications and in reasonably close conformity with the lines and grades shown on the plans or as established. The types of guardrail are designated as follows:

Type 3-Galvanized steel "w" beam, wood posts or galvanized steel posts.
Type 3a-Galvanized steel "w" beam, wood posts, wood or composite offset blocks.
Type 3aa-Corrosion resistant steel "w" beam, wood posts, wood or composite offset blocks.
Type 3b-Galvanized steel "w" beam, galvanized steel posts, galvanized steel offset blocks.
Type 3c-Galvanized steel "w" beam, wood posts or galvanized steel posts, wood or composite offset blocks.
Type 3d-Galvanized steel "w" beam, galvanized steel posts, wood or composite offset blocks.
Thrie Beam-Galvanized steel thrie beam, wood posts or galvanized steel posts, wood or composite offset blocks.

Median barriers shall consist of two beams of the above types, mounted on single posts. Except for thrie beam, median barriers may include rub rails when called for.

Bridge mounted guardrail shall consist of furnishing all labor, materials, and equipment necessary to install guardrail as shown on the plans. This work shall also include drilling for and installation of offset blocks if specified, and incidental hardware necessary for satisfactory completion of the work.

Remove and Reset and Remove, Modify, and Reset guardrail shall consist of removing the existing designated guardrail and resetting in a new location as shown on the plans or directed by the Resident. Remove, Modify, and Reset guardrail and Modify guardrail include the following guardrail modifications: Removing plate washers at all posts, except at anchorage assemblies as noted on the Standard Details, Adding offset blocks, and other modifications as listed in the Construction Notes or General Notes. Modifications shall conform to the guardrail Standard Details.

Bridge Connection shall consist of the installation and attachment of beam guardrail to the existing bridge. This work shall consist of constructing a concrete end post or modifying an existing endpost as required, furnishing, and installing a terminal connector, necessary hardware, and incidentals required to complete the work as shown on the plans. Bridge Transition shall consist of a bridge connection and furnishing and installing guardrail components as shown in the Standard Details.

606.02 Materials Materials shall meet the requirements specified in the following Sections of Division 700 - Materials:

Timber Preservative	708.05
Metal Beam Rail	710.04
Guardrail Posts	710.07
Guardrail Hardware	710.08

Guardrail components shall meet the applicable standards of "A Guide to Standardized Highway Barrier Hardware" prepared and approved by the AASHTO-AGC-ARTBA Joint Cooperative Committee, Task Force 13 Report.

Posts for underdrain delineators shall be “U” channel steel, 2.44m [8 ft] long, 3.72 kg/m [2 ½ lb/ft] minimum and have 9.5 mm [3/8 in] round holes, 25 mm [1 in] center to center for a minimum distance of 610 mm [2 ft] from the top of the post.

Reflectorized Flexible Guardrail Markers shall be mounted on all guardrails. A marker shall be mounted onto guardrail posts at the flared end treatment’s terminal and its tangent point, both at the leading and trailing ends of each run of guardrail. The marker’s flexible posts shall be grey with either silver-white or yellow reflectors (to match the edge line striping) at the tangents, red at leading ends, and green at trailing ends. Whenever the end treatment is not flared, markers will only be required at the end treatment’s terminal. These shall be red or green as appropriate. Markers shall be installed on the protected side of guardrail posts unless otherwise approved by the Resident. Reflectorized flexible guardrail markers shall be from the Maine DOT’s Approved Product List of Guardrail Material. The marker shall be grey, flexible, durable, and of a non-discoloring material to which 75 mm [3 in] by 225 mm [9 in] reflectors shall be applied, and capable of recovering from repeated impacts. Reflective material shall meet the requirements of Section 719.01 for ASTM D 4956 Type III reflective sheeting. The marker shall be secured to the guardrail post with two fasteners, as shown in the Standard Details.

Reflectorized beam guardrail (“butterfly”-type) delineators shall be mounted on all “w”-beam guardrail. The delineators shall be mounted within the guardrail beam at guardrail posts. Delineators shall be fabricated from high-impact, ultraviolet & weather resistant thermoplastic. Reflectorized beam guardrail delineators shall be placed at approximately 20 m [62.5 ft] intervals or every tenth post on tangents and at approximately 10 m [31.25 ft] intervals or every fifth post on curves. Exact locations of the delineators shall be as directed by the Resident. On divided highways, the left hand delineators shall be yellow and the right hand delineators shall be silver/white. On two directional highways, the right hand side shall be silver/white and no reflectorized delineator used on the left. All reflectors shall have reflective sheeting applied to only one side of the delineator facing the direction of traffic as shown in the Standard Detail 606(07). Reflectorized sheeting for guardrail delineators shall meet the requirements of Section 719.01.

Single wood post shall be of cedar, white oak, or tamarack, well seasoned, straight, and sound and have been cut from live trees. The outer and inner bark shall be removed and all knots trimmed flush with the surface of the post. Posts shall be uniform taper and free of kinks and bends.

Single steel post shall conform to the requirements of Section 710.07 b.

Single steel pipe post shall be galvanized, seamless steel pipe conforming to the requirements of ASTM A120, Schedule No. 40, Standard Weight.

Acceptable multiple mailbox assemblies shall be listed on the Department’s Approved Products List and shall be NCHRP 350 tested and approved.

The Guardrail 350 Flared Terminal shall be a terminal with a 1.2 m [4 ft] offset as shown in the Manufacturer's installation instructions.

Existing materials damaged or lost during adjusting, removing and resetting, or removing, modifying, and resetting, shall be replaced by the Contractor without additional compensation. Existing guardrail posts and guardrail beams found to be unfit for reuse shall be replaced when directed by the Resident.

606.03 Posts Posts for guardrail shall be set plumb in holes or they may be driven if suitable driving equipment is used to prevent battering and distorting the post. When posts are driven through pavement, the damaged area around the post shall be repaired with approved bituminous patching. Damage to lighting and signal conduit and conductors shall be repaired by the Contractor.

When set in holes, posts shall be on a stable foundation and the space around the posts, backfilled in layers with suitable material, thoroughly tamped.

The reflectorized flexible guardrail markers shall be set plumb with the reflective surface facing the oncoming traffic. Markers shall be installed on the protected side of guardrail posts. Markers, which become bent or otherwise damaged, shall be removed and replaced with new markers.

Single wood posts shall be set plumb in holes and backfilled in layers with suitable material, thoroughly tamped. The Resident will designate the elevation and shape of the top. The posts, that are not pressure treated, shall be painted two coats of good quality oil base exterior house paint.

Single steel posts shall be set plumb in holes as specified for single wood posts or they may be driven if suitable driving equipment is used to prevent battering and distorting the post.

Additional bolt holes required in existing posts shall be drilled or punched, but the size of the holes shall not exceed the dimensions given in the Standard Details. Metal around the holes shall be thoroughly cleaned and painted with two coats of approved aluminum rust resistant paint. Holes shall not be burned.

606.04 Rails Brackets and fittings shall be placed and fastened as shown on the plans. Rail beams shall be erected and aligned to provide a smooth, continuous barrier. Beams shall be lapped with the exposed end away from approaching traffic.

End assemblies shall be installed as shown on the plans and shall be securely attached to the rail section and end post.

All bolts shall be of sufficient length to extend beyond the nuts but not more than 13 mm [½ in]. Nuts shall be drawn tight.

Additional bolt holes required in existing beams shall be drilled or punched, but the size of the holes shall not exceed the dimensions given in the Standard Details. Metal around the holes shall be thoroughly cleaned and painted with two coats of approved aluminum rust resistant paint. Holes shall not be burned.

606.045 Offset Blocks The same offset block material is to be provided for the entire project unless otherwise specified.

606.05 Shoulder Widening At designated locations the existing shoulder of the roadway shall be widened as shown on the plans. All grading, paving, seeding, and other necessary work shall be in accordance with the Specifications for the type work being done.

606.06 Mail Box Post Single wood post shall be installed at the designated location for the support of the mailbox. The multiple mailbox assemblies shall be installed at the designated location in accordance with the Standard Details and as recommended by the Manufacturer. Attachment of the mailbox to the post will be the responsibility of the home or business owner.

606.07 Abraded Surfaces All galvanized surfaces of new guardrail and posts, which have been abraded so that the base metal is exposed, and the threaded portions of all fittings and fasteners and cut ends of bolts shall be cleaned and painted with two coats of approved rust resistant paint.

606.08 Method of Measurement Guardrail will be measured by the meter [linear foot] from center to center of end posts along the gradient of the rail except where end connections are made to masonry or steel structures, in which case measurement will be as shown on the plans.

Terminal section, low volume end, NCHRP 350 end treatments, reflectorized flexible guardrail marker, terminal end, bridge transition, bridge connection, multiple mailbox post, and single post will be measured by each unit of the kind specified and installed.

Widened shoulder will be measured as a unit of grading within the limits shown on the plans.

Excavation in solid rock for placement of posts will be measured by the cubic meter [cubic yard] determined from the actual depth of the hole and a hypothetical circle diameter of 600 mm [2 ft].

606.09 Basis of Payment The accepted quantities of guardrail will be paid for at the contract unit price per meter [linear foot] for the type specified, complete in place. Reflectorized beam guardrail (“butterfly”-type) delineators will not be paid for directly, but will be considered incidental to guardrail items. Terminal section, buffer end, NCHRP 350 end treatment, bridge connection, single post and reflectorized flexible guardrail markers will be paid for at the contract unit price each for the kind specified complete in place.

NCHRP 350 end treatments and low volume guardrail ends will be paid for at the contract price each, complete in place which price shall be full payment for furnishing and installing all components including the terminal section, posts, offset blocks, "w" beam, cable foundation posts, plates and for all incidentals necessary to complete the installation within the limits as shown on the Standard Details or the Manufacturer’s installation instructions. Each end treatment will be clearly marked with the manufacturers name and model number to facilitate any future needed repair. Such payment shall also be full compensation for furnishing all material, excavating, backfilling holes, assembling, and all incidentals necessary to complete the work, except that for excavation for posts or anchorages in solid ledge rock, payment will be made under Pay Item 206.07. Type III Retroreflective Adhesive Sheeting

shall be applied to the approach buffer end sections and sized to substantially cover the end section. On all roadways, the ends shall be marked with alternating black and retroreflective yellow stripes. The stripes shall be 75 mm [3 in] wide and sloped down at an angle of 45 degrees toward the side on which traffic is to pass the end section. Guardrail 350 flared terminal shall also include a set of installation drawings supplied to the Resident.

Anchorages to bridge end posts will be part of the bridge work. Connections thereto will be considered included in the unit bid price for guardrail.

Guardrail to be placed on a radius of curvature of 45 m [150 ft] or less will be paid for under the designated radius pay item for the type guardrail being placed.

Widened shoulder will be paid for at the contract unit price each complete in place and will be full compensation for furnishing and placing, grading and compaction of aggregate subbase and any required fill material.

Adjust guardrail will be paid for at the contract unit price per meter and will be full compensation for adjusting to grade. Payment shall also include adjusting terminal end treatments where required.

Modify guardrail will be paid for at the contract unit price per meter and will be full compensation for furnishing and installing offset blocks, additional posts, and other specified modifications; removing, modifying, installing, and adjusting to grade existing posts and beams; removing plate washers and backup plates, and all incidentals necessary to complete the work. Payment shall also include removing and resetting terminal ends where required.

Remove and Reset guardrail will be paid for at the contract unit price per meter and will be full compensation for removing, transporting, storing, reassembling all parts, necessary cutting, furnishing new parts when necessary, reinstalling at the new location, and all other incidentals necessary to complete the work. Payment shall also include removing and resetting terminal ends when required. No payment will be made for guardrail removed, but not reset and all costs for such removal shall be considered incidental to the various contract pay items.

Remove, Modify, and Reset guardrail will be paid for at the contract unit price per meter and will be full compensation for the requirements listed in Modify guardrail and Remove and Reset guardrail.

Bridge Connections will be paid for at the contract unit price each. Payment shall include, attaching the connection to the endpost including furnishing and placing concrete and reinforcing steel necessary to construct new endposts if required, furnishing and installing the terminal connector, and all miscellaneous hardware, labor, equipment, and incidentals necessary to complete the work.

Bridge Transitions will be paid for at the contract unit price each. Payment shall include furnishing and installing the thrie beam or “w”-beam terminal connector, doubled beam section, and transition section, where called for, posts, hardware, precast concrete transition curb, and any other necessary materials and labor, including the bridge connection as stated in the previous paragraph.

Payment will be made under:

	Pay Item	Pay Unit
606.15	Guardrail Type 3a-Single Rail	meter [Linear Foot]
606.151	Guardrail Type 3aa-Single Rail	meter [Linear Foot]
606.17	Guardrail Type 3b-Single Rail	meter [Linear Foot]
606.1721	Bridge Transition - Type I	Each
606.1722	Bridge Transition - Type II	Each
606.1731	Bridge Connection - Type I	Each
606.1732	Bridge Connection - Type II	Each
606.178	Guardrail Beam	meter [Linear foot]
606.18	Guardrail Type 3b - Double Rail	meter [Linear foot]
606.19	Guardrail Type 3a - 4.5 m [15 ft] radius and less	meter [Linear Foot]
606.191	Guardrail Type 3aa - 4.5 m [15 ft] radius and less	meter [Linear Foot]
606.20	Guardrail Type 3a - over 4.5 m [15 ft] radius	meter [Linear Foot]
606.201	Guardrail Type 3aa - over 4.5 m [15 ft] radius	meter [Linear Foot]
606.21	Guardrail Type 3b - 4.5 m [15 ft] radius and less	meter [Linear Foot]
606.22	Guardrail Type 3b - over 4.5 m [15 ft] radius	meter [Linear Foot]
606.23	Guardrail Type 3c - Single Rail	meter [Linear Foot]
606.2301	Guardrail Type 3c - Double Rail	meter [Linear Foot]
606.231	Guardrail Type 3c - 4.5 m [15 ft] radius and less	meter [Linear Foot]
606.232	Guardrail Type 3c - over 4.5 m [15 ft] radius	meter [Linear Foot]
606.24	Guardrail Type 3d - Single Rail	meter [Linear Foot]
606.2401	Guardrail Type 3d - Double Rail	meter [Linear Foot]
606.241	Guardrail Type 3d - 4.5 m [15 ft] radius and less	meter [Linear Foot]
606.242	Guardrail Type 3d - over 4.5 m [15 feet] radius	meter [Linear Foot]
606.25	Terminal Connector	Each
606.257	Terminal Connector - Thrie Beam	Each
606.265	Terminal End-Single Rail - Galvanized Steel	Each
606.266	Terminal End-Single Rail - Corrosion Resistant Steel	Each
606.275	Terminal End-Double Rail - Galvanized Steel	Each
606.276	Terminal End-Double Rail - Corrosion Resistant Steel	Each
606.353	Reflectorized Flexible Guardrail Marker	Each
606.354	Remove and Reset Reflectorized Flexible Guardrail Marker	Each
606.356	Underdrain Delineator Post	Each
606.358	Guardrail, Modify, Type 3b to 3c	meter [Linear Foot]
606.3581	Guardrail, Modify Existing to Type 3d	meter [Linear Foot]
606.362	Guardrail, Adjust	meter [Linear Foot]
606.365	Guardrail, Remove, Modify, and Reset, Type 3b to 3c	meter [Linear Foot]
606.3651	Guardrail, Remove, Modify, and Reset Existing to Type 3d	meter [Linear Foot]
606.366	Guardrail, Removed and Reset, Type 3c	meter [Linear Foot]
606.367	Replace Unusable Existing Guardrail Posts	Each
606.47	Single Wood Post	Each
606.48	Single Galvanized Steel Post	Each
606.50	Single Steel Pipe Post	Each

606.51	Multiple Mailbox Support	Each
606.55	Guardrail Type 3 - Single Rail	meter [Linear Foot]
606.551	Guardrail Type 3 - Single Rail with Rub Rail	meter [Linear Foot]
606.56	Guardrail Type 3 - Double Rail	meter [Linear Foot]
606.561	Guardrail Type 3 - Double Rail with Rub Rail	meter [Linear Foot]
606.568	Guardrail, Modify Type 3c -Double Rail	meter [Linear Foot]
606.59	Guardrail Type 3 - 4.5 m [15 ft] radius and less	meter [Linear Foot]
606.60	Guardrail Type 3 - over 4.5 m [15 ft] radius	meter [Linear Foot]
606.63	Thrie Beam Rail Beam	meter [Linear Foot]
606.64	Guardrail Thrie Beam - Double Rail	meter [Linear Foot]
606.65	Guardrail Thrie Beam - Single Rail	meter [Linear Foot]
606.66	Terminal End Thrie Beam	Each
606.70	Transition Section - Thrie Beam	Each
606.71	Guardrail Thrie Beam - 4.5 m [15 ft] radius and less	meter [Linear Foot]
606.72	Guardrail Thrie Beam - over 4.5 m [15 ft] radius	meter [Linear Foot]
606.73	Guardrail Thrie Beam - Single Rail Bridge Mounted	meter [Linear Foot]
606.74	Guardrail Type 3 - Single Rail Bridge Mounted	meter [Linear Foot]
606.753	Widen Shoulder for Low Volume Guardrail End - Type 3	Each
606.754	Widen Shoulder for Guardrail 350 Flared Terminal	Each
606.78	Low Volume Guardrail End - Type 3	Each
606.79	Guardrail 350 Flared Terminal	Each

1. Reflectorized Flexible Guardrail Markers shall be from Maine DOT's Approved Product List of Guardrail Material.

2. Installation:
   a. Each bolt-hole diameter shall be the bolt diameter + 1/16".
   b. Wood post attachment - attach marker with 2, 5/16" diameter zinc-coated lag bolts, having 2" of embedment into wood post.
   c. Steel post attachment - attach marker with 2, 1/4" diameter zinc-coated bolt, washer and nut assemblies, having 1/2" of bolt extension behind steel post.
   d. When provided by the marker manufacturer, a stiffening pipe shall be inserted into the base of the marker prior to drilling bolt holes and shall remain in-place.

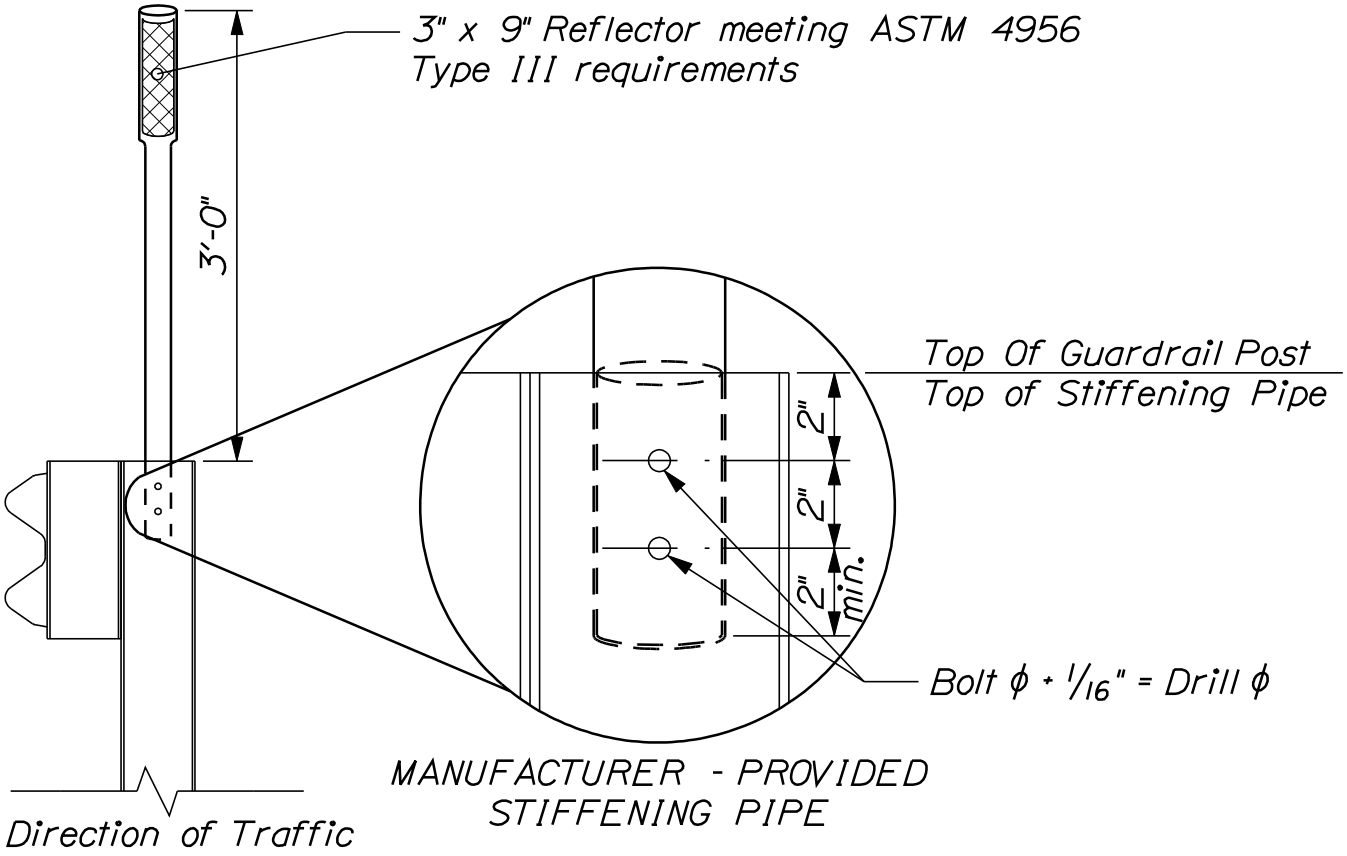

REFLECTORIZED FLEXIBLE GUARDRAIL MARKER DETAILS

606(34)

SPECIAL PROVISION
SECTION 606
GUARDRAIL
(Anchorage Assembly)

Description This work shall consist of furnishing and installing anchorage assemblies in accordance with current Standard Specifications and as shown in the attached details at the locations indicated on the plans.

Materials Materials shall meet the requirements specified in the following subsections of Division 700 - Materials:

Timber Preservative 708.05
Metal Beam Rail 710.04
Timber Posts 710.07
Guardrail Hardware 710.08

CONSTRUCTION REQUIREMENTS

Method of Measurement Anchorage assemblies will be measured by the unit (each) complete in place and will include one 3.81 m (12.5 ft) beam and all components shown on the attached details.

Basis of Payment The accepted quantity of anchorage assemblies will be paid for at the contract unit price per each, complete in place and will include one 3.81 m (12.5 ft) beam and all components shown on the attached details. Payment shall be full compensation for furnishing and installing all components as shown on the attached details and for incidentals necessary to complete the work.

Payment will be made under:

Pay Item		Pay Unit
606.259	Anchorage Assembly	Each

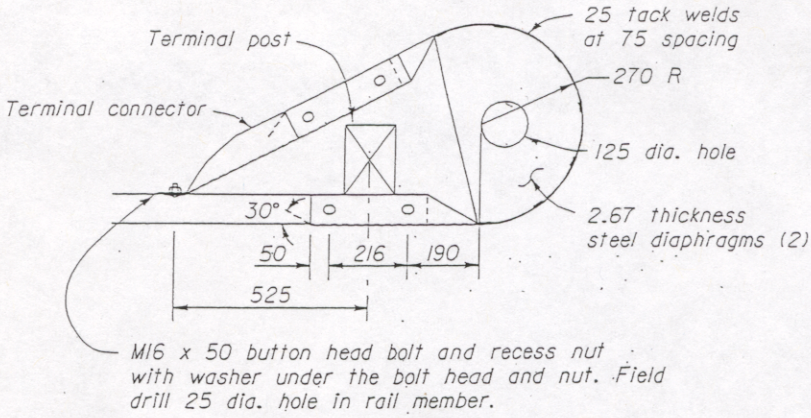

PLAN

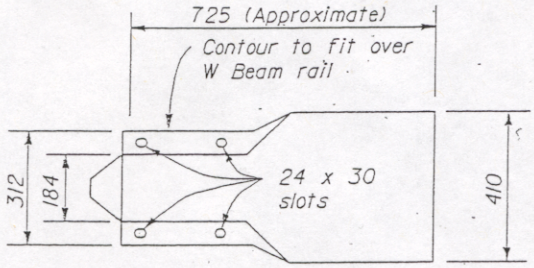

ELEVATION

TYPE I END SECTION ASSEMBLY

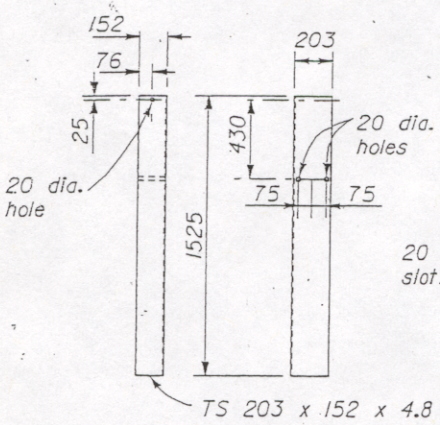

STEEL TUBE ANCHOR

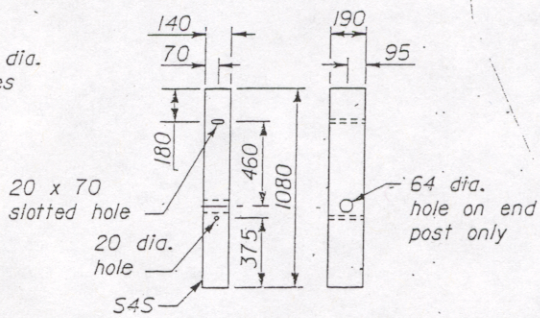

TERMINAL POST

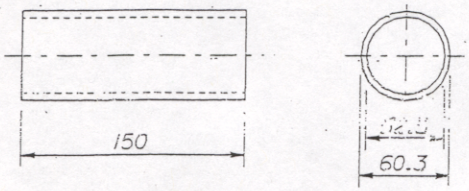

GALVANIZED STANDARD PIPE POST SLEEVE

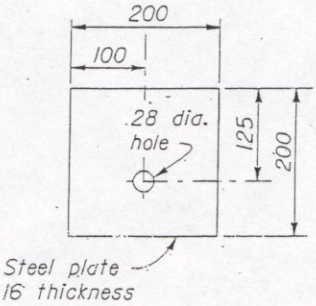

BEARING PLATE

Anchorage Assembly

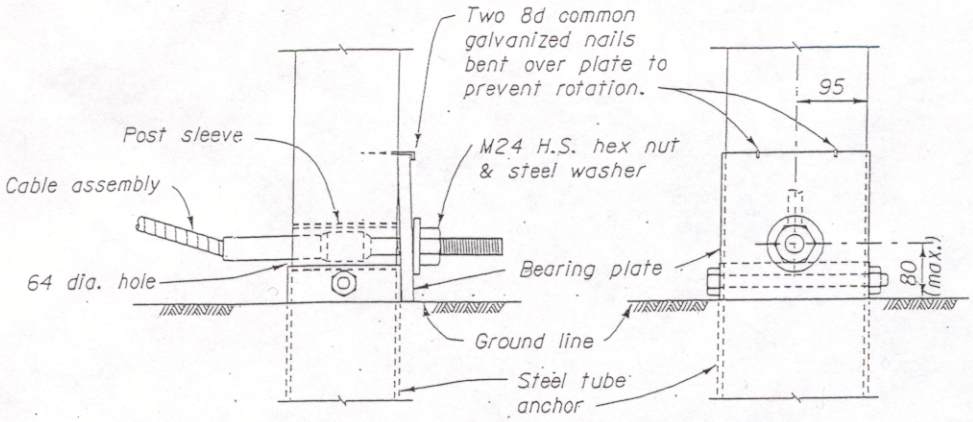

DETAIL A

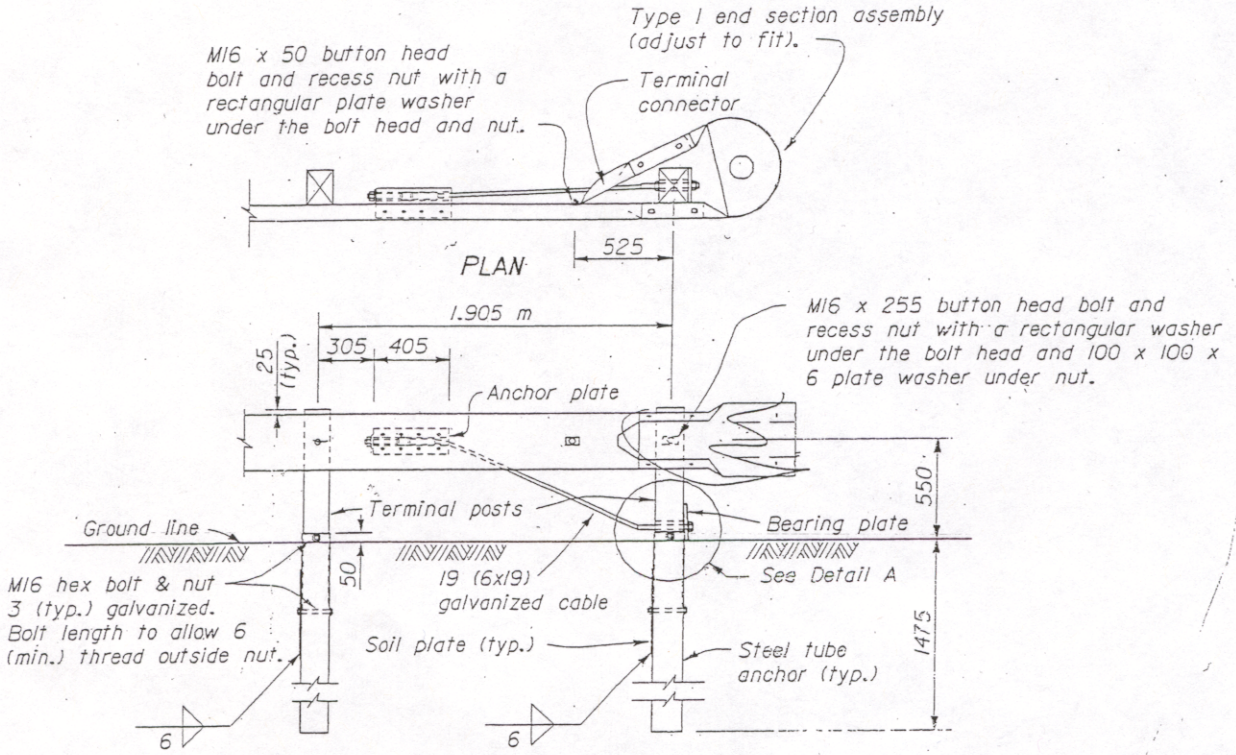

PLAN

ELEVATION

ANCHORAGE ASSEMBLY

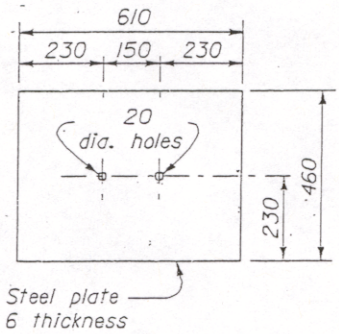

SOIL PLATE

(2 reqd.)

NOTES:

1. Unless otherwise shown, dimension are in millimeters.
2. Dimensional tolerances not shown or implied are intended to be those consistent with the proper functioning of the part, including its appearance, and accepted manufacturing practices.
3. Furnish hardware in metric sizes shown. Equivalent imperial sizes may be used when metric sizes are not available.

Anchorage Assembly

SPECIAL PROVISION
SECTION 606

BURIED-IN-SLOPE GUARDRAIL END

DESCRIPTION

The work shall consist of furnishing and installing a buried-in-slope guardrail end or attaching the guardrail end to ledge. Work shall be done in accordance with this special provision and in conformance with the lines, grades and details shown on the plans. The work shall also include any excavation or backfill necessary for proper installation.

MATERIALS

Guardrail Components. The guardrail components shall meet the requirements of Standard Specification 606 – Guardrail.

CONSTRUCTION REQUIREMENTS

Guardrail shall be attached to ledge or buried-in-slope based on field conditions as determined by the Resident.

Buried-in-slope guardrail end shall be constructed in accordance with the guardrail special details in the plans and Specification 606 – Guardrail with the following additions:

- Height of guardrail shall be tapered down in elevation to maintain 44 inch maximum height.
- All posts shall be 8ft. in length from where the guardrail flares away from the road back to the anchor posts. Posts for the post anchor shall by 6ft. long.
- The post anchor shall be used. The Contractor shall inform the Engineer if an anchor alternative is proposed to be used. The Contractor shall receive approval from the Resident, for any alternative anchor prior to placement of guardrail.
- A minimum of 1ft. cover shall be placed over the post anchor. All backfilled material shall be compacted.

METHOD OF MEASUREMENT

Guardrail end attached to ledge or Buried-in-slope guardrail end shall be measured for payment by each unit complete in place. Buried-in-slope guardrail end shall include but not be limited to the following guardrail components:

Component	***Item Number***	***Quantity***
Steel Post	PWE01-8ft. long	10
Steel Post Anchor	PWE01- 6ft. long	3
Offset Block	PDB01- modified	10
Galvanized Steel Plate	See attached drawings	13
"W" Beam Section	RWM04a	66.6 ft.
Rub Rail	RWM02	53.8 ft.

BASIS OF PAYMENT

The accepted quantity for either buried-in-slope guardrail end or guardrail end attached to ledge shall be paid for at the contract unit price per each, complete in place. Such payment shall be full compensation for furnishing all material to assemble and all incidentals and labor necessary to complete the work. All excavation, backfill grading and compaction required to complete the installation shall be included in the unit bid price for the item.

Payment will be made under:

Pay Item	Pay Unit
606.80 Buried-in-slope guardrail end	Each

SPECIAL PROVISION
SECTION 608

DETECTABLE WARNINGS

Description: This work shall consist of furnishing and installing curb ramp detectable warning plates with truncated domes at the locations shown on the plans or as established by the Resident.

MATERIALS

Detectable Warnings: The Contractor shall provide new cast iron detectable warning plates as manufactured by one of the manufacturers listed on Maine DOT's Qualified Products list of Cast Iron Detectable Warning Plates. This list can be found at:

http://www.maine.gov/mdot/transportation-research/qpl.php

Each field shall match the width of the ramp and shall have a natural finish.

Prior to starting this work, the Contractor shall submit for approval the name of the selected supplier, manufacturer's literature describing the product, installation procedures, and routine maintenance required.

Concrete: Portland cement concrete shall meet the requirements of Section 502, Structural Concrete, Class A

CONSTRUCTION REQUIREMENTS

Existing Concrete Curb Ramps:

Existing Concrete shall be saw-cut to a dimension 100mm (4 inches) larger than the detectable warning plates. New concrete shall be placed in the resulting opening and finished, and the new plates set into the wet concrete, according to manufacturer recommendations. New plates shall be set square with the curb edge and the base of the truncated domes shall be flush with adjacent surfaces to allow proper drainage.

New Concrete Curb Ramps:

New concrete shall be placed and finished for the ramp, and the new plates set into the wet concrete, according to manufacturer recommendations. New plates shall be set square with the curb edge and the base of the truncated domes shall be flush with adjacent surfaces to allow proper drainage

New Asphalt Ramps:

Asphalt shall be saw cut and removed to provide an opening that will allow for the dimensions of the cast iron plate surrounded by an additional 4" border on all sides of the plate. New concrete shall be placed in the resulting opening and finished, and the new plates set into the wet concrete, according to manufacturer recommendations. New plates shall be set square with the curb edge and the base of the truncated domes shall be flush with adjacent surfaces to allow proper drainage.

METHOD OF MEASUREMENT

Detectable warning fields properly placed and accepted shall be measured for payment by the square foot. Measurement shall include actual plate area, not surrounding concrete.

Basis of Payment:

Payment will be full compensation at the contract unit price for all labor, materials, and equipment required to install the detectable warning fields. This shall include surface preparation and removal of concrete or asphalt, and necessary replacement concrete. On new concrete ramps, concrete shall be paid for under separate items

Pay Item		Pay Unit
608.26	Curb Ramp Detectable Warning Field	SQUARE METER (SQUARE FEET)

VIEWS AND DETAILS OF THE DETECTABLE WARNING

(NOT TO SCALE)

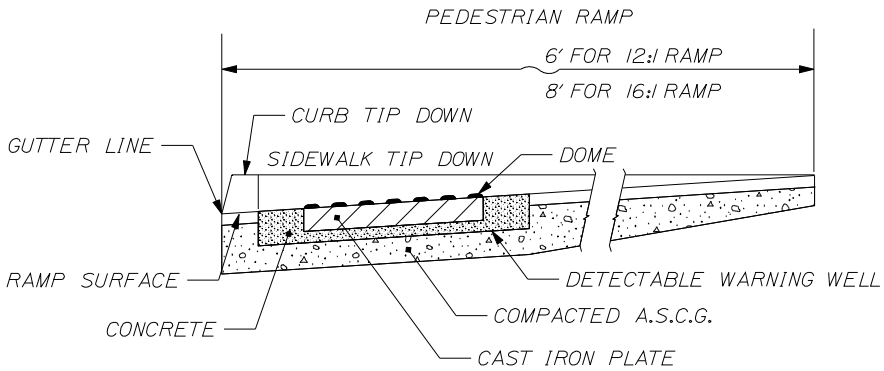

SIDE SECTION VIEW OF
DETECTABLE WARNING, WELL, CURB AND GUTTER

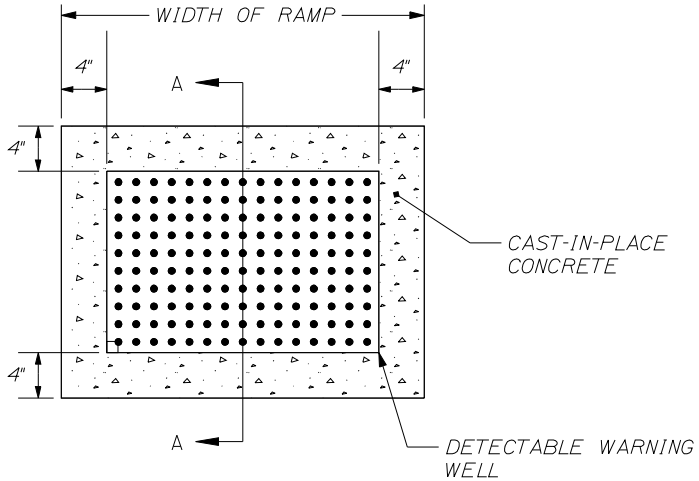

PLAN VIEW OF
DETECTABLE WARNING AND WELL

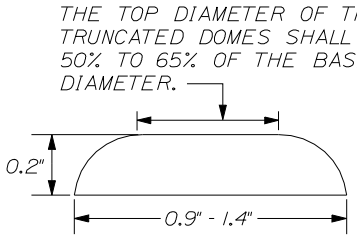

ELEVATION VIEW

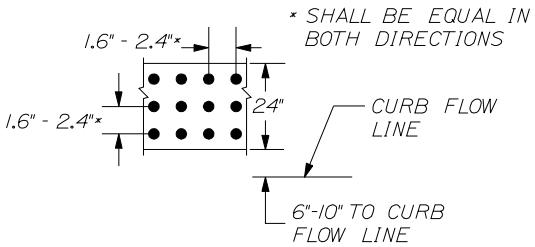

PLAN VIEW

DOME AND DETECTABLE WARNING DETAILS

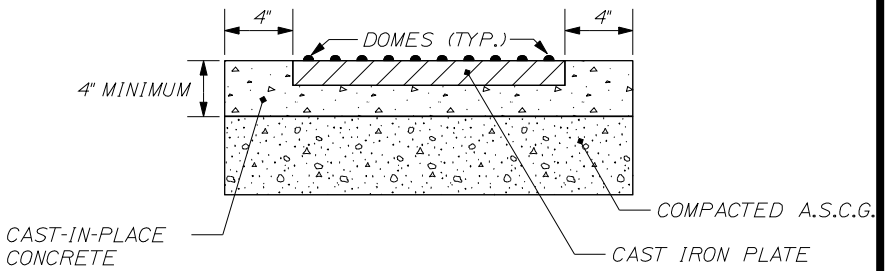

SECTION A-A

NOTE: ALL DETECTABLE WARNING AREAS SHALL START 6-10" FROM THE FLOW LINE OF THE CURB, BE 24" IN DEPTH, AND COVER THE COMPLETE WIDTH OF THE RAMP AREA ONLY.

STATE OF MAINE
DEPARTMENT OF TRANSPORTATION

CURB RAMP

VIEWS AND DETAILS OF THE DETECTABLE WARNING

DETAILS

SHEET NUMBER

1/96

SPECIAL PROVISIONS
SECTION 621
LANDSCAPE
(Plant Species Specification and Quantities List)

- The following list of items provides the estimated quantities for use on this project.

- The scientific name of the plant material is provided along with the common name in parenthesis.

- The contractor shall follow MaineDOT Standard Specifications for landscape materials and installation procedures (Section 621).

- The MaineDOT Landscape Architect will be available to inspect plant materials and stake the location of landscape items prior to the time of planting. Plants shall not be installed prior to layout and approval by the MaineDOT Landscape Architect or their designee.

- The majority of landscape items will be located around drainage structures between Sta.58+00 and Sta.68+00 left and right.

- Landscape Items, 621.389 and 621.54 shall be planted in bark mulch beds.
  Items 621.389 and 621.54 shall be planted 2.5' o.c.
  Item 621.710 shall be planted 2' o.c.

- Items, 621.037, 621.038 621.186, 621.267, 621.552, 621.558 may be used anywhere on the project in locations to be determined by the MaineDOT Landscape Architect or their designee.

- A Two-year establishment period is incidental to this planting.

- No Maintenance Bond is required.

ITEM NO	Description	Unit	Quantity	Total
621.037	**Evergreen Trees 5' – 6' Group A, B&B**			3
	Pinus strobus (White Pine)	Ea.	3	
621.038	**Evergreen Trees 5' – 6' Group B, B&B**			3
	Picea glauca (White Spruce)	Ea.	3	
621.186	**Med. Deciduous Trees 8 – 10' Group C, B&B or Cont., multi-stem**			3
	Betula nigra 'Heritage' (Heritage River Birch)	Ea.	3	
621.246	**Lg Deciduous Trees 3-4' Group A, Cont.**			8
	Acer rubrum (Red Maple)	Ea.	8	

621.267	**Lg Deciduous Trees 1.75–2 ”cal. Group A, B&B**			3
	Acer rubrum (Red Maple)	Ea.	3	
621.389	**Dwarf Evergreens 15 - 18” Group A, Cont.**			30
	Juniperus c. ‘Mint Julep’ (Mint Julep Juniper)	Ea.	30	
621.54	**Deciduous Shrubs 18 – 24” Group A, Cont.**			60
	Rhus aromatica ‘Gro-Low’ (Gro Low Sumac)	Ea.	60	
621.546	**Deciduous Shrubs 2 – 3’ Group A, Cont.**			60
	Amelanchier canadensis (Shadblow)	Ea.	15	
	Aronia melanocarpa (Black Chokeberry)	Ea.	10	
	Cornus racemosa (Gray Dogwood)	Ea.	10	
	Viburnum lentago (Nannyberry)	Ea.	20	
	Prunus virginiana (Chokecherry)	Ea.	5	
621.552	**Deciduous Shrubs 3 – 4’ Group A, Cont.**			6
	Hydrangea pan. ‘Grandiflora’(Pee Gee Hydrangea)	Ea.	3	
	Forsythia x inter. ‘Meadowlark’ (Forsythia)	Ea.	3	
621.558	**Deciduous Shrubs 4 – 5’ Group A, B&B or Cont.**			12
	Amelanchier X Grandiflora (Serviceberry)	Ea.	9	
	Syringa vulgaris (Common Purple Lilac)	Ea.	3	
621.710	**Herbaceous Perennials Group A, 1 gal.**			60
	Baptisia australis (Baptisia)	Ea	60	

SPECIAL PROVISION
SECTION 635
PREFABRICATED GRAVITY RETAINING WALL
(Prefabricated Concrete Block Gravity Wall)

Delete the entire Standard Specification Section 635 and replace with the following:

Description This work shall consist of construction of a prefabricated concrete block gravity wall with geogrid reinforcement in accordance with these specifications and in reasonably close conformance with the lines and grades shown on the plans, or established by the Resident. Blocks shall be made of wet cast concrete made from Portland cement, water, chemical admixtures, and aggregates.

Included in the scope of the prefabricated gravity wall construction are**:** all grading necessary for wall construction, construction of leveling pads beyond the limits of existing headwalls, compaction of the wall foundation soil, geogrid, backfill, and block wall installation. Construction of geotextile reinforced soil walls behind the existing headwalls will also be included in this item.

The prefabricated gravity wall design shall follow the general dimensions of the wall envelope shown in the contract plans. The top of the upper row of blocks shall be at or above the top of the face elevation shown on the plans. End blocks, cap blocks, or other concrete units necessary to give the wall a finished appearance shall be provided as part of the wall.

The Contractor shall require the supplier to provide a qualified experienced technical representative to advise the Contractor concerning proper installation procedures. The technical representative shall be on-site as needed and shall remain available for consultation as necessary for the Contractor or as required by the Resident. The work done by this representative is incidental to the construction of the wall.

MATERIALS

Materials Materials shall meet the requirements of the following sections of Division 700:

Coarse Aggregate for Concrete, Class A	703.02
Granular Borrow	703.19
Reinforcing Steel	709.01
Structural Precast Concrete Units	712.061

The Contractor is cautioned that all of the materials listed are not required for every prefabricated concrete block gravity wall. The Contractor shall furnish the Resident a Materials Certification Letter certifying that the applicable materials comply with this section of the specifications. Materials shall meet the following additional requirements:

Concrete Units The Materials Certification Letter described above shall contain the date of concrete casting, a lot identification number, compressive strength results, and entrained air

results. All prefabricated concrete units shall conform to the requirements of 712.061 with the following exceptions:

A. Materials – Materials are modified as follows: the maximum water cement ratio shall be 0.42, use of calcium nitrite is not required, the minimum 28 day compressive strength shall be 31700 kPa (4600 psi).

B. Quality Control and Quality Assurance Quality Control and Quality Assurance is modified as follows: delete the second and third paragraphs.

C. Construction - Construction requirements are modified as follows:

Delete the second paragraph and replace it with the following:
All units for a designated wall system, including end blocks, steps, caps and other wall units shall be manufactured from the same material sources of aggregates, brand and type of cement and color pigment.

Replace the first sentence in the paragraph which begins "The forms shall remain …" with the following:
The forms shall remain in place until the concrete has gained sufficient strength such that removal of the forms and subsequent handling will not damage the units.

Replace the paragraph which begins "A minimum of 8 …." With the following:
The Contractor shall make and test at least one set of cylinders for every 38 m^3 [50 yd^3] of production concrete used to cast the concrete units.

Replace the paragraph which begins "At least once …" with the following:
The Contractor shall make four cylinders for use by the Department for every 153 m^3 [200 yd^3].

Add the following paragraph at the end of the Construction section:
Face texture of the units shall be a formed finish on all exposed surfaces. Pigment shall be added during the casting process of the concrete unit to achieve a consistent shade of gray or other color as determined by the Resident.

D. Tolerances – Maximum dimensional deviation of formed dimensions shall not vary more than ½-inch or 2 percent of the unit dimension, whichever is less. Unit dimensions shall be:

Unit Depth – 21 inch, minimum
Unit Width - 46 inch, minimum at the face
Unit Height - 18 inch, minimum at the face for a standard block

Geogrid Reinforcement Geogrid Reinforcement shall have a minimum LTDS of 2500 lbs/ft, such as Mirafi 5XT or equal. Substitution of a geosynthetic other than required by the proprietary wall system manufacturer shall not be allowed unless approved by the Project Geotechnical Engineer after submittal of shop drawings and pullout and interface friction test data.

Certification The Contractor shall submit a manufacturer's certification that the geosynthetics supplied meet the respective index criteria set when the geosynthetic was approved, measured in full accordance with all test methods and standards specified, or referenced, in this specification.

The manufacturer's certificate shall state that the furnished geosynthetic meets the requirements of these specifications as evaluated by the manufacturer's quality control program. The values submitted shall be certified by a person having legal authority to bond the manufacturer. In case of dispute over validity of values, the Resident can require the Contractor to supply test data from an agency approved laboratory to support the values submitted, at the Contractor's cost.

Geogrid Connection Reinforcing bar used in the geosynthetic connection shall be ½-inch diameter epoxy coated reinforcing bar, coated on the ends and meeting the requirements of Section 503, Reinforcing Steel. Installation shall be in accordance with manufacturer's recommendations.

Backfill Material Backfill material placed behind the concrete units shall meet the requirements of Section 703.19 Granular Borrow, Material for Underwater Backfill. The maximum aggregate particle size is limited to ¾ in U.S Sieve Size. The contractor is required to submit a grain size distribution curve (ASTM D 422) and a moisture-density relationship curve (AASHTO T-180) for acceptance of the proposed backfill material and determination of the appropriate installation damage reduction factor (RF_{ID}). The backfill material shall be subjected to pH testing to determine the appropriate durability reduction factor (RF_D).

Material between blocks must be Granular Borrow, Material for Underwater Backfill or Underdrain Backfill Material meeting the requirements of Section 703.22, Type C.

SUBMITTALS

Materials Certification Letter The Contractor, or the supplier as his agent, shall furnish the Resident a Materials Certification Letter for the above materials, including the backfill material, in accordance with Section 700 of the Standard Specifications. Backfill material test results shall include grain size distribution curve, moisture-density relationship curve, and pH test results required for reinforced backfill only. A copy of all test results performed by the Contractor or his supplier necessary to assure contract compliance shall also be furnished to the Resident. The Resident will base acceptance upon the materials Certificate Letter, accompanying test reports, and visual inspection.

CONSTRUCTION REQUIREMENTS

Excavation. The excavation and use as fill disposal of all excavated material shall meet the requirements of Section 203 -- Excavation and Embankment, except as modified herein.

Foundation. The area upon which the geotextile reinforced soil wall and the prefabricated block gravity wall structures are to rest, within the limits shown on the submitted plans, shall be graded for a width equal to, or exceeding, the length of the blocks.

The geotextile reinforced soil walls behind the existing headwalls shall be constructed with geotextile extending to the offset shown on the Special Detail, compacted in lifts not to exceed 1.5 ft. Fill material shall meet the requirements of Standard Specification 703.19, Granular Borrow. Prior to wall and leveling pad construction, the foundation material shall be compacted to at least 95 percent of maximum laboratory dry density (AASHTO T-180 Method C or D). Frozen and unsuitable soil shall be removed and replaced with granular borrow compacted to 95 percent of AASHTO T-180.

The first row of blocks shall be placed on top of existing culvert headwalls at Stations 60+98.09 Lt, 66+48.15 Lt and 66+48.15 Rt. Blocks shall be centered, doweled and grouted in place as shown on the Wall Detail Sheet. Crushed stone meeting the requirements of Std Specification Item 703.02, Coarse Aggregate for Concrete Type A may be used as a leveling pad in areas beyond the existing headwalls. Unreinforced Fill Concrete meeting the requirements of section 502, Structural Concrete may be used for these leveling pads at the Contractor's option. Concrete for leveling pads shall be accepted under Method "C" requirements, and Contractor may begin placement of concrete block units after 12 hours at his own risk.

Method and Equipment. Prior to erection of the prefabricated concrete block wall, the Contractor shall furnish the Resident with detailed information concerning the proposed construction method and equipment to be used. The erection procedure shall be in accordance with the manufacturer's instructions. Any units that are damaged due to handling will be replaced at the Contractor's expense.

Installation of Wall Units. A field representative from the wall system being used shall be available, as needed, during the erection of the wall. The services of the representative shall be at no additional cost to the project. Horizontal joint fillers shall be installed as needed.

The maximum offset in any unit horizontal joint shall be 6.5 mm 1/4 inch. The prefabricated wall blocks shall be installed to a tolerance of plus or minus 3/4 inch in 10 feet in vertical alignment and horizontal alignment.

Backfill Placement. Backfill placement shall closely follow the erection of each row of prefabricated wall units. The Contractor shall decrease the lift thickness if necessary to obtain the specified density. The maximum lift thickness shall be 8 inch loose. Gravel borrow backfill shall be compacted in accordance with Section 203.12 except that the minimum required compaction shall be at least 92 percent of maximum density as determined by AASHTO T-180 Method C or D. Backfill compaction shall be accomplished without disturbance or displacement of the wall blocks. Sheepsfoot rollers will not be allowed. Whenever a compaction test fails, no additional backfill shall be placed over the area until the lift is recompacted and a passing test achieved.

The moisture content of the backfill material prior to and during compaction shall be uniform throughout each layer. Backfill material shall have a placement moisture content less than or equal to the optimum moisture content. Backfill material with a placement moisture content in excess of the optimum moisture content shall be removed and reworked until the moisture

content is uniform and acceptable throughout the entire lift. The optimum moisture content shall be determined in accordance with AASHTO T-180, Method C or D. At the end of the day's operations, the Contractor shall shape the last level of backfill so as to direct runoff of rain water away from the wall face.

Material between blocks must be Granular Borrow or Underdrain Backfill Material meeting the requirements of Section 703.22, Type C. If Granular Borrow, Material for Underwater Backfill is used between blocks, 722.02 drainage geotextile shall be placed behind vertical joints to prevent loss of granular material between blocks. Compliance with the gradation requirements shall be the responsibility of the Contractor, who shall furnish a copy of the backfill test results prior to construction. If Underdrain Backfill Material is used between blocks, no geotextile is required behind vertical joints.

Method of Measurement. Prefabricated Concrete Block Gravity Wall will be measured by the square foot of front surface not to exceed the dimensions shown on the contract plans unless authorized by the Resident. Vertical and horizontal dimensions will be from the edges of the blocks. No field measurements for computations will be made unless the Resident specifies, in writing, a change in the limits indicated on the plans. Geotextile reinforced soil walls will be measured by the square yard of geotextile used.

Basis of Payment. The accepted quantity of Prefabricated Concrete Block Gravity Wall will be paid for at the contract unit price per square foot complete in place. Payment shall be full compensation for furnishing all labor, equipment and materials including all precast concrete units, hardware, joint fillers, geogrid, steel connecting rods and pins, and technical field representative.

Excavation, foundation material and backfill material will all be incidental to both the Prefabricated Concrete Block Gravity Wall and the Geotextile reinforced soil wall.

There will be no allowance for excavating and backfilling for the Prefabricated Concrete Block Gravity Wall beyond the limits shown on the approved submitted plans, except for excavation required to remove unsuitable subsoil in preparation for the foundation. Payment for excavating unsuitable subsoil shall be full compensation for all costs of pumping, drainage, sheeting, bracing and incidentals for proper execution of the work, and will be paid as Common Excavation, Standard Specification 203.20.

Payment will be made under:

Pay Item	Pay Unit
635.31 Prefabricated Concrete Block Gravity Wall	Square Foot
620.54 Stabilization/Reinforcement Geotextile	Square Yard

SPECIAL PROVISION
SECTION 639
ENGINEERING FACILITIES
(Telephone)

639.09 Telephone

Paragraph 1 is amended as follows:

The contractor shall provide **two** telephone lines and two telephones,….

Add-

In addition the contractor will supply one computer broadband connection and modem lease. The type of connection supplied will be contingent upon the availability of services (i.e. DSL or Cable Broadband). It shall be the contractor's option to provide dynamic or static IP addresses through the service. **The selected service will have a minimum downstream connection of 1.5 Mbps and 384 Kbps upstream.** The contractor shall be responsible for the installation charges and all reinstallation charges following suspended periods. Monthly service and maintenance charges shall be billed by the Internet Service Provider (ISP) directly to the contractor.

SPECIAL PROVISION
SECTION 652
MAINTENANCE OF TRAFFIC

Approaches Approach signing shall include the following signs as a minimum. Field conditions may warrant the use of additional signs as determined by the Resident.

Road Work Next x Miles
Road Work 500 Feet
End Road Work

Work Area At each work site, signs and channelizing devices shall be used as directed by the Resident. Signs include:

Road Work xxxx[1]
One Lane Road Ahead
Flagger Sign

Other typical signs include:

Be Prepared to Stop
Low Shoulder
Bump
Pavement Ends

The above lists of Approach signs and Work Area signs are representative of the contract requirements. Other sign legends may be required.

The Contractor shall conduct their operations in such a manner that the roadway will not be restricted to one lane for more than 800 m [2,500 ft] at each work area. Where more than one work area restricts traffic to one lane operation, these work areas shall be separated by at least 1.6 km [1 mile] of two way operation.

Temporary Centerline A temporary centerline shall be placed each day on all new pavement to be used by traffic. The temporary centerline, when specified of reflectorized traffic paint, shall conform to the standard marking patterns used for permanent markings.

Failure to apply a temporary centerline daily will result in suspension of paving until temporary markers are applied to all previously placed pavement.

[1] "Road Work Ahead" to be used in mobile operations and "Road Work xx ft" to be used in stationary operations as directed by the Resident.

SPECIAL PROVISION
SECTION 652
MAINTENANCE OF TRAFFIC
(Traffic Control)

Failure by the contractor to follow the Contracts 652 Special Provisions and Standard Specification and/or The Manual on Uniform Traffic Control Devices (MUTCD) and/or The Contractors own Traffic Control Plan will result in a violation letter and result in a reduction in payment as shown in the schedule below. The Departments Resident or any other representative of The Department reserves the right to suspend the work at any time and request a meeting to discuss violations and remedies. The Department shall not be held responsible for any delay in the work due to any suspension under this item. Any reduction in payment under this Special Provision will be in addition to forfeiting payment of maintenance of traffic control devices for that day.

ORIGINAL CONTRACT AMOUNT

from	Up to and	Amount of Penalty
More Than	**Including**	**Damages per Violation**
$0	$100,000	$250
$100,000	$300,000	$500
$300,000	$500,000	$750
$500,000	$1,000,000	$1,500
$1,000,000	$2,000,000	$2,500
$2,000,000	$4,000,000	$5,000
$4,000,000	and more	$10,000

April 17, 2007
Supersedes May 10, 2006

SPECIAL PROVISION
SECTION 652
MAINTENANCE OF TRAFFIC
Construction Sign Sheeting Material

Super high intensity fluorescent retroreflective sheeting, ASTM D 4956 - Type VII, Type VIII, or Type IX (prismatic), is required for all construction signs.

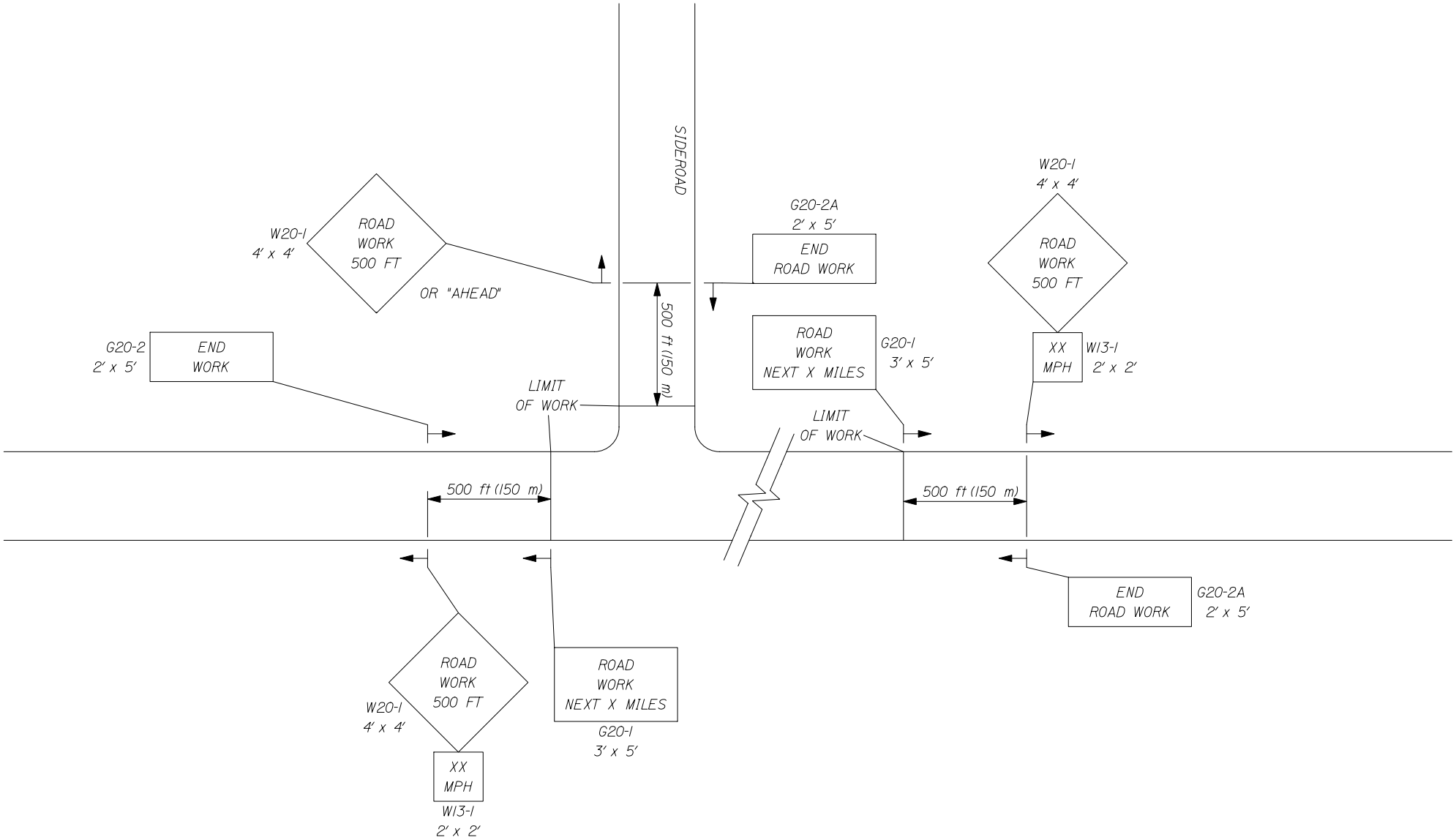

1 of 3

-- PROJECT APPROACH SIGNING --
TWO WAY TRAFFIC

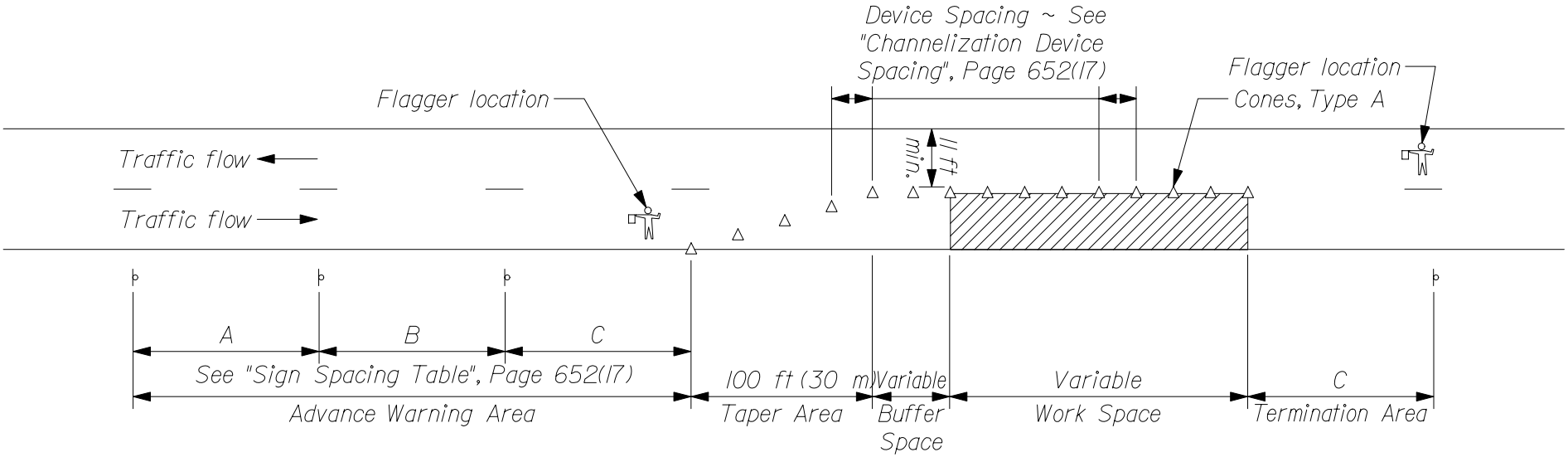

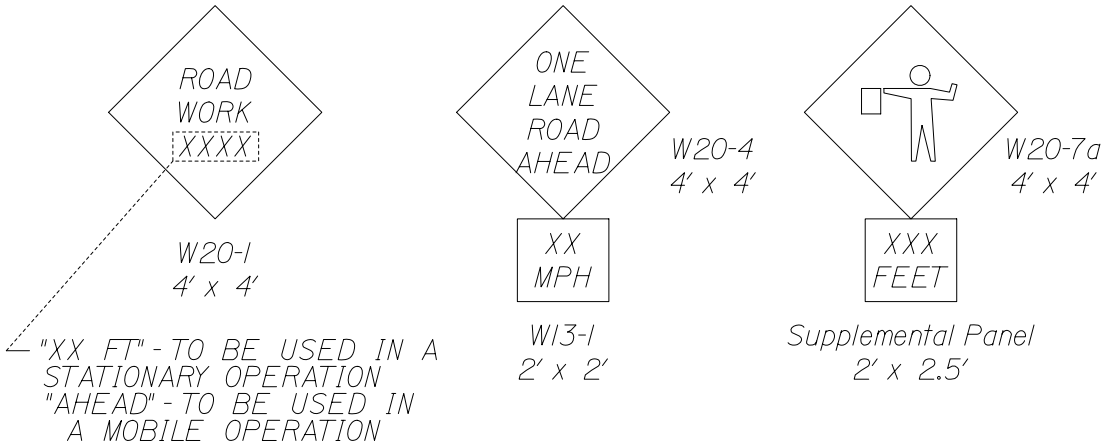

TYPICAL APPLICATION: TWO - WAY, TWO LANE ROADWAY, CLOSING ONE LANE USING FLAGGERS

TYPE OF TAPER	TAPER LENGTH (L)*
Merging Taper	at least L
Shifting Taper	at least 0.5L
Shoulder Taper	at least 0.33L
One-Lane, Two-Way Traffic Taper	100 ft (30 m) maximum
Downstream Taper	100 ft (30 m) per lane

* Formulas for L are as follows:

For speed limits of 40 mph (60 km/h) or less:

$L = \frac{WS^2}{60}$ $\quad (L = \frac{WS^2}{155})$

For speed limits of 45 mph (70 km/h) or greater:

$L = WS$ $\quad (L = \frac{WS}{1.6})$

* Formulas for L are as follows:

A minimum of 5 channelization devices shall be used in the taper.

CHANNELIZATION DEVICE SPACING

The spacing of channelization devices shall not exceed a distance equal to 1.0 times the speed limit in mph when used for taper channelization, and a distance in feet of 2.0 times the speed limit in mph when used for tangent channelization.

SIGN SPACING TABLE			
Road Type	Distance Between Signs**		
	A	B	C
Urban 30 mph (50 km/h) or less	100 (30)	100 (30)	100 (30)
Urban 35 mph (55 km/h) and greater	350 (100)	350 (100)	350 (100)
Rural	500 (150)	500 (150)	500 (150)
Expressway / Urban Parkway	2,640 (800)	1,500 (450)	1000 (300)

**Distances are shown in feet (meters).

GENERAL NOTES;

1. Final placement of signs and devices may be changed to fit field conditions as approved by the Resident.

SUGGESTED BUFFER ZONE LENGTHS

Speed (mph)	Length (feet)	Speed (mph)	Length (feet)
20	115	40	325
25	155	45	360
30	200	50	425
35	250	55	495

SPECIAL PROVISION
SECTION 656
Temporary Soil Erosion and Water Pollution Control

The following is added to Section 656 regarding Project Specific Information and Requirements.

Project Specific Information and Requirements

The following information and requirements apply specifically to this Project. The temporary soil erosion and water pollution control measures associated with this work shall be addressed in the SEWPCP.

1. This project is considered **SENSITIVE** in accordance with the BMP Manual. The Contractor's SEWPCP shall comply with Section II.B., Guidelines for Sensitive Waterbodies in the BMP Manual.
2. Newly disturbed earth shall be mulched by the end of each workday. Mulch shall be maintained on a daily basis.
3. The SEWPCP shall describe the location and method of temporary erosion and sediment control for existing and proposed catch basins, outlet areas and culvert inlets and outlets.
4. **If water is flowing within the drainage system, the water shall be diverted to a stable area or conduit and work shall be conducted in the dry.** The Contractor's plan shall address when and where the diversions will be necessary.
5. Dust control items other than those under *Standard Specification, Section 637 – Dust Control* , if applicable, shall be included in the plan.
6. Culvert inlet and outlet protection shall be installed within 48 hours of culvert installation, or prior to a storm event, whichever is sooner.
7. Temporary winter stabilization must be used between November 1 and April 1 or outside of said time period if the ground is frozen or snow covered. Temporary winter stabilization involves, at a minimum, covering all disturbed soils and seeded ground that is not Acceptable Work with an approved method. If temporary winter stabilization practices are used, spring procedures for permanent stabilization shall also be described in the SEWPCP. Use of these methods for over-winter temporary erosion control will be incidental to the contract and be paid for as part of Pay I All disturbed ditches shall be stabilized by the end of each workday. Stabilization shall be maintained on a daily basis.
8. Erosion control blanket shall be installed in the bottoms of all ditches except where a stone lining is planned. Seed shall be applied prior to the placement of the blanket.
9. If check dams are used, they shall be constructed of stone in accordance with BMP Manual, Section 9. *Hay Bale Temporary Check Dams* **are not allowed**. Delete all reference to them in Section 9 item 656.75.
10. **CLEARING LIMIT LINES SHALL BE MINIMIZED.** Clearing shall be minimized as shown on the design plans.

SPECIAL PROVISION
SECTION 801
SANITARY SEWER

Description This work shall consist of re-constructing a small section of sewer line. Drainage manhole # 2 has an existing 12 in [PVC] gravity sewer running through the manhole. During replacement of the existing drainage manhole the contractor shall re-install the gravity line, through the new drainage manhole, using Ductile Iron pipe. Ductile Iron Pipe shall be installed through the new manhole and a minimum of 5 feet either side of the manhole not to exceed a total length of 18 feet. Connections shall be rubber sleeves similar to that of Fernco or approved equal. All products must be in accordance with these specifications and in reasonably close conformity with the lines and grades of the existing gravity sewer.

Materials

Meet Sections:

Sewer Line Bedding and Initial Backfilling Stone	703.02 for class AA
Ductile-Iron Pipe 300mm [12 in dia]	ANSI/AWWA C151
Fernco PlumbQwik	SERIES1051

Construction Requirements

Excavation Trenches shall be excavated in accordance with the requirements of Section 206 - Structural Excavation and wide enough to allow joining the pipe and compacting the bedding and backfill material under and around the pipe. Unless otherwise designated the trench width shall be no greater than necessary for installation of the pipe.

Bedding The sewer line shall be bedded in 300 mm [12 in] minimum of ¾ stone.

Laying The Contractor shall not install nor backfill sewer pipes between December 15th and April 1st without written permission. Installing shall begin at the downhill end of the sewer line. Bell or groove ends shall be placed facing uphill.

Joining The pipe ends shall be thoroughly cleaned before the joint is made. Joints shall be made with rubber connectors such as Fernco PlumbQwik Connectors (or approved equal) in accordance with the manufacturer's recommended procedures. Water tight connection must be used where DI pipe enters and exits the drainage manhole. Water tight connections must be approved by the departments Resident Engineer.

Backfilling After the sewer pipe is installed, it will be inspected before any backfill material is placed. All sewer pipes found to be out of alignment, unduly settled or damaged to the extent that full performance is impaired, shall be taken up and re-laid or replaced.

Trenches shall be backfilled in accordance with Section 206.03 and as follows. The initial layer of backfill material shall cover the pipe by a minimum of 150 mm [6 in] of stone. The remainder of the backfill shall be original excavation in 300 mm [12 in] maximum lifts and shall be thoroughly compacted with power tampers or vibratory compactors or other approved equipment or combination of equipment.

Submittals Contractor must submit material cut sheets for approval to superintendent of the Kittery Sewer District at least 2 weeks prior to installation.

Basis of Payment The accepted quantities of Sanitary sewer pipe will be paid for as one lump sum for the types and sizes specified, complete in place and shall be full compensation for all labor, materials, equipment, excavation, dewatering, bedding, furnishing and installing pipe, removal and disposal of existing pipes, adjusting and connecting to manhole, backfill, compacting, cleaning, testing, maintaining existing flows, and all other incidental required.

No payment will be made for pipe ordered without written approval of the Resident when such pipe is not required to be installed for completion of the work.

Payment will be made under:

Pay Item		Pay Unit
801.181	300 mm [12 in] Ductile Iron Sanitary Sewer	Lump Sum

SPECIAL PROVISION
SECTION 812
SEWER MANHOLE

812.01 Description

This work shall consist of the rebuilding and adjustment of manholes as indicated in the Bid Book, Plans, or as directed by the Resident.

Adjust Sewer Manhole to Grade shall consist of adjusting a manhole to the required final grade, including any lowering and any other adjustments that may be necessary prior to setting the final grade and in accordance with this Section and Section 604 - Manholes, Inlets, and Catch Basins.

Existing sewer manholes shall be dismantled sufficiently to allow altering, adjusting or rebuilding in accordance to specifications and standard detail. When existing frames and covers are used, they shall be thoroughly cleaned of existing mortar before placing to new grade

a) Adjusting Manholes – The existing top assembly shall be removed, thoroughly cleaned, and reset to the new grade using Portland Type II cement and bricks. Adjustment by brick is not to exceed one or two courses.

b) Final grade will be determined by Resident or State Inspector.

All salvaged material not reused, **for manholes**, is the property of the Town. Items include frames, grates, covers, granite curb.
Each manhole altered, adjusted or reconstructed shall be cleaned of all accumulated silt, debris and other foreign matter before final acceptance of the work.

812.02 – Materials – allowed for Sewer manhole work

Portland Type II Cement
Clay or Shale Brick
Concrete Masonry Blocks
Joint Mortar
Reinforcing Steel
Stone Curbing and Edging

Except as otherwise provided on the plans, concrete for these structures shall meet the requirements of section 502 – Structural Concrete.

If new frames and covers are needed for any sewer manhole they will be supplied by the Kittery Sewer District.

Pay Item		Pay Unit
812.162	Adjust Sewer Manhole to Grade	Each

STANDARD DETAIL UPDATES

Standard Details and Standard Detail updates are available at:
http://www.maine.gov/mdot/contractor-consultant-information/ss_standard_details_updates.php

Detail #	Description	Revision Date
504(15)	Diaphragms	12/30/02
507(04)	Steel Bridge Railing	2/05/03
526(33)	Concrete Transition Barrier	8/18/03
645(06)	H-Beam Posts – Highway Signing	7/21/04
645(09)	Installation of Type II Signs	7/21/04
626(09)	Electrical Junction Box for Traffic Signals and Lighting	2/25/05
604(01)	Catch Basins	11/16/05
604(05)	Type “A” & “B” Catch Basin Tops	11/16/05
604(06)	Type “C” Catch Basin Tops	11/16/05
604(07)	Manhole Top “D”	11/16/05
604(09)	Catch Basin Type “E”	11/16/05
606(02)	Multiple Mailbox Support	11/16/05
606(07)	Reflectorized Beam Guardrail Delineator Details	11/16/05
609(06)	Vertical Bridge Curb	11/16/05
504(23)	Hand-Hold Details	12/08/05
609(03)	Curb Type 3	6/27/06
609(07)	Curb Type 1	6/27/06
535(01)	Precast Superstructure - Shear Key	10/12/06
535(02)	Precast Superstructure - Curb Key & Drip Notch	10/12/06
535(03)	Precast Superstructure - Shear Key	10/12/06

535(04)	Precast Superstructure - Shear Key	10/12/06
535(05)	Precast Superstructure - Post Tensioning	10/12/06
535(06)	Precast Superstructure - Sections	10/12/06
535(07)	Precast Superstructure - Precast Slab & Box	10/12/06
535(08)	Precast Superstructure - Sections	10/12/06
535(09)	Precast Superstructure - Sections	10/12/06
535(10)	Precast Superstructure - Sections	10/12/06
535(11)	Precast Superstructure - Sections	10/12/06
535(12)	Precast Superstructure - Sections	10/12/06
535(13)	Precast Superstructure - Sections	10/12/06
535(14)	Precast Superstructure - Stirrups	10/12/06
535(15)	Precast Superstructure - Plan	10/12/06
535(16)	Precast Superstructure - Reinforcing	10/12/06
535(17)	Precast Superstructure - Notes	10/12/06
801(01)	Drives on Sidewalk Sections	2/06/07
801(02)	Drives on Non-Sidewalk Sections	2/06/07
535(03)	Precast Superstructure - Shear Key	12/5/07
535(04)	Precast Superstructure - Shear Key	12/5/07
535(05)	Precast Superstructure - Post Tensioning	12/5/07
535(17)	Precast Superstructure - Notes	12/5/07
801(01)	Drives on Sidewalk Sections	1/04/08
801(02)	Drives on Non-Sidewalk Sections	1/04/08
203(03)	Backslope Rounding	1/29/08

SUPPLEMENTAL SPECIFICATION

(Corrections, Additions, & Revisions to Standard Specifications - Revision of December 2002)

SECTION 101
CONTRACT INTERPRETATION

101.2 Definitions

Closeout Documentation Replace the sentence "A letter stating the amount….. DBE goals." with "DBE Goal Attainment Verification Form"

Add "Environmental Information Hazardous waste assessments, dredge material test results, boring logs, geophysical studies, and other records and reports of the environmental conditions. For a related provision, see Section 104.3.14 - Interpretation and Interpolation."

Add "Fabrication Engineer The Department's representative responsible for Quality Assurance of pre-fabricated products that are produced off-site."

Geotechnical Information Replace with the following: "Boring logs, soil reports, geotechnical design reports, ground penetrating radar evaluations, seismic refraction studies, and other records of subsurface conditions. For a related provision, see Section 104.3.14 - Interpretation and Interpolation."

SECTION 102
DELIVERY OF BIDS

102.7.1 Location and Time Add the following sentence "As a minimum, the Bidder will submit a Bid Package consisting of the Notice to Contractors, the completed Acknowledgement of Bid Amendments form, the completed Schedule of Items, 2 copies of the completed Agreement, Offer, & Award form, a Bid Bond or Bid Guarantee, and any other Certifications or Bid Requirements listed in the Bid Book."

102.11.1 Non-curable Bid Defects Replace E. with "E. The unit price and bid amount is not provided or a lump sum price is not provided or is illegible as determined by the Department."

SECTION 103
AWARD AND CONTRACTING

103.3.1 Notice and Information Gathering Change the first paragraph to read as follows: "After Bid Opening and as a condition for Award of a Contract, the Department may require an Apparent Successful Bidder to demonstrate to the Department's satisfaction that the Bidder is responsible and qualified to perform the Work."

SECTION 104
GENERAL RIGHTS AND RESPONSIBILITIES

104.3.14 Interpretation and Interpolation In the first sentence, change "…and Geotechnical Information." to "…Environmental Information, and Geotechnical Information."
Delete the entire Section 104.5.9 and replace with the following:

"104.5.9 Landscape Subcontractors The Contractor shall retain only Landscape Subcontractors that are certified by the Department's Environmental Office Landscape Unit."

SECTION 105
GENERAL SCOPE OF WORK

Delete the entire Section 105.6 and replace with the following:

105.6.1 Department Provided Services The Department will provide the Contractor with the description and coordinates of vertical and horizontal control points, set by the Department, within the Project Limits, for full construction Projects and other Projects where survey control is necessary. For Projects of 1,500 feet in length, or less: The Department will provide three points. For Projects between 1,500 and 5,000 feet in length: The Department will provide one set of two points at each end of the Project. For Projects in excess of 5,000 feet in length, the Department will provide one set of two points at each end of the Project, plus one additional set of two points for each mile of Project length. For non-full construction Projects and other Projects where survey control is not necessary, the Department will not set any control points and, therefore, will not provide description and coordinates of any control points. Upon request of the Contractor, the Department will provide the Department's survey data management software and Survey Manual to the Contractor, or its survey Subcontractor, for the exclusive use on the Department's Projects.

105.6.2 Contractor Provided Services Utilizing the survey information and points provided by the Department, described in Subsection 105.6.1, Department Provided Services, the Contractor shall provide all additional survey layout necessary to complete the Work. This may include, but not be limited to, reestablishing all points provided by the Department, establishing additional control points, running axis lines, providing layout and maintenance of all other lines, grades, or points, and survey quality control to ensure conformance with the Contract. The Contractor is also responsible for providing construction centerline, or close reference points, for all Utility Facilities relocations and adjustments as necessary to complete the Work. When the Work is to connect with existing Structures, the Contractor shall verify all dimensions before proceeding with the Work. The Contractor shall employ or retain competent engineering and/or surveying personnel to fulfill these responsibilities.

The Contractor must notify the Department of any errors or inconsistencies regarding the data and layout provided by the Department as provided by Section 104.3.3 - Duty to Notify Department If Ambiguities Discovered.

105.6.2.1 Survey Quality Control The Contractor is responsible for all construction survey quality control. Construction survey quality control is generally defined as, first, performing initial field survey layout of the Work and, second, performing an independent check of the initial layout using independent survey data to assure the accuracy of the initial layout; additional iterations of checks may be required if significant discrepancies are discovered in this process. Construction survey layout quality control also requires written documentation of the layout process such that the process can be followed and repeated, if necessary, by an independent survey crew.

105.6.3 Survey Quality Assurance It is the Department's prerogative to perform construction survey quality assurance. Construction survey quality assurance may, or may not, be performed by the Department. Construction survey quality assurance is generally defined as an independent check of the construction survey quality control. The construction survey quality assurance process may involve physically checking the Contractor's construction survey layout using independent survey data, or may simply involve reviewing the construction survey quality control written documentation. If the Department elects to physically check the Contractor's survey layout, the Contractor's designated surveyor may be required to be present. The Department will provide a minimum notice of 48 hours to the Contractor, whenever possible, if the Contractor's designated surveyor's presence is required. Any errors discovered through the quality assurance process shall be corrected by the Contractor, at no additional cost to the Department.

105.6.4 Boundary Markers The Contractor shall preserve and protect from damage all monuments or other points that mark the boundaries of the Right-of-Way or abutting parcels that are outside the area that must be disturbed to perform the Work. The Contractor indemnifies and holds harmless the Department from all claims to reestablish the former location of all such monuments or points including claims arising from 14 MRSA § 7554-A. For a related provision, see Section 104.3.11 - Responsibility for Property of Others.

SECTION 106
QUALITY

106.4.3 Testing Change the first sentence in paragraph three from "…maintain records of all inspections and tests." to "…maintain original documentation of all inspections, tests, and calculations used to generate reports."

106.6 Acceptance Add the following to paragraph 1 of A: "This includes Sections 401 - Hot Mix Asphalt, 402 - Pavement Smoothness, and 502 - Structural Concrete - Method A - Air Content."

Add the following to the beginning of paragraph 3 of A: "For pay factors based on Quality Level Analysis, and"

106.7.1 Standard Deviation Method Add the following to F: "Note: In cases where the mean of the values is equal to either the USL or the LSL, then the PWL will be 50 regardless of the computed value of s."

Add the following to H: "Method C Hot Mix Asphalt: PF = [55 + (Quality Level *0.5)] * 0.01"

SECTION 107
TIME

107.3.1 General Add the following: "If a Holiday occurs on a Sunday, the following Monday shall be considered a Holiday. Sunday or Holiday work must be approved by the Department, except that the Contractor may work on Martin Luther King Day, President's Day, Patriot's Day, the Friday after Thanksgiving, and Columbus Day without the Department's approval."

107.7.2 Schedule of Liquidated Damages Replace the table of Liquidated Damages as follows:

From More Than	Up to and Including	Amount of Liquidated Damages per Calendar Day
$0	$100,000	$100
$100,000	$300,000	$200
$300,000	$500,000	$400
$500,000	$1,000,000	$575
$1,000,000	$2,000,000	$750
$2,000,000	$4,000,000	$900
$4,000,000	and more	$1,875

SECTION 108
PAYMENT

108.4 Payment for Materials Obtained and Stored First paragraph, second sentence, delete the words "…Delivered on or near the Work site at acceptable storage places."

SECTION 109
CHANGES

109.1.1 Changes Permitted Add the following to the end of the paragraph: "There will be no adjustment to Contract Time due to an increase or decrease in quantities, compared to those estimated, except as addressed through Contract Modification(s)."

109.1.2 Substantial Changes to Major Items Add the following to the end of the paragraph: "Contract Time adjustments may be made for substantial changes to Major Items when the change affects the Critical Path, as determined by the Department"

109.4.4 Investigation / Adjustment Third sentence, delete the words "subsections (A) - (E)"

109.5.1 Definitions - Types of Delays

B. Compensable Delay Replace (1) with the following; "a weather related Uncontrollable Event of such an unusually severe nature that a Federal Emergency Disaster is declared. The Contractor will only be entitled to an Equitable Adjustment if the Project falls within the geographic boundaries prescribed under the disaster declaration."

109.7.2 Basis of Payment Replace with the following: "Equitable Adjustments will be established by mutual Agreement for compensable items listed in Section 109.7.3-Compensable Items, based upon Unit or Lump Sum Prices. If Agreement cannot be reached, the Contractor shall accept payment on a Force Account basis as provided in Section 109.7.5 - Force Account Work, as full and complete compensation for all Work relating to the Equitable Adjustment."

109.7.3 Compensable Items Replace with the following: "The Contractor is entitled to compensation for the following items, with respect to agreed upon Unit or Lump Sum Prices:

1. Labor expenses for non-salaried Workers and salaried foremen.

2. Costs for Materials.

3. A 15 % markup on the totals of Items 1 and 2 of this subsection 109.7.3 for home office overhead and profit of the Contractor, its Subcontractors and suppliers, and any lower tier Subcontractors or suppliers, with no mark-ups on mark-ups.

4. Cost for Equipment, based on Blue Book Rates or leased rates, as set forth in Section 109.7.5(C), or the Contractor's Actual Costs if determined by the Department to be lower.

5. Time.

6. Subcontractor quoted Work, as set forth below in Section 109.7.5 (F)."

109.7.5 Force Account Work

C. Equipment

Paragraph 2, delete sentence 1 which starts; "Equipment leased…."

Paragraph 6, change sentence 2 from "The Contractor may furnish…" to read "If requested by the Department, the Contractor will produce cost data to assist the Department in the establishment of such rental rate, including all records that are relevant to the Actual Costs including rental Receipts, acquisition costs, financing documents, lease Agreements, and maintenance and operational cost records."
Add the following paragraph; "Equipment leased by the Contractor for Force Account Work and actually used on the Project will be paid for at the actual invoice amount plus 10% markup for administrative costs."

Add the following section;

"F. Subcontractor Quoted Work When accomplishing Force Account Work that utilizes Subcontractors, the Contractor will be allowed a maximum markup of 5% for profit and overhead on the Subcontractor's portion of the Force Account Work."

SECTION 110
INDEMNIFICATION, BONDING, AND INSURANCE

Delete the entire Section 110.2.3 and replace with the following:

110.2.3 Bonding for Landscape Establishment Period The Contractor shall provide a signed, valid, and enforceable Performance, Warranty, or Maintenance Bond complying with the Contract, to the Department at Final Acceptance.

The bond shall be in the full amount for all Pay Items for work pursuant to Sec 621, Landscape, payable to the "Treasurer - State of Maine," and on the Department's forms, on exact copies thereof, or on forms that do not contain any significant variations from the Department's forms as solely determined by the Department.

The Contractor shall pay all premiums and take all other actions necessary to keep said bond in effect for the duration of the Landscape Establishment Period described in Special Provision 621.0036 - Establishment Period. If the Surety becomes financially insolvent, ceases to be licensed or approved to do business in the State of Maine, or stops operating in the United States, the Contractor shall file new bonds complying with this Section within 10 Days of the date the Contractor is notified or becomes aware of such change.

All Bonds shall be procured from a company organized and operating in the United States, licensed or approved to do business in the State of Maine by the State of Maine Department of Business Regulation, Bureau of Insurance, and listed on the latest Federal Department of the Treasury listing for "Companies Holding Certificates of Authority as Acceptable Sureties on Federal Bonds and as Acceptable Reinsuring Companies."

By issuing a bond, the Surety agrees to be bound by all terms of the Contract, including those related to payment, time for performance, quality, warranties, and the Department's self-help remedy provided in Section 112.1 - Default to the same extent as if all terms of the Contract are contained in the bond(s).

Regarding claims related to any obligations covered by the bond, the Surety shall provide, within 60 Days of Receipt of written notice thereof, full payment of the entire claim or written notice of all bases upon which it is denying or contesting payment. Failure of the Surety to provide such notice within the 60-day period constitutes the Surety's waiver of any right to deny or contest payment and the Surety's acknowledgment that the claim is valid and undisputed.

SECTION 202
REMOVING STRUCTURES AND OBSTRUCTIONS

202.02 Removing Buildings Make the following change to the last sentence in the final paragraph, change "…Code of Maine Regulations 401." to "…Department of Environmental Protection Maine Solid Waste Management Rules, 06-096 CMR Ch. 401, Landfill Siting, Design and Operation."

SECTION 203
EXCAVATION AND EMBANKMENT

203.01 Description Under b. Rock Excavation; add the following sentence: "The use of perchlorate is not allowed in blasting operations."

SECTION 502
STRUCTURAL CONCRETE

502.05 Composition and Proportioning; TABLE #1; NOTE #2; third sentence; Change "…alcohol based saline sealer…" to "alcohol based silane sealer…". Add NOTE #6 to Class S Concrete.

502.0502 Quality Assurance Method A - Rejection by Resident Change the first sentence to read: "For an individual sublot with test results failing to meet the criteria in Table #1, or if the calculated pay factor for Air Content is less than 0.80……"

502.0503 Quality Assurance Method B - Rejection by Resident Change the first sentence to read: "For material represented by a verification test with test results failing to meet the criteria in Table #1, the Department will……"

502.0505 Resolution of Disputed Acceptance Test Results Combine the second and third sentence to read: "Circumstances may arise, however, where the Department may ……"
502.10 Forms and False work

D. Removal of Forms and False work 1., First paragraph; first, second, and third sentence; replace "forms" with "forms and false work"

502.11 Placing Concrete

G. Concrete Wearing Surface and Structural Slabs on Precast Superstructures Last paragraph; third sentence; replace "The temperature of the concrete shall not exceed 24° C [75° F} at the time of placement." with "The temperature of the concrete shall not exceed 24° C [75° F} at the time the concrete is placed in its final position."

502.15 Curing Concrete First paragraph; replace the first sentence with the following; "All concrete surfaces shall be kept wet with clean, fresh water for a curing period of at least 7 days after concrete placing, with the exception of vertical surfaces as provided for in Section 502.10 (D) - Removal of Forms and False work."

Second paragraph; delete the first two sentences.

Third paragraph; delete the entire paragraph which starts "When the ambient temperature…."

Fourth paragraph; delete "approved" to now read "…continuously wet for the entire curing period…"

Fifth paragraph; second sentence; change "…as soon as it is possible to do so without damaging the concrete surface." to "…as soon as possible."

Seventh paragraph; first sentence; change "…until the end of the curing period." to "…until the end of the curing period, except as provided for in Section 502.10(D) - Removal of Forms and False work."

502.19 Basis of Payment First paragraph, second sentence; add "pier nose armor" to the list of items included in the contract price for concrete.

SECTION 503
REINFORCING STEEL

503.06 Placing and Fastening Change the second paragraph, first sentence from: "All tack welding shall be done in accordance with Section 504, Structural Steel." to "All tack welding shall be done in accordance with AWS D1.4 Structural Welding Code - Reinforcing Steel."

SECTION 504
STRUCTURAL STEEL

504.09 Facilities for Inspection Add the follow as the last paragraph: "Failure to comply with the above requirements will be consider to be a denial to allow access to work by the Contractor. The Department will reject any work done when access for inspection is denied."

504.18 Plates for Fabricated Members Change the second paragraph, first sentence from: "…ASTM A 898/A 898 M…" to "…ASTM A 898/A 898 M or ASTM A 435/A 435 M as applicable and…"

504.31 Shop Assembly Add the following as the last sentence: "The minimum assembly length shall include bearing centerlines of at least two substructure units."

504.64 Non Destructive Testing-Ancillary Bridge Products and Support Structures Change the third paragraph, first sentence from "One hundred percent…" to "Twenty five percent…"

SECTION 535
PRECAST, PRESTRESSED CONCRETE SUPERSTRUCTURE

535.02 Materials Change "Steel Strand for Concrete Reinforcement" to "Steel Strand." Add the following to the beginning of the third paragraph; "Concrete shall be Class P conforming to the requirements in this section. 28 day compressive strength shall be as stated on the plans. Coarse aggregate…."

535.05 Inspection Facilities Add the follow as the last paragraph: "If the above requirements are not met, the Contractor shall be considered to be in violation of Standard Specification 104.2.5 – Right to Inspect Work. All work occurring during a violation of this specification will be rejected."

535.26 Lateral Post-Tensioning Replace the first paragraph; "A final tension…" with "Overstressing strands for setting losses cannot be accomplished for chuck to chuck lengths of 7.6 m [25 ft] and less. In such instances, refer to the Plans for all materials and methods. Otherwise, post-tensioning shall be in accordance with PCI standards and shall provide the anchorage force noted in the Plans. The applied jacking force shall be no less than 100% of the design jacking force."

SECTION 603
PIPE CULVERTS AND STORM DRAINS

603.0311 Corrugated Polyethylene Pipe for Option III Replace the Minimum Mandrel Diameter Table with the following:

Nominal Size US Customary (in)	Minimum Mandrel Diameter (in)	Nominal Size Metric (mm)	Minimum Mandrel Diameter (mm)
12	11.23	300	280.73
15	14.04	375	350.91
18	16.84	450	421.09
24	22.46	600	561.45
30	28.07	750	701.81
36	33.69	900	842.18
42	39.30	1050	982.54
48	44.92	1200	1122.90

SECTION 604
MANHOLES, INLETS, AND CATCH BASINS

604.02 Materials Add the following:

"Tops and Traps	712.07
Corrugated Metal Units	712.08
Catch Basin and Manhole Steps	712.09"

SECTION 605
UNDERDRAINS

605.05 Underdrain Outlets Make the following change:

In the first paragraph, second sentence, delete the words "metal pipe".

SECTION 606
GUARDRAIL

606.02 Materials Delete the entire paragraph which reads "The sole patented supplier of multiple mailbox…." and replace with "Acceptable multiple mailbox assemblies shall be listed on the Department's Approved Products List and shall be NCHRP 350 tested and approved."
Delete the entire paragraph which reads "Retroreflective beam guardrail delineators…." and replace with "Reflectorized sheeting for Guardrail Delineators shall meet the requirements of Section 719.01 - Reflective Sheeting. Delineators shall be fabricated from high-impact, ultraviolet and weather resistant thermoplastic.

606.09 Basis of Payment First paragraph; delete the second and third sentence in their entirety and replace with "Butterfly-type guardrail reflectorized delineators shall be mounted on all W-beam guardrail at an interval of every 10 posts [62.5 ft] on tangents sections and every 5 posts [31.25 ft] on curved sections as directed by the Resident. On divided highways, the delineators shall be yellow on the left hand side and silver/white on the right hand side. On two-way

roadways, the delineators shall be silver/white on the right hand side. All delineators shall have retroreflective sheeting applied to only the traffic facing side. Reflectorized guardrail delineators will not be paid for directly, but will be considered incidental to the guardrail items."

SECTION 609
CURB

609.04 Bituminous Curb f., Delete the requirement "Color Natural (White)"

SECTION 615
LOAM

615.02 Materials Make the following change:

Organic Content	Percent by Volume
Humus	"5% - 10%", as determined by Ignition Test

SECTION 618
SEEDING

618.01 Description Change the first sentence to read as follows: "This work shall consist of furnishing and applying seed ….." Also remove ",and cellulose fiber mulch" from 618.01(a).
618.03 Rates of Application In 618.03(a), remove the last sentence and replace with the following: "These rates shall apply to Seeding Method 2, 3, and Crown Vetch."

In 618.03(c) "1.8 kg [4 lb]/unit." to "1.95 kg [4 lb]/unit."

618.09 Construction Method In 618.09(a) 1, sentence two, replace "100 mm [4 in]" with "25 mm [1 in] (Method 1 areas) and 50 mm [2 in] (Method 2 areas)"

618.15 Temporary Seeding Change the Pay Unit from Unit to Kg [lb].

SECTION 620
GEOTEXTILES

620.03 Placement Section (c)

Title: Replace "Non-woven" in title with "Erosion Control".
First Paragraph: Replace first word "Non-woven" with "Woven monofilament".
Second Paragraph: Replace second word "Non-woven" with "Erosion Control".

620.07 Shipment, Storage, Protection and Repair of Fabric Section (a)

Replace the second sentence with the following: "Damaged geotextiles, as identified by the Resident, shall be repaired immediately."

620.09 Basis of Payment

Pay Item 620.58: Replace "Non-woven" with "Erosion Control"
Pay Item 620.59: Replace "Non-woven" with "Erosion Control"

SECTION 621
LANDSCAPING

621.0036 Establishment Period In paragraph 4 and 5, change "time of Final Acceptance" to "end of the period of establishment". In Paragraph 7, change "Final Acceptance date" to ""end of the period of establishment" and change "date of Final Acceptance" to "end of the period of establishment".

SECTION 626
HIGHWAY SIGNING

626.034 Concrete Foundations Add to the following to the end of the second paragraph: "Pre-cast and cast-in-place foundations shall be warranteed against leaning and corrosion for two years after the project is completed. If the lean is greater than 2 degrees from normal or the foundation is spalling within the first two years, the Contractor shall replace the foundation at no extra cost."

SECTION 627
PAVEMENT MARKINGS

627.10 Basis of Payment Add to the following to the end of the third paragraph: "If allowed by Special Provision, the Contractor may utilize Temporary Bi-Directional Yellow and White(As required) Delineators as temporary pavement marking lines and paid for at the contract lump sum price. Such payment will include as many applications as required and removal."

SECTION 637
DUST CONTROL

637.06 Basis of Payment Add the following after the second sentence of the third paragraph: "Failure by the Contractor to follow Standard Specification or Special Provision - Section 637 and/or the Contractor's own Soil Erosion and Pollution Control Plan concerning Dust Control and/or the Contractor's own Traffic Control Plan concerning Dust Control and/or visible evidence of excessive dust problems, as determined by the Resident, will result in a reduction in payment, computed by reducing the Lump Sum Total by 5% per occurrence per day. The Department's Resident or any other representative of the Department reserves the right to suspend the work at any time and request a meeting to discuss violations and remedies. The Department shall not be held responsible for any delay in the work due to any suspension under this item. Additional penalties may also be assessed in accordance with Special Provision 652 - Work Zone Traffic Control and Standard Specification 656 - Temporary Soil Erosion and Water Pollution Control."

SECTION 639
ENGINEERING FACILITIES

639.04 Field Offices Change the forth to last paragraph from: "The Contractor shall provide a fully functional desktop copier…" to "….desktop copier/scanner…"

Description Change "Floor Area" to "Floor Area (Outside Dimension)". Change Type B floor area from "15 (160)" to "14.4 (155)".

SECTION 652
MAINTENANCE OF TRAFFIC

652.2.3 Flashing Arrow Board Delete the existing 5 paragraphs and replace with the following: Flashing Arrow Panels (FAP) must be of a type that has been submitted to AASHTO's National Transportation Product Evaluation Program (NTPEP) for evaluation and placed on the Maine Department of Transportations' Approved Products List of Portable Changeable Message Signs & Flashing Arrow Panels.

FAP units shall meet requirements of the current Manual on Uniform Traffic Control Devices (MUTCD) for Type "C" panels as described in Section 6F.56 - Temporary Traffic Control Devices. An FAP shall have matrix of a minimum of 15 low-glare, sealed beam, Par 46 elements capable of either flashing or sequential displays as well as the various operating modes as described in the MUTCD, Chapter 6-F. If an FAP consisting of a bulb matrix is used, each element should be recess-mounted or equipped with an upper hood of not less than 180 degrees. The color presented by the elements shall be yellow.

FAP elements shall be capable of at least a 50 percent dimming from full brilliance. Full brilliance should be used for daytime operation and the dimmed mode shall be used for nighttime operation. FAP shall be at least 2.4 M x 1.2 M [96" x 48"] and finished in non-reflective black. The FAP shall be interpretable for a distance not less than 1.6 km [1 mile].

Operating modes shall include, flashing arrow, sequential arrow, sequential chevron, flashing double arrow, and flashing caution. In the three arrow signals, the second light from the arrow point shall not operate.

The minimum element on-time shall be 50 percent for the flashing mode, with equal intervals of 25 percent for each sequential phase. The flashing rate shall be not less than 25 nor more than 40 flashes per minute. All on-board circuitry shall be solid state.

Primary power source shall be 12 volt solar with a battery back-up to provide continuous operation when failure of the primary power source occurs, up to 30 days with fully charged batteries. Batteries must be capable of being charged from an onboard 110 volt AC power source and the unit shall be equipped with a cable for this purpose.

Controller and battery compartments shall be enclosed in lockable, weather-tight boxes.
The FAP shall be mounted on a pneumatic-tired trailer or other suitable support for hauling to various locations, as directed. The minimum mounting height of an arrow panel should be 2.1 M [7 feet] from the roadway to the bottom of the panel.

The face of the trailer shall be delineated on a permanent basis by affixing retro-reflective material, known as conspicuity material, in a continuous line as seen by oncoming drivers.

A portable changeable message sign may be used to simulate an arrow panel display."

652.2.4 Other Devices Delete the last paragraph and add the following:
"652.2.5 Portable Changeable Message Sign Trailer mounted Portable Changeable Message Signs (PCMS) must be of a type that has been submitted to AASHTO's National

Transportation Product Evaluation Program (NTPEP) for evaluation and placed on the Maine Department of Transportations' Approved Products List of Portable Changeable Message Signs & Flashing Arrow Panels. The PCMS unit shall meet or exceed the current specifications of the Manual on Uniform Traffic Control Devices (MUTCD), 6F.55.

The front face of the sign should be covered with a low-glare protective material. The color of the LED elements shall be amber on a black background. The PCMS should be visible from a distance of 0.8 km [0.5 mile] day and night and have a minimum 15º viewing angle. Characters must be legible from a distance of at least 200 M [650 feet].

The message panel should have adjustable display rates (minimum of 3 seconds per phase), so that the entire message can be read at least twice at the posted speed, the off-peak 85th-percentile speed prior to work starting, or the anticipated operating speed. Each message shall consist of either one or two phases. A phase shall consist of up to eight characters per line. The unit must be capable of displaying at least three lines of text with eight characters per line. Each character shall be 457 mm [18"] high. Each character module shall use at least a five wide and seven high pixel matrix. The text of the messages shall not scroll or travel horizontally or vertically across the face of the sign.

Units shall automatically adjust their brightness under varying light conditions to maintain legibility.

The control system shall include a display screen upon which messages can be reviewed before being displayed on the message sign. The control system shall be capable of maintaining memory when power is unavailable. Message must be changeable with either a notebook computer or an on-board keypad. The controller shall have the capability to store a minimum of 200 user-defined and 200 pre-programmed messages. Controller and battery compartments shall be enclosed in lockable, weather-tight boxes.

PCMS units shall have the capability of being made programmable by means of wireless communications. PCMS units shall also be fully capable of having an on-board radar system installed if required for a particular application.

PCMS' primary power source shall be solar with a battery back-up to provide continuous operation when failure of the primary power source occurs. Batteries must be capable of being charged from a 110 volt AC power source. The unit must also be capable of being operated solely from a 110 volt AC power source and be equipped with a cable for this purpose.

The PCMS shall be mounted on a trailer in such a way that the bottom of the message sign panel shall be a minimum of 2.1 M [7 ft] above the roadway in urban areas and 1.5 M [5 ft] above the roadway in rural areas when it is in the operating mode. PCMS trailers should be of a heavy duty type with a 51 mm [2"] ball hitch and a minimum of four leveling jacks (at each corner). The sign shall be capable of being rotated 360° relative to the trailer. The face of the trailer shall be delineated on a permanent basis by affixing retro-reflective material, known as conspicuity material, in a continuous line as seen by oncoming drivers."

652.3.3 Submittal of Traffic Control Plan In item e. change "A list of all certified flaggers…" to "A list of all the Contractor's certified flaggers…"

In the last paragraph add the following as the second sentence: "The Department will review and provide comments to the Contractor within 14 days of receipt of the TCP."

652.3.5 Installation of Traffic Control Devices In the first paragraph, first sentence; change "Signs shall be erected…" to "Portable signs shall be erected.." In the third sentence; change "Signs must be erected so that the sign face…" to "Post-mounted signs must also be erected so that the sign face…"

652.4 Flaggers Replace the first paragraph with the following; "The Contractor shall furnish flaggers as required by the TCP or as otherwise specified by the Resident. All flaggers must have successfully completed a flagger test approved by the Department and administered by a Department-approved Flagger-Certifier who is employing that flagger. All flaggers must carry an official certification card with them while flagging that has been issued by their employer. Flaggers shall wear safety apparel meeting ANSI 107-1999 Class 2 risk exposure and clearly identify the wearer as a person, shall be visible at a minimum distance of 300 m [1000 ft], and shall wear a hardhat with retroreflectivity. For nighttime conditions, Class 3 apparel should be considered, retroreflective or flashing SLOW/STOP paddles shall be used, and except in emergency situations the flagger station shall be illuminated to assure visibility."

Second paragraph, first sentence; change "…have sufficient distance to stop before entering the workspace." to "…have sufficient distance to stop at the intended stopping point." Third sentence; change "At a spot obstruction…" to "At a spot obstruction with adequate sight distance,…"

Fourth paragraph, delete and replace with "Flaggers shall be provided as a minimum, a 10 minute break, every 2 hours and a 30 minute or longer lunch period away from the work station. Flaggers may only receive 1 unpaid break per day; all other breaks must be paid. Sufficient certified flaggers shall be available onsite to provide for continuous flagging operations during break periods. Breaker flaggers will not be paid for separately, but shall be considered incidental to the appropriate pay item."

652.8.2 Other Items Replace the last paragraph with the following: "There will be no payment made under any 652 pay items after the expiration of the adjusted total contract time."

SECTION 653
POLYSTYRENE PLASTIC INSULATION

653.05 Placing Backfill In the second sentence; change "…shall be not less than 150 mm [6 in] loose measure." to "…shall be not less than 250 mm [10 in] loose measure." In the third sentence; change "…crawler type bulldozer of not more than 390 kg/m^2 [80 lb/ft^2] ground contact pressure…" to "…crawler type bulldozer of not more than 4875 kg/m^2 [2000 lb/ft^2] ground contact pressure…"

653.06 Compaction In the last sentence; change "…not more than 390 kg/m^2 [80 lb/ft^2] ground contact…" to "…not more than 4875 kg/m^2 [2000 lb/ft^2] ground contact…"

SECTION 656
TEMPORARY SOIL EROSION AND WATER POLLUTION CONTROL

656.5.1 If Pay Item 656.75 Provided Replace the second paragraph with the following: "Failure by the Contractor to follow Standard Specification or Special Provision - Section 656 and/or the Contractor's own Soil Erosion and Pollution Control Plan will result in a reduction in payment, computed by reducing the Lump Sum Total by 5% per occurrence per day. The Department's Resident or any other representative of the Department reserves the right to suspend the work at any time and request a meeting to discuss violations and remedies. The Department shall not be held responsible for any delay in the work due to any suspension under this item."

SECTION 701
STRUCTURAL CONCRETE RELATED MATERIALS

701.10 Fly Ash - Chemical Requirements Change all references from "ASTM C311" to "ASTM C114".

SECTION 703
AGGREGATES

703.05 Aggregate for Sand Leveling Change the percent passing the 9.5 mm [3/8 in] sieve from "85 – 10" to "85 – 100"

703.06 Aggregate for Base and Subbase Delete the first paragraph: "The material shall have…" and replace with "The material shall have a minimum degradation value of 15 as determined by Washington State DOT Test Method T113, Method of Test for Determination of Degradation Value (March 2002 version), except that the reported degradation value will be the result of testing a single specimen from that portion of a sample that passes the 12.5 mm [½ in] sieve and is retained on the 2.00 mm [No. 10] sieve, minus any reclaimed asphalt pavement used."

703.07 Aggregates for HMA Pavements Delete the forth paragraph: "The composite blend shall have…" and replace with "The composite blend, minus any reclaimed asphalt pavement used, shall have a Micro-Deval value of 18.0 or less as determined by AASHTO T 327. In the event the material exceeds the Micro Deval limit, a Washington Degradation test shall be performed. The material shall be acceptable if it has a value of 30 or more as determined by Washington State DOT Test Method T 113, Method of Test for Determination of Degradation Value (March 2002 version) except that the reported degradation value will be the result of testing a single composite specimen from that portion of the sample that passes the 12.5mm [1/2 inch] sieve and is retained on the 2.00mm [No 10] sieve, minus any reclaimed asphalt pavement used."

703.09 HMA Mixture Composition The coarse and fine aggregate shall meet the requirements of Section 703.07. The several aggregate fractions for mixtures shall be sized, graded, and combined in such proportions that the resulting composite blends will meet the grading requirements of the following table.

AGGREGATE GRADATION CONTROL POINTS

SIEVE SIZE	Nominal Maximum Aggregate Size---Control Points (Percent Passing)				
	TYPE 25 mm	TYPE 19 mm	TYPE 12.5 mm	TYPE 9.5 mm	TYPE 4.75 mm
	PERCENT BY WEIGHT PASSING - COMBINED AGGREGATE				
37.5 mm	100				
25 mm	90-100	100			
19 mm	-90	90-100	100		
12.5 mm		-90	90-100	100	100
9.5 mm		-	-90	90-100	95-100
4.75 mm		-	-	-90	80-100
2.36 mm	19-45	23-49	28-58	32-67	40 - 80
1.18 mm		-	-	-	-
600 □m		-	-	-	-
300 □m		-	-	-	-
75 □m	1-7	2-8	2-10	2-10	2-10

Gradation Classification---- The combined aggregate gradation shall be classified as coarse-graded when it passes below the Primary Control Sieve (PCS) control point as defined in the following table. All other gradations shall be classified as fine-graded.

GRADATION CLASSIFICATION

PCS Control Point for Mixture Nominal Maximum Aggregate Size (% passing)				
Nominal Maximum Aggregate Size	TYPE 25 mm	TYPE 19 mm	TYPE 12.5 mm	TYPE 9.5 mm
Primary Control Sieve	4.75 mm	4.75 mm	2.36 mm	2.36 mm
PCS Control Point (% passing)	40	47	39	47

If a Grading "D" mixture is allowed per Special Provision Section 403, it shall meet the following gradation and the aggregate requirements of Section 703.07.

Sieve Designation	Percentage by Weight Passing Square Mesh Sieves
½ inch	100
⅜ inch	93-100
No. 4	60-80
No. 8	46-65
No. 16	25-55
No. 30	16-40
No. 50	10-30
No. 100	6-22
No. 200	3.0-8.0

703.18 Common Borrow Replace the first paragraph with the following: "Common borrow shall consist of earth, suitable for embankment construction. It shall be free from frozen material, perishable rubbish, peat, and other unsuitable material including material currently or previously contaminated by chemical, radiological, or biological agents unless the material is from a DOT project and authorized by DEP for use."

703.22 Underdrain Backfill Material Change the first paragraph from "…for Underdrain Type B…" to "…for Underdrain Type B and C…"

SECTION 706
NON-METALLIC PIPE

706.06 Corrugated Polyethylene Pipe for Underdrain, Option I and Option III Culvert Pipe Change the first sentence from "…300 mm diameters to 900 mm" to "…300 mm diameters to 1200 mm" Delete, in it's entirety, the last sentence which begins "This pipe and resins…" and replace with the following; "The manufacturing plants of polyethylene pipe shall be certified by the Eastern States Consortium. Polyethylene pipe shall be accepted based on third party certification by the AASHTO's National Transportation Product Evaluation Program."

SECTION 709
REINFORCING STEEL AND WELDED STEEL WIRE FABIC

709.03 Steel Strand Change the second paragraph from "…shall be 12mm [½ inch] AASHTO M203M/M203 (ASTM A416/A416M)…" to "…shall be 15.24 mm [0.600 inch] diameter AASHTO M203 (ASTM A416)…"

SECTION 710
FENCE AND GUARDRAIL

710.03 Chain Link Fabric Add the following sentence: "Chain Link fabric for PVC coated shall conform to the requirements of AASHTO M181, Type IV-Class B."

710.07 Guardrail Posts Section b. change "…AASHTO M183/M183M…" to "…AASHTO M 270M/M 270 Grade 250 (36)…"

SECTION 712
MISCELLANEOUS HIGHWAY MATERIALS

712.06 Precast Concrete Units In the first paragraph, change "…ASTM C478M…" to "…AASHTO M199…" Delete the second paragraph and replace with the following; "Approved structural fibers may be used as a replacement of 6 x 6 #10 gauge welded wire fabric when used at an approved dosage rate for the construction of manhole and catch basin units. The material used shall be one of the products listed on the Maine Department of Transportation's Approved Product List of Structural Fiber Reinforcement." Delete the fifth paragraph and replace with the following; "The concrete mix design shall be approved by the Department. Concrete shall contain 6% air content, plus or minus 1½% tolerance when tested according to AASHTO T152. All concrete shall develop a minimum compressive strength of 28 MPa [4000 psi] in 28 days when tested according to AASHTO T22. The absorption of a

specimen, when tested according to AASHTO T280, Test Method "A", shall not exceed nine percent of the dry mass."

Add the following:
"712.07 Tops, and Traps These metal units shall conform to the plan dimensions and to the following specification requirements for the designated materials.

Gray iron or ductile iron castings shall conform to the requirements of AASHTO M306 unless otherwise designated."

712.08 Corrugated Metal Units The units shall conform to plan dimensions and the metal to AASHTO M36/M36M. Bituminous coating, when specified, shall conform to AASHTO M190 Type A.

712.09 Catch Basin and Manhole Steps Steps for catch basins and for manholes shall conform to ASTM C478M [ASTM C478], Section 13 for either of the following material:

(a) Aluminum steps-ASTM B221M, [ASTM B211] Alloy 6061-T6 or 6005-T5.

(b) Reinforced plastic steps Steel reinforcing bar with injection molded plastic coating copolymer polypropylene. Polypropylene shall conform to ASTM D 4101.

712.23 Flashing Lights Flashing Lights shall be power operated or battery operated as specified.

(a) Power operated flashing lights shall consist of housing, adapters, lamps, sockets, reflectors, lens, hoods and other necessary equipment designed to give clearly visible signal indications within an angle of at least 45 degrees and from 3 to 90 m [10 to 300 ft] under all light and atmospheric conditions.

Two circuit flasher controllers with a two-circuit filter capable of providing alternate flashing operations at the rate of not less than 50 nor more than 60 flashes per minute shall be provided.

The lamps shall be 650 lumens, 120 volt traffic signal lamps with sockets constructed to properly focus and hold the lamp firmly in position.
The housing shall have a rotatable sun visor not less than 175 mm [7 in] in length designed to shield the lens.

Reflectors shall be of such design that light from a properly focused lamp will reflect the light rays parallel. Reflectors shall have a maximum diameter at the point of contact with the lens of approximately 200 mm [8 in].

The lens shall consist of a round one-piece convex amber material which, when mounted, shall have a visible diameter of approximately 200 mm [8 in]. They shall distribute light and not diffuse it. The distribution of the light shall be asymmetrical in a downward direction. The light distribution of the lens shall not be uniform, but shall consist of a small high intensity portion with narrow distribution for long distance throw and a larger

low intensity portion with wide distribution for short distance throw. Lenses shall be marked to indicate the top and bottom of the lens.

(b) Battery operated flashing lights shall be self- illuminated by an electric lamp behind the lens. These lights shall also be externally illuminated by reflex-reflective elements built into the lens to enable it to be seen by reflex-reflection of the light from the headlights of oncoming traffic. The batteries must be entirely enclosed in a case. A locking device must secure the case. The light shall have a flash rate of not less than 50 nor more than 60 flashes per minute from minus 30 °C [minus 20 °F] to plus 65 °C [plus 150 °F]. The light shall have an on time of not less than 10 percent of the flash cycle. The light beam projected upon a surface perpendicular to the axis of the light beam shall produce a lighted rectangular projection whose minimum horizontal dimension shall be 5 degrees each side of the horizontal axis. The effective intensity shall not have an initial value greater than 15.0 candelas or drop below 4.0 candelas during the first 336 hours of continuous flashing. The illuminated lens shall appear to be uniformly bright over its entire illuminated surface when viewed from any point within an angle of 9 degrees each side of the vertical axis and 5 degrees each side of the horizontal axis. The lens shall not be less than 175 mm [7 in] in diameter including a reflex-reflector ring of 13 mm [½ in] minimum width around the periphery. The lens shall be yellow in color and have a minimum relative luminous transmittance of 0.440 with a luminance of 2854° Kelvin. The lens shall be one-piece construction. The lens material shall be plastic and meet the luminous transmission requirements of this specification. The case containing the batteries and circuitry shall be constructed of a material capable of withstanding abuse equal to or greater than 1.21 mm thick steel [No. 18 U.S. Standard Gage Steel]. The housing and the lens frame, if of metal shall be properly cleaned, degreased and pretreated to promote adhesion. It shall be given one or more coats of enamel which, when dry shall completely obscure the metal. The enamel coating shall be of such quality that when the coated case is struck a light blow with a sharp tool, the paint will not chip or crack and if scratched with a knife will not powder. The case shall be so constructed and closed as to exclude moisture that would affect the proper operation of light. The case shall have a weep hole to allow the escape of moisture from condensation. Photoelectric controls, if provided, shall keep the light operating whenever the ambient light falls below 215 lx [20 foot candles]. Each light shall be plainly marked as to the manufacturer's name and model number.

If required by the Resident, certification as to conformance to these specifications shall be furnished based on results of tests made by an independent testing laboratory. All lights are subject to random inspection and testing. All necessary random samples shall be provided to the Resident upon request without cost to the Department. All such samples shall be returned to the Contractor upon completion of the tests.

712.32 Copper Tubing Copper tubing and fittings shall conform to the requirements of ASTM B88M Type A [ASTM B88, Type K] or better.

712.33 Non-metallic Pipe, Flexible Non-metallic pipe and pipe fittings shall be acceptable flexible pipe manufactured from virgin polyethylene polymer suitable for transmitting liquids intended for human or animal consumption.

712.34 Non-metallic Pipe, Rigid Non-metallic pipe shall be Schedule 40 polyvinylchloride (PVC) that meets the requirement of ASTM D1785. Fittings shall be of the same material.

712.341 Metallic Pipe Metallic pipe shall be ANSI, Standard B36.10, Schedule 40 steel pipe conforming to the requirements of ASTM A53 Types E or S, Grade B. End plates shall be steel conforming to ASTM A36/A36M.

Both the sleeve and end plates shall be hot dip galvanized. Pipe sleeve splices shall be welded splices with full penetration weld before galvanizing.

712.35 Epoxy Resin Epoxy resin for grouting or sealing shall consist of a mineral filled thixotropic, flexible epoxy resin having a pot life of approximately one hour at 10°C [50°F]. The grout shall be an approved product suitable for cementing steel dowels into the preformed holes of curb inlets and adjacent curbing. The sealant shall be an approved product, light gray in color and suitable for coating the surface.

712.36 Bituminous Curb The asphalt cement for bituminous curb shall be of the grade required for the wearing course, or shall be Viscosity Grade AC-20 meeting the current requirements of Subsection 702.01 Asphalt Cement. The aggregate shall conform to the requirements of Subsection 703.07. The coarse aggregate portion retained on the 2.36 mm [No. 8] sieve may be either crushed rock or crushed gravel.

The mineral constituents of the bituminous mixture shall be sized and graded and combined in a composite blend that will produce a stable durable curbing with an acceptable texture.

Bituminous material for curb shall meet the requirements of Section 403 - Hot Bituminous Pavement.

712.37 Precast Concrete Slab Portland cement concrete for precast slabs shall meet the requirements of Section 502 - Structural Concrete, Class A.

The slabs shall be precast to the dimension shown on the plans and cross section and in accordance with the Standard Detail plans for Concrete Sidewalk Slab. The surface shall be finished with a float finish in accordance with Subsection 502.14(c). Lift devices of sufficient strength to hold the slab while suspended from cables shall be cast into the top or back of the slab.

712.38 Stone Slab Stone slabs shall be of granite from an acceptable source, hard, durable, predominantly gray in color, free from seams which impair the structural integrity and be of smooth splitting character. Natural color variations characteristic of the deposit will be permitted. Exposed surfaces shall be free from drill holes or indications of drill holes. The granite slabs in any one section of backslope must be all the same finish.

The granite slabs shall be scabble dressed or sawed to an approximately true plane having no projections or depressions over 13 mm [½ in] under a 600 mm [2 ft] straightedge or over 25 mm [1 in] under a 1200 mm [4 ft] straightedge. The arris at the intersection of the top surface and exposed front face shall be pitched so that the arris line is uniform throughout the length of the installed slabs. The sides shall be square to the exposed face unless the slabs are to be set

on a radius or other special condition which requires that the joints be cut to fit, but in any case shall be so finished that when the stones are placed side by side no space more than 20 mm [3/4 in] shall show in the joint for the full exposed height.

Liftpin holes in all sides will be allowed except on the exposed face.

SECTION 717
ROADSIDE IMPROVEMENT MATERIAL

717.03 C. Method #3 - Roadside Mixture #3 Change the seed proportions to the following:

Crown Vetch	25%
Perennial Lupine	25%
Red Clover	12.5%
Annual Rye	37.5%

717.05 Mulch Binder Change the third sentence to read as follows:

"Paper fiber mulch may be used as a binder at the rate of 2.3 kg/unit [5 lb/unit]."

SECTION 720
STRUCTURAL SUPPORTS FOR HIGHWAY SIGNS, LUMINAIRES, AND TRAFFIC SIGNALS

720.08 U-Channel Posts Change the first sentence from "…, U-Channel posts…" to "…, Rib Back U-Channel posts…"

SECTION 722
GEOTEXTILES

722.01 Stabilization/Reinforcement Geotextile Add the following to note #3; "The strengths specified in the columns labeled"<50%" and "≥ 50%" refer to the elongation at which the geotextile material was tested. For example; if a fabric is tested at 15% elongation then it must meet or exceed the minimum strength shown in the "<50%" column. Submittals must include the percent elongation at which the material was tested."

722.02 Drainage Geotextile Add the following to note #3; "The strengths specified in the columns labeled"<50%" and "≥ 50%" refer to the elongation at which the geotextile material was tested. For example; if a fabric is tested at 15% elongation then it must meet or exceed the minimum strength shown in the "<50%" column. Submittals must include the percent elongation at which the material was tested."

722.01 Erosion Control Geotextile Add the following note to Elongation in the Mechanical Property Table; "The strengths specified in the columns labeled"<50%" and "≥ 50%" refer to the elongation at which the geotextile material was tested. For example; if a fabric is tested at 15% elongation then it must meet or exceed the minimum strength shown in the "<50%" column. Submittals must include the percent elongation at which the material was tested."

APPENDIX A TO DIVISION 100

SECTION 1 - BIDDING PROVISIONS

A. Federally Required Certifications By signing and delivering a Bid, the Bidder certifies as provided in all certifications set forth in this Appendix A - Federal Contract Provisions Supplement including:

- Certification Regarding No Kickbacks to Procure Contract as provided on this page 1 below.
- Certification Regarding Non-collusion as provided on page 1 below.
- Certification Regarding Non-segregated Facilities as provided by FHWA Form 1273, section III set forth on page 21 below.
- "Certification Regarding Debarment, Suspension, Ineligibility and Voluntary Exclusion" as provided by FHWA Form 1273, section XI set forth on page 32 below.
- "Certification Regarding Use of Contract Funds for Lobbying" as provided by FHWA Form 1273, section XII set forth on page 35 below.

Unless otherwise provided below, the term "Bidder", for the purposes of these certifications, includes the Bidder, its principals, and the person(s) signing the Bid. Upon execution of the Contract, the Bidder (then called the Contractor) will again make all the certifications indicated in this paragraph above. Upon execution of the Contract, the Bidder (then called the Contractor) will again make all the certifications indicated in this paragraph above.

CERTIFICATION REGARDING NO KICKBACKS TO PROCURE CONTRACT Except expressly stated by the Bidder on sheets submitted with the Bid (if any), the Bidder hereby certifies, to the best of its knowledge and belief, that it has not:

(A) employed or retained for a commission, percentage, brokerage, contingent fee, or other consideration, any firm or person (other then a bona fide employee working solely for me) to solicit or secure this contract;

(B) agreed, as an express or implied condition for obtaining this contract, to employ or retain the services of any firm or person in connection with carrying out the contract, or;

C) paid, or agreed to pay, to any firm, organization, or person (other than a bona fide employee working solely for me) any fee, contribution, donation, or consideration of any kind for, or in connection with, procuring or carrying out the contract;

By signing and submitting a Bid, the Bidder acknowledges that this certification is to be furnished to the Maine Department of Transportation and the Federal Highway Administration, U.S. Department of Transportation in connection with this contract in anticipation of federal aid highway funds and is subject to applicable state and federal laws, both criminal and civil.

CERTIFICATION REGARDING NONCOLLUSION Under penalty of perjury as provided by federal law (28 U.S.C. §1746), the Bidder hereby certifies, to the best of its knowledge and belief, that:

the Bidder has not, either directly or indirectly, entered into any agreement, participated in any collusion, or otherwise taken any action in restraint of competitive bidding in connection with the Contract.

For a related provisions, see Section 102.7.2 (C) of the Standard Specifications - "Effects of Signing and Delivery of Bids" - "Certifications", Section 3 of this Appendix A entitled "Other Federal Requirements" including section XI - "Certification Regarding Debarment, Suspension, Ineligibility, and Voluntary Exclusion" and section XII. - "Certification Regarding Use of Contract Funds for Lobbying."

****

B. Bid Rigging Hotline To report bid rigging activities call: **1-800-424-9071**

The U.S. Department of Transportation (DOT) operates the above toll-free "hotline" Monday through Friday, 8:00 a.m. to 5:00 p.m., eastern time. Anyone with knowledge of possible bid rigging, bidder collusion, or other fraudulent activities should use the "hotline" to report such activities.

The "hotline" is part of the DOT's continuing effort to identify and investigate highway construction contract fraud and abuse and is operated under the direction of the DOT Inspector General. All information will be treated confidentially and caller anonymity will be respected.

****

SECTION 2 - FEDERAL EEO AND CIVIL RIGHTS REQUIREMENTS

Unless expressly otherwise provided in the Bid Documents, the provisions contained in this Section 2 of this "Federal Contract Provisions Supplement" are hereby incorporated into the Bid Documents and Contract.

A. Nondiscrimination & Civil Rights - Title VI The Contractor and its subcontractors shall not discriminate on the basis of race, color, national origin, or sex in the performance of this Contract. The Contractor shall carry out applicable requirements of 49 CFR Part 26 in the award and administration of DOT assisted contracts. Failure by the Contractor to carry out these requirements is a material breach of this contract, which may result in the termination of this contract or such other remedy as the Department deems appropriate. The Contractor and subcontractors shall comply with Title VI of the Civil Rights Act of 1964, as amended, and with all State of Maine and other Federal Civil Rights laws.

For related provisions, see Subsection B - "Nondiscrimination and Affirmative Action - Executive Order 11246" of this Section 2 and Section 3 - Other Federal Requirements of this "Federal Contract Provisions Supplement" including section II - "Nondiscrimination" of the "Required Contract Provisions, Federal Aid Construction Contracts", FHWA-1273.

B. Nondiscrimination and Affirmative Action - Executive Order 11246 Pursuant to Executive Order 11246, which was issued by President Johnson in 1965 and amended in 1967 and 1978, this Contract provides as follows.

The Contractor shall take specific affirmative actions to ensure equal employment opportunity. The evaluation of the Contractor's compliance with these specifications shall be based upon its efforts to achieve maximum results from its actions. The Contractor shall

document these efforts fully, and shall implement affirmative action steps at least as extensive as the following:

1. Ensure and maintain a working environment free of harassment, intimidations, and coercion at all sites, and in all facilities at which the Contractor's employees are assigned to work. The Contractor, where possible, will assign two or more women to each construction project. The Contractor shall specifically ensure that all forepersons, superintendents, and other on-site supervisory personnel are aware of and carry out the Contractor's obligation to maintain such a working environment, with specific attention to minority or female individuals working at such sites or in such facilities.

2. Establish and maintain a current list of minority and female recruitment sources, provide written notification to minority and female recruitment sources and to community organizations when the Contractor or its union have employment opportunities available, and to maintain a record of the organization's responses.

3. Maintain a current file of the names, addresses and telephone numbers of each minority and female off-the-street applicant and minority or female referral from a union, a recruitment source or community organization and of what action was taken with respect to each such individual. If such individual was sent to the union hiring hall for referral and was not referred back to the Contractor by the union or, if referred, not employed by the Contractor, this shall be documented in the file with the reason therefore, along with whatever additional actions the Contractor may have taken.

4. Provide immediate written notification to the Department's Civil Rights Office when the union or unions with which the Contractor has a collective bargaining agreement has not referred to the Contractor a minority person or woman sent by the Contractor, or when the Contractor has other information that the union referral process has impeded the Design-Builder's efforts to meet its obligations.

5. Develop on-the-job training opportunities and/or participate in training programs for the area which expressly include minorities and women, including upgrading programs and apprenticeship and trainee programs relevant to the Contractor's employment needs, especially those programs funded or approved by the Department of Labor. The Contractor shall provide notice of these programs to the sources compiled under B above.

6. Disseminate the Contractor's EEO policy by providing notice of the policy to unions and training programs and requesting their cooperation in assisting the Contractor in meeting its EEO obligation; by including it in any policy manual and collective bargaining agreement; by publicizing it in the company newspaper, annual report, etc.; by specific review of the policy with all management personnel and with all minority and female employees at least once a year; and by posting the company EEO policy on bulletin boards accessible to all employees at each location where construction work is performed.

7. Review, at least annually, the company's EEO policy and affirmative action obligations under these specifications with all employees having any responsibility for hiring, assignment, layoff, termination, or other employment decisions including specific review

of these items with on-site supervisory personnel such as Superintendents, General Forepersons, etc., prior to the initiation of construction work at any job site. A written record shall be made and maintained identifying the time and place of these meetings, persons attending, subject matter discussed, and disposition of the subject matter.

8. Disseminate the Contractor's EEO policy externally by including it in any advertising in the news media, specifically including minority and female news media, and providing written notification to and discussing the Contractor's EEO policy with other Contractor's and Subcontractors with whom the Contractor does or anticipates doing business.

9. Direct its recruitment efforts, both orally and written to minority, female and community organizations, to schools with minority and female students and to minority and female recruitment and training organizations serving the Contractor's recruitment area and employment needs. Not later that one month prior to the date for the acceptance of applications for apprenticeship or other training by any recruitment source, the Contractor shall send written notification to organizations such as the above describing the openings, screenings, procedures, and test to be used in the selection process.

10. Encourage present minority and female employees to recruit other minority persons and women and, where reasonable, provide after school, summer and vacation employment to minority and female youth, both on the site and in other areas of a Contractor's workforce.

11. Validate all tests and other selection requirements.

12. Conduct, at least annually, an inventory and evaluation at least of all minority and female personnel for promotional opportunities and encourage these employees to seek or to prepare for, through appropriate training, etc., such opportunities.

13. Ensure that seniority practices, job classifications, work assignments and other personnel practices, do not have a discriminatory effect by continually monitoring all personnel and employment related activities to ensure that the EEO policy and the Contractor's obligations under these specifications are being carried out.

14. Ensure that all facilities and company activities are non segregated except that separate or single-user toilet and necessary changing facilities shall be provided to assure privacy between the sexes.

15. Document and maintain a record of all solicitations of offers for subcontracts from minority and female construction Contractor's and suppliers, including circulation of solicitations to minority and female Contractor associations and other business associations.

16. Conduct a review, at least annually, of all supervisors' adherence to and performance under the Contractor's EEO policies and affirmative action obligations.

C. Goals for Employment of Women and Minorities Per Executive Order 11246, craft tradesperson goals are 6.9% women and .5% minorities employed. However, goals may be adjusted upward at the mutual agreement of the Contractor and the Department. Calculation of these percentages shall not include On-the-Job Training Program trainees, and shall not include clerical or field clerk position employees.

For a more complete presentation of requirements for such Goals, see the federally required document "Goals for Employment of Females and Minorities" set forth in the next 6 pages below.

****

Start of GOALS FOR EMPLOYMENT OF FEMALES AND MINORITIES
Federally Required Contract Document

§60-4.2 Solicitations

(d) The following notice shall be included in, and shall be part of, all solicitations for offers and bids on all Federal and federally assisted construction contracts or subcontracts in excess of $10,000 to be performed in geographical areas designated by the Director pursuant to §60-4.6 of this part (see 41 CFR 60-4.2(a)):

Notice of Requirement for Affirmative Action to Ensure Equal Opportunity (Executive Order 11246)

1. The Offeror's or bidder's attention is called to the "Equal Opportunity Clause" and the "Standard Federal Equal Employment Specifications" set forth herein.

2. The goals and timetables for minority and female participation, expressed in percentage terms for the Contractor's aggregate work force in each trade on all construction work in the covered area, are as follows:

Goals for female participation in each trade 6.9%

Goals for minority participation for each trade
Maine
001 Bangor, ME 0.8%
Non-SMSA Counties (Aroostook, Hancock, Penobscot, Piscataquis, Waldo, Washington)

002 Portland-Lewiston, ME
SMSA Counties: 4243 Lewiston-Auburn, ME 0.5%
(Androscoggin)

6403 Portland, ME 0.6%
(Cumberland, Sagadahoc)

Non-SMSA Counties: 0.5%
(Franklin, Kennebec, Knox, Lincoln, Oxford, Somerset, York)

These goals are applicable to all the Contractor's construction work (whether or not it is Federal or federally assisted) performed in the covered area. If the contractor performs construction work in a geographical area located outside of the covered area, it shall apply the goals established for such geographical area where the work is actually performed. With regard to this second area, the contractor also is subject to the goals for both its federally involved and non federally involved construction.

The contractor's compliance with the Executive Order and the regulations in 41 CFR Part 60-4 shall be based on its implementation of the Equal Opportunity Clause, specific affirmative action obligations required by the specifications set forth in 41 CFR 60-4.3(a), and its efforts to meet the goals. The hours of minority and female employment and training must be substantially uniform throughout the length of the contract, and in each trade, and the contractor shall make a good faith effort to employ minorities and women evenly on each of its projects. The transfer of minority or female employees or trainees from Contractor to Contractor or from project to project for the sole purpose of meeting the Contractor's goals shall be in violation of the contract, the Executive Order and the regulations in 41 CFR Part 60-4. Compliance with the goals will be measured against the total work hours performed.

3. The Contractor shall provide written notification to the Director of the Office of Federal Contract Compliance Programs within 10 working days of award of any construction subcontract in excess of $10,000 at any tier for construction work under the contract resulting from this solicitation. The notification shall list the name, address and telephone number of the subcontractor, employer identification number of the subcontractor, estimated dollar amount of the subcontract; estimated started and completion dates of the subcontract; and the geographical area in which the subcontract is to be performed.

4. As used in this Notice, and in the Contract resulting from this solicitation, the "covered area" is (insert description of the geographical areas where the contract is to be performed giving the state, county and city, if any).

STANDARD FEDERAL EQUAL EMPLOYMENT OPPORTUNITY CONSTRUCTION CONTRACT SPECIFICATIONS (EXECUTIVE ORDER 11246)

1. As used in these specifications:

   a. "Covered area" means the geographical area described in the solicitation from which this contract resulted;

   b. "Director" means Director, Office of Federal Contract Compliance Programs, United States Department of Labor, or any person to whom the Director delegates authority;

   c. "Employer identification number" means the Federal Social Security number used on the Employer's Quarterly Federal Tax Return, U.S. Treasury Department form 941;

   d. "Minority" includes:
      (i) Black (all persons having origins in any of the Black African racial groups not of Hispanic origin);

(ii) Hispanic (all persons of Mexican, Puerto Rican, Cuban, Central or South American or other Spanish Culture or origin, regardless of race);
(iii) Asian and Pacific Islander (all persons having origins in any of the original peoples of the Far East, Southeast Asia, the Indian Subcontinent, or the Pacific Islands); and
(iv) American Indian or Alaskan Native (all persons having origins in any of the original peoples of the North America and maintaining identifiable tribal affiliations through membership and participation or community identification).

2. Whenever the Contractor, or any subcontractor at any tier, subcontracts a portion of the work involving any construction trade, it shall physically include in each subcontract in excess of $10,000 the provisions of these specifications and the Notice which contains the applicable goals for minority and female participation and which is set forth in the solicitations from which this contract resulted.

3. If the contractor, is participating (pursuant to 41 CFR 60-4.5) in a Hometown Plan approved by the U.S. Department of Labor in the covered area either individually or through an association, its affirmative action obligations on all work in the Plan area (including goals and timetables) shall be in accordance with that Plan for those trades which have unions participating in the Plan. Contractors must be able to demonstrate their participation in and compliance with the provisions of any such Hometown Plan. Each Contractor or Subcontractor participating in an approved Plan is individually required to comply with its obligations under the EEO clause, and to make a good faith effort to achieve each goal under the Plan in each trade in which it has employees. The overall good faith performance by other Contractors for Subcontractors toward a goal in an approved Plan does not excuse any covered Contractor's or Subcontractor's failure to take good faith efforts to achieve the Plan goals and timetables.

4. The Contractor shall implement the specific affirmative action standards provided in paragraphs 7 a. through p. of these specifications. The goals set forth in the solicitation from which this contract resulted are expressed as percentages of the total hours of employment and training of minority and female utilization the Contractor should reasonably be able to achieve in each construction trade in which it has employees in contractors performing construction work in geographical areas where they do not have a Federal or federally assisted construction contract shall apply the minority and female goals established for the geographical areas where the work is being performed. Goals are published periodically in the Federal Register in notice form and such notices may be obtained from any Office of Federal Contract Compliance Programs office or from Federal procurement contracting officers. The Contractor is expected to make substantially uniform progress in meeting its goals in each craft during the period specific.

5. Neither the provisions of any collective bargaining agreement, nor the failure by a union with whom the Contractor has a collective bargaining agreement, to refer either minorities or women shall excuse the Contractor's obligations under these specifications, Executive Order 11246, or the regulations promulgated pursuant, thereto.

6. In order for the non working training hours of apprentices and trainees to be counted in meeting the goals, such apprentices and trainees must be employed by the Contractor during the training period, and the Contractor must have made a commitment to employ the

apprentices and trainees at the completion of their training, subject to the availability of employment opportunities. Trainees must be trained pursuant to training programs approved by the U.S. Department of Labor.

7. The Contractor shall take specific affirmative actions to ensure equal employment opportunity. The evaluation of the Contractor's compliance with these specifications shall be based upon its effort to achieve maximum results from its actions. The Contractor shall document these efforts fully, and shall implement affirmative action steps at least as expensive as the following:

   a. Ensure and maintain a working environment free of harassment, intimidation, coercion at all sites, and in all facilities at which the Contractor's employees are assigned to work. The Contractor, when possible, will assign two or more women to each construction project. The Contractor shall specifically ensure that all foremen, superintendents, and other on-site supervisory personnel are aware of and carry out the Contractor's obligation to maintain such a working environment, with specific attention to minority or female individuals working at such sites or in such facilities.

   b. Establish and maintain a current list of minority and female recruitment sources provide written notification to minority and female recruitment sources and to community organizations when the Contractor or its unions have employment opportunities available, and maintain a record of the organization's responses.

   c. Maintain a current file of the names, addresses and telephone numbers of each minority and female off-the-street applicant and minority or female referral from a union, a recruitment sources or community organization and of what action was taken with respect to each such individual. If such individual was sent to the union hiring hall for referral and was not referred back to the Contractor by the union or, if referred, not employed by the Contractor, this shall be documented in the file with the reason therefore, along with whatever additional actions the Contractor may have taken.

   d. Provide immediate written notification to the Director when the union or unions with which the Contractor has a collective bargaining agreement has not referred to the Contractor a minority person or woman sent by the Contractor, or when the Contractor has other information that the union referral process has impeded the Contractor's efforts to meet its obligations.

   e. Develop on-the-job training opportunities and/or participate in training programs for the area which expressly include minorities and women, including upgrading programs and apprenticeship and trainee programs relevant to the Contractor's employment needs, especially those programs funded or approved by the Department of Labor. The Contractor shall provide notice of these programs to the sources complied under 7b above.

   f. Disseminate the Contractor's EEO policy by providing notice of the policy to unions and training programs and requesting their cooperation in assisting the Contractor in meeting its EEO obligations; by including in any policy manual and collective bargaining agreement; by publicizing it in the company newspaper, annual report, etc.; by specific

review of the policy with all management personnel and with all minority and female employees at least once a year; and by posting the company EEO policy on bulletin boards accessible to all employees at each location where construction work is performed.

g. Review, at least annually, the company's EEO policy and affirmative action obligations under these specifications with all employees having any responsibility for hiring, assignment, layoff, termination or other employment decisions including specific review of these items with on-site supervisory personnel such as Superintendents, General Foremen, etc., prior to the initiation of construction work at any job site. A written record shall be made and maintained identifying the time and place of these meetings, persons attending, subject matter discussed, and disposition of the subject matter.

h. Disseminate the Contractor's EEO policy externally by including it in any advertising in the news media, specifically including minority and female news media, and providing written notification to and discussing the Contractor's EEO policy with other Contractors and Subcontractors with whom the Contractor does or anticipates doing business.

i. Direct its recruitment, efforts, both oral and written, to minority, female and community organizations, to schools with minority and female students and to minority and female recruitment and training organizations serving the Contractor's recruitment area and employment needs. Not later than one month other training by any recruitment source, the Contractor shall send written notification to organizations such as the above, describing prior to the date for the acceptance of applications for apprenticeship or the openings, screening procedures, and tests to be used in the selection process.

j. Encourage present minority and female employees to recruit other minority persons and women and, where reasonable, provide after school, summer and vacation employment to minority and female youth both on site and in other areas of a Contractor's work force.

k. Validate all tests and other selection requirements where there is an obligation to do so under 41 CFR Part 60-3.

l. Conduct, at least annually, an inventory and evaluation at least of all minority and female personnel for promotional opportunities and encourage these employees to seek or to prepare for, through appropriate training, etc., such opportunities.

m. Ensure that seniority practices, job classifications, work assignments and other personnel practices, do not have a discriminatory effect by continually monitoring all personnel and employment related activities to ensure that the EEO policy and the Contractor's obligations under these specifications are being carried out.

n. Ensure that all facilities and company activities are non segregated except that separate or single-user toilet and necessary changing facilities shall be provided to assure privacy between the sexes.

o. Document and maintain a record of all solicitations of offers for subcontracts from minority and female construction contractors and suppliers, including circulation of

solicitation to minority and female contractor associations and other business associations.

p. Conduct a review, at least annually, of all supervisor's adherence to and performance under the Contractor's EEO policies and affirmative action obligations.

8. Contractors are encouraged to participate in voluntary associations which assist in fulfilling one or more of their affirmative action obligations (7 a through p.). The efforts of a contractor association, joint contractor-union, contractor-community, or other similar group of which the contractor is a member and participant, may be asserted as fulfilling any one or more of its obligations under 7 a through p. of these specifications provided that the contractor actively participates in the group, makes every effort to assure that the group has a positive impact on the employment of minorities and women in the industry, ensures that the concrete benefits of the program and reflected in the Contractor's minority and female work force participation, makes a good faith effort to meet its individual goals and timetables, and can provide access to documentation which demonstrates the effectiveness of actions take on behalf of the Contractor. The obligation to comply, however, is the Contractor's and failure of such a group to fulfill an obligation shall not be a defense for the Contractor's noncompliance.

9. A single goal for minorities and a separate single goal for women have been established. The Contractor, however, is required to provide equal employment opportunity and to take affirmative action for all minority groups, both make and female, and all women, both minority and non-minority. Consequently, the Contractor may be in violation of the Executive Order if a particular group is employed in a substantially disparate manner (for example, specific minority group of women is underutilized.)

10. The Contractor shall not use the goals and timetables or affirmative action even through the Contractor has achieved its goals for women generally, the Contractor may be in violation of the Executive Order if standards to discriminate against any person because of race, color, religion, sex, or national origin.

11. The Contractor shall not enter into any Subcontract with any person or firm debarred from Government contracts pursuant to Executive Order 11246.

12. The Contractor shall carry out such sanctions and penalties for violation of these specifications and of the Equal Opportunity Clause, including suspension, termination and cancellation of existing subcontracts as may be imposed or ordered pursuant to Executive Order 11246, as amended, and its implementation regulations by the Office of Federal Contract Compliance Programs. Any Contractor who fails to carry out such sanctions and penalties shall be in violation of these specifications and Executive Order 11246, as amended.

13. The Contractor, in fulfilling its obligations under these specifications, shall implement specific affirmative action steps, at least as extensive as those standards prescribed in paragraph 7 of these specifications, so as to achieve maximum results from its efforts to ensure equal employment opportunity. If the Contractor fails to comply with the

requirements of the Executive Order, the implementing regulations, or these specifications, the Director shall proceed in accordance with 41 CFR 60-4.6.

14. The Contractor shall designate a responsible official to monitor all employment related activity to ensure that the company EEO policy is being carried out, to submit reports relating to the provisions hereof as may be required by the Government and to keep records. Records shall at least include for each employee the name, address, telephone numbers, construction trade, union affiliation if any, employee identification number when assigned, social security number, race, sex, status (e.g. mechanic, apprentice, trainee, helper, or laborer), dates of changes in status, hours worked per week in the indicated trade, rate of pay, and location sat which the work was performed. Records be maintained in an easily understandable and retrievable form; however, to the degree that existing records satisfy this requirement, contractors shall not be required to maintain separate records.

15. Nothing herein provided shall be construed as a limitation upon the application of other laws which establish different standards of compliance or upon the application of requirements for the hiring of local or other area residents (e.g., those under the Public Works Employment Act of 1977 and the Community Development Block Grant Program).

End of GOALS FOR EMPLOYMENT OF FEMALES AND MINORITIES
Federally Required Contract Document

****

D. Disadvantaged Business Enterprise (DBE) Requirements The Department has established an annual Disadvantaged Business Enterprise goal to be achieved through race neutral means. This goal will adjusted periodically and will be provided by Supplemental Provision. The Contractor shall comply with all provisions of this section regarding DBE participation and the Department's latest version of the Disadvantaged Business Enterprise Program Manual, said Manual being incorporated herein by reference. In the case of conflict between this Contract and said Manual, this Contract shall control. The Department reserves the right to adjust DBE goals on a project-by-project basis by addendum.

Policy. It is the Department's policy that DBEs as defined in 23 CFR Part 26 and referenced in the Transportation Equity Act for 21st Century of 1998, as amended from the Surface Transportation Uniform Relocation Assistance Act of 1987, and the Intermeddle Surface Transportation Efficiency Act of 1991. The intent hereto remains to provide the maximum opportunity for DBEs to participate in the performance of contracts financed in whole or in part with federal funds.

The Department and its Contractors shall not discriminate on the basis of race, color, national origin, ancestry, sex, age, or disability in the award and performance of DOT assisted contracts.

Disadvantaged Business Enterprises are those so certified by the Maine Department of Transportation Civil Rights Office prior to bid opening date.

The Department has determined that elements of a good faith effort to meet the contract goal include but are not limited to the following:

1. Whether the Contractor advertised in general circulation, trade association, and minority/women's-focus media concerning the subcontracting opportunities;

2. Whether the Contractor provided written notice to a reasonable number of specific DBEs that their interest in the contract is being solicited;

3. Whether the Contractor followed up on initial solicitations of interest by contacting DBEs to determine with certainty whether the DBEs were interested;

4. Whether the Contractor selected portions of the work to be performed by DBEs in order to increase the likelihood of meeting the DBE goals;

5. Whether the Contractor provided interested DBEs with adequate information about the plans, specification and requirements of the contract;

6. Whether the Contractor negotiated in good faith with interested DBEs, not rejecting the DBE as unqualified without sound reasons based on a thorough investigation of their capabilities;

7. Whether the Contractor made efforts to assist interested DBEs with other appropriate technical/financial assistance required by the Department or Contractor;

8. Whether the Contractor effectively used the services of available minority/women's community organizations, minority/women's business assistance offices; and other organizations that provide assistance in the recruitment and placement of DBEs.

Substitutions of DBEs. The following may be acceptable reasons for Civil Rights Office approval of such a change order:

- The DBE defaults, voluntarily removes itself or is over-extended;
- The Department deletes portions of the work to by performed by the DBE.

It is not intended that the ability to negotiate a more advantageous contract with another certified DBE be considered a valid basis for such a change in DBE utilization once the DBE Bid Submission review has been passed. Any requests to alter the DBE commitment must be in writing and included with the change order.

Failure to carry out terms of this Standard Specification shall be treated as a violation of this contract and will result in contract sanctions which may include withholding of partial payments totaling the creditable dollars amount which would have been paid for said DBE participation, termination of this contract or other measures which may affect the ability of the Contractor to obtain Department contracts.

Copies of the Maine Department of Transportation's DBE Program may be obtained from:

Maine Department of Transportation
Civil Rights Office
#16 State House Station
Augusta, Maine 04333-0016
tel. (207) 624-3519

Quarterly Reporting Requirement. The Contractor must submit Semi-annual reports of actual dollars paid to Disadvantaged Business Enterprises (DBE's) on this Project to the MDOT Civil Rights Office by the end of the third week of April and October for the period covering the preceding six months considered Federal Fiscal Year periods. The reports will be submitted directly to the Civil Rights Office on the form provided in the latest version of the DBE Program Manual. Failure to submit the report by the deadline may result in a withholding of approval of partial payment estimates by the Department.

SECTION 3 - OTHER FEDERAL REQUIREMENTS

Unless expressly otherwise provided in the Bid Documents, the provisions contained in this Section 3 of this "Federal Contract Provisions Supplement" are hereby incorporated into the Bid Documents and Contract.

A. Buy America

If the cost of products purchased for permanent use in this project which are manufactured of steel, iron or the application of any coating to products of these materials exceeds 0.1 percent of the contract amount, or $2,500.00, whichever is greater, the products shall have been manufactured and the coating applied in the United States. The coating materials are not subject to this clause, only the application of the coating. In computing that amount, only the cost of the product and coating application cost will be included.

Ore, for the manufacture of steel or iron, may be from outside the United States; however, all other manufacturing processes of steel or iron must be in the United States to qualify as having been manufactured in the United States.

United States includes the 50 United States and any place subject to the jurisdiction thereof.

Products of steel include, but are not limited to, such products as structural steel, piles, guardrail, steel culverts, reinforcing steel, structural plate and steel supports for signs, luminaries and signals.

Products of iron include, but are not limited to, such products as cast iron grates.

Application of coatings include, but are not limited to, such applications as epoxy, galvanized and paint.

To assure compliance with this section, the Contractor shall submit a certification letter on its letterhead to the Department stating the following:

> "This is to certify that products made of steel, iron or the application of any coating to products of these materials whose costs are in excess of $2,500.00 or 0.1 percent of the original contract amount, whichever is greater, were manufactured and the coating, if one was required, was applied in the United States."

B. Materials

a. Convict Produced Materials References: 23 U.S.C. 114(b)(2), 23 CFR 635.417

Applicability: FHWA's prohibition against the use of convict material only applies to Federal-aid highways. Materials produced after July 1, 1991, by convict labor may only be incorporated in a Federal-aid highway construction project if: 1) such materials have been produced by convicts who are on parole, supervised release, or probation from a prison; or 2) such material has been produced in a qualified prison facility, e.g., prison industry, with the amount produced during any 12-month period, for use in Federal-aid projects, not exceeding the amount produced, for such use, during the 12-month period ending July 1, 1987.

Materials obtained from prison facilities (e.g., prison industries) are subject to the same requirements for Federal-aid participation that are imposed upon materials acquired from other sources. Materials manufactured or produced by convict labor will be given no preferential treatment.

The preferred method of obtaining materials for a project is through normal contracting procedures which require the contractor to furnish all materials to be incorporated in the work. The contractor selects the source, public or private, from which the materials are to be obtained (23 CFR 635.407). Prison industries are prohibited from bidding on projects directly (23 CFR 635.112e), but may act as material supplier to construction contractors.

Prison materials may also be approved as State-furnished material. However, since public agencies may not bid in competition with private firms, direct acquisition of materials from a prison industry for use as State-furnished material is subject to a public interest finding with the Division Administrator's concurrence (23 CFR 635.407d). Selection of materials produced by convict labor as State-furnished materials for mandatory use should be cleared prior to the submittal of the Plans Specifications & Estimates (PS&E).

b. Patented/Proprietary Products References: 23 U.S.C. 112, 23 CFR 635.411

FHWA will not participate, directly or indirectly, in payment for any premium or royalty on any patented or proprietary material, specification, or process specifically set forth in the plans and specifications for a project, unless:

- the item is purchased or obtained through competitive bidding with equally suitable unpatented items,
- the STA certifies either that the proprietary or patented item is essential for synchronization with the existing highway facilities or that no equally suitable alternative exists, or
- the item is used for research or for a special type of construction on relatively short sections of road for experimental purposes. States should follow FHWA's procedures for "Construction Projects Incorporating Experimental Features" (expermnt.htm) for the submittal of work plans and evaluations.

The primary purpose of the policy is to have competition in selection of materials and allow for development of new materials and products. The policy further permits materials and products that are judged equal may be bid under generic specifications. If only patented or proprietary products are acceptable, they shall be bid as alternatives with all, or at least a

reasonable number of, acceptable materials or products listed; and the Division Administrator may approve a single source if it can be found that its utilization is in the public interest.

Trade names are generally the key to identifying patented or proprietary materials. Trade name examples include 3M, Corten, etc. Generally, products identified by their brand or trade name are not to be specified without an "or equal" phrase, and, if trade names are used, all, or at least a reasonable number of acceptable "equal" materials or products should be listed. The licensing of several suppliers to produce a product does not change the fact that it is a single product and should not be specified to the exclusion of other equally suitable products.

c. State Preference References: 23 U.S.C. 112, 23 CFR 635.409

Materials produced within Maine shall not be favored to the exclusion of comparable materials produced outside of Maine. State preference clauses give particular advantage to the designated source and thus restrict competition. Therefore, State preference provisions shall not be used on any Federal-aid construction projects.

This policy also applies to State preference actions against materials of foreign origin, except as otherwise permitted by Federal law. Thus, States cannot give preference to in-State material sources over foreign material sources. Under the Buy America provisions, the States are permitted to expand the Buy America restrictions provided that the STA is legally authorized under State law to impose more stringent requirements.

d. State Owned/Furnished/Designated Materials References: 23 U.S.C. 112, 23 CFR 635.407

Current FHWA policy requires that the contractor must furnish all materials to be incorporated in the work, and the contractor shall be permitted to select the sources from which the materials are to be obtained. Exceptions to this requirement may be made when there is a definite finding, by MDOT and concurred in by Federal Highway Administration's (FHWA) Division Administrator, that it is in the public interest to require the contractor to use materials furnished by the MDOT or from sources designated by MDOT. The exception policy can best be understood by separating State-furnished materials into the categories of manufactured materials and local natural materials.

Manufactured Materials When the use of State-furnished manufactured materials is approved based on a public interest finding, such use must be made mandatory. The optional use of State-furnished manufactured materials is in violation of our policy prohibiting public agencies from competing with private firms. Manufactured materials to be furnished by MDOT must be acquired through competitive bidding, unless there is a public interest finding for another method, and concurred in by FHWA's Division Administrator.

Local Natural Materials When MDOT owns or controls a local natural materials source such as a borrow pit or a stockpile of salvaged pavement material, etc., the materials may be designated for either optional or mandatory use; however, mandatory use will require a public interest finding (PIF) and FHWA's Division Administrator's concurrence.

In order to permit prospective bidders to properly prepare their bids, the location, cost, and any conditions to be met for obtaining materials that are made available to the contractor shall be stated in the bidding documents.

Mandatory Disposal Sites Normally, the disposal site for surplus excavated materials is to be of the contractor's choosing; although, an optional site(s) may be shown in the contract provisions. A mandatory site shall be specified when there is a finding by MDOT, with the concurrence of the Division Administrator, that such placement is the most economical or that the environment would be substantially enhanced without excessive cost. Discussion of the mandatory use of a disposal site in the environmental document may serve as the basis for the public interest finding.

Summarizing FHWA policy for the mandatory use of borrow or disposal sites:

- mandatory use of either requires a public interest finding and FHWA's Division Administrator's concurrence,
- mandatory use of either may be based on environmental consideration where the environment will be substantially enhanced without excessive additional cost, and
- where the use is based on environmental considerations, the discussion in the environmental document may be used as the basis for the public interest finding.

Factors to justify a public interest finding should include such items as cost effectiveness, system integrity, and local shortages of material.

C. Standard FHWA Contract Provisions - FHWA 1273

Unless expressly otherwise provided in the Bid Documents, the following "Required Contract Provisions, Federal Aid Construction Contracts", FHWA-1273, are hereby incorporated into the Bid Documents and Contract.

****

Start of FHWA 1273 REQUIRED CONTRACT PROVISIONS
FEDERAL-AID CONSTRUCTION CONTRACTS(As revised through March 10, 1994)

I. GENERAL

1. These contract provisions shall apply to all work performed on the contract by the contractor's own organization and with the assistance of workers under the contractor's immediate superintendence and to all work performed on the contract by piecework, station work, or by subcontract.

2. Except as otherwise provided for in each section, the contractor shall insert in each subcontract all of the stipulations contained in these Required Contract Provisions, and further require their inclusion in any lower tier subcontract or purchase order that may in turn be made. The Required Contract Provisions shall not be incorporated by reference in any case. The prime contractor shall be responsible for compliance by any subcontractor or lower tier subcontractor with these Required Contract Provisions.

3. A breach of any of the stipulations contained in these Required Contract Provisions shall be sufficient grounds for termination of the contract.

4. A breach of the following clauses of the Required Contract Provisions may also be grounds for debarment as provided in 29 CFR 5.12:

   Section I, paragraph 2;
   Section IV, paragraphs 1, 2, 3, 4, and 7;
   Section V, paragraphs 1 and 2a through 2g.

5. Disputes arising out of the labor standards provisions of Section IV (except paragraph 5) and Section V of these Required Contract Provisions shall not be subject to the general disputes clause of this contract. Such disputes shall be resolved in accordance with the procedures of the U.S. Department of Labor (DOL) as set forth in 29 CFR 5, 6, and 7. Disputes within the meaning of this clause include disputes between the contractor (or any of its subcontractors) and the contracting agency, the DOL, or the contractor's employees or their representatives.

6. Selection of Labor: During the performance of this contract, the contractor shall not:

   a. discriminate against labor from any other State, possession, or territory of the United States (except for employment preference for Appalachian contracts, when applicable, as specified in Attachment A), or

   b. employ convict labor for any purpose within the limits of the project unless it is labor performed by convicts who are on parole, supervised release, or probation.

II. NONDISCRIMINATION (Applicable to all Federal-aid construction contracts and to all related subcontracts of $10,000 or more.)

1. Equal Employment Opportunity: Equal employment opportunity (EEO) requirements not to discriminate and to take affirmative action to assure equal opportunity as set forth under laws, executive orders, rules, regulations (28 CFR 35, 29 CFR 1630 and 41 CFR 60) and orders of the Secretary of Labor as modified by the provisions prescribed herein, and imposed pursuant to 23 U.S.C. 140 shall constitute the EEO and specific affirmative action standards for the contractor's project activities under this contract. The Equal Opportunity Construction Contract Specifications set forth under 41 CFR 60-4.3 and the provisions of the American Disabilities Act of 1990 (42 U.S.C. 12101 et seq.) set forth under 28 CFR 35 and 29 CFR 1630 are incorporated by reference in this contract. In the execution of this contract, the contractor agrees to comply with the following minimum specific requirement activities of EEO:
   a. The contractor will work with the State highway agency (SHA) and the Federal Government in carrying out EEO obligations and in their review of his/her activities under the contract.

   b. The contractor will accept as his operating policy the following statement:
   "It is the policy of this Company to assure that applicants are employed, and that employees are treated during employment, without regard to their race, religion, sex, color, national origin, age or disability. Such action shall include: employment,

upgrading, demotion, or transfer; recruitment or recruitment advertising; layoff or termination; rates of pay or other forms of compensation; and selection for training, including apprenticeship, preapprenticeship, and/or on-the-job training."

2. EEO Officer. The contractor will designate and make known to the SHA contracting officers an EEO Officer who will have the responsibility for and must be capable of effectively administering and promoting an active contractor program of EEO and who must be assigned adequate authority and responsibility to do so.

3. Dissemination of Policy. All members of the contractor's staff who are authorized to hire, supervise, promote, and discharge employees, or who recommend such action, or who are substantially involved in such action, will be made fully cognizant of, and will implement, the contractor's EEO policy and contractual responsibilities to provide EEO in each grade and classification of employment. To ensure that the above agreement will be met, the following actions will be taken as a minimum:

   a. Periodic meetings of supervisory and personnel office employees will be conducted before the start of work and then not less often than once every six months, at which time the contractor's EEO policy and its implementation will be reviewed and explained. The meetings will be conducted by the EEO Officer.

   b. All new supervisory or personnel office employees will be given a thorough indoctrination by the EEO Officer, covering all major aspects of the contractor's EEO obligations within thirty days following their reporting for duty with the contractor.

   c. All personnel who are engaged in direct recruitment for the project will be instructed by the EEO Officer in the contractor's procedures for locating and hiring minority group employees.

   d. Notices and posters setting forth the contractor's EEO policy will be placed in areas readily accessible to employees, applicants for employment and potential employees.

   e. The contractor's EEO policy and the procedures to implement such policy will be brought to the attention of employees by means of meetings, employee handbooks, or other appropriate means.

4. Recruitment. When advertising for employees, the contractor will include in all advertisements for employees the notation: "An Equal Opportunity Employer." All such advertisements will be placed in publications having a large circulation among minority groups in the area from which the project work force would normally be derived.

   a. The contractor will, unless precluded by a valid bargaining agreement, conduct systematic and direct recruitment through public and private employee referral sources likely to yield qualified minority group applicants. To meet this requirement, the contractor will identify sources of potential minority group employees, and establish with such identified sources procedures whereby minority group applicants may be referred to the contractor for employment consideration.

b. In the event the contractor has a valid bargaining agreement providing for exclusive hiring hall referrals, he is expected to observe the provisions of that agreement to the extent that the system permits the contractor's compliance with EEO contract provisions. (The DOL has held that where implementation of such agreements have the effect of discriminating against minorities or women, or obligates the contractor to do the same, such implementation violates Executive Order 11246, as amended.)

c. The contractor will encourage his present employees to refer minority group applicants for employment. Information and procedures with regard to referring minority group applicants will be discussed with employees.

5. Personnel Actions. Wages, working conditions, and employee benefits shall be established and administered, and personnel actions of every type, including hiring, upgrading, promotion, transfer, demotion, layoff, and termination, shall be taken without regard to race, color, religion, sex, national origin, age or disability. The following procedures shall be followed:

a. The contractor will conduct periodic inspections of project sites to insure that working conditions and employee facilities do not indicate discriminatory treatment of project site personnel.

b. The contractor will periodically evaluate the spread of wages paid within each classification to determine any evidence of discriminatory wage practices.

c. The contractor will periodically review selected personnel actions in depth to determine whether there is evidence of discrimination. Where evidence is found, the contractor will promptly take corrective action. If the review indicates that the discrimination may extend beyond the actions reviewed, such corrective action shall include all affected persons.

d. The contractor will promptly investigate all complaints of alleged discrimination made to the contractor in connection with his obligations under this contract, will attempt to resolve such complaints, and will take appropriate corrective action within a reasonable time. If the investigation indicates that the discrimination may affect persons other than the complainant, such corrective action shall include such other persons. Upon completion of each investigation, the contractor will inform every complainant of all of his avenues of appeal.

6. Training and Promotion.

a. The contractor will assist in locating, qualifying, and increasing the skills of minority group and women employees, and applicants for employment.

b. Consistent with the contractor's work force requirements and as permissible under Federal and State regulations, the contractor shall make full use of training programs, i.e., apprenticeship, and on-the-job training programs for the geographical area of contract performance. Where feasible, 25 percent of apprentices or trainees in each occupation shall be in their first year of apprenticeship or training. In the event a special provision

for training is provided under this contract, this subparagraph will be superseded as indicated in the special provision.

c. The contractor will advise employees and applicants for employment of available training programs and entrance requirements for each.

d. The contractor will periodically review the training and promotion potential of minority group and women employees and will encourage eligible employees to apply for such training and promotion.

7. Unions. If the contractor relies in whole or in part upon unions as a source of employees, the contractor will use his/her best efforts to obtain the cooperation of such unions to increase opportunities for minority groups and women within the unions, and to effect referrals by such unions of minority and female employees. Actions by the contractor either directly or through a contractor's association acting as agent will include the procedures set forth below:

   a. The contractor will use best efforts to develop, in cooperation with the unions, joint training programs aimed toward qualifying more minority group members and women for membership in the unions and increasing the skills of minority group employees and women so that they may qualify for higher paying employment.

   b. The contractor will use best efforts to incorporate an EEO clause into each union agreement to the end that such union will be contractually bound to refer applicants without regard to their race, color, religion, sex, national origin, age or disability.

   c. The contractor is to obtain information as to the referral practices and policies of the labor union except that to the extent such information is within the exclusive possession of the labor union and such labor union refuses to furnish such information to the contractor, the contractor shall so certify to the SHA and shall set forth what efforts have been made to obtain such information.

   d. In the event the union is unable to provide the contractor with a reasonable flow of minority and women referrals within the time limit set forth in the collective bargaining agreement, the contractor will, through independent recruitment efforts, fill the employment vacancies without regard to race, color, religion, sex, national origin, age or disability; making full efforts to obtain qualified and/or qualifiable minority group persons and women. (The DOL has held that it shall be no excuse that the union with which the contractor has a collective bargaining agreement providing for exclusive referral failed to refer minority employees.) In the event the union referral practice prevents the contractor from meeting the obligations pursuant to Executive Order 11246, as amended, and these special provisions, such contractor shall immediately notify the SHA.

8. Selection of Subcontractors, Procurement of Materials and Leasing of Equipment. The contractor shall not discriminate on the grounds of race, color, religion, sex, national origin, age or disability in the selection and retention of subcontractors, including procurement of materials and leases of equipment.

a. The contractor shall notify all potential subcontractors and suppliers of his/her EEO obligations under this contract.

b. Disadvantaged business enterprises (DBE), as defined in 49 CFR 23, shall have equal opportunity to compete for and perform subcontracts which the contractor enters into pursuant to this contract. The contractor will use his best efforts to solicit bids from and to utilize DBE subcontractors or subcontractors with meaningful minority group and female representation among their employees. Contractors shall obtain lists of DBE construction firms from SHA personnel.

c. The contractor will use his best efforts to ensure subcontractor compliance with their EEO obligations.

9. Records and Reports. The contractor shall keep such records as necessary to document compliance with the EEO requirements. Such records shall be retained for a period of three years following completion of the contract work and shall be available at reasonable times and places for inspection by authorized representatives of the SHA and the FHWA.

a. The records kept by the contractor shall document the following:

(1) The number of minority and non-minority group members and women employed in each work classification on the project;

(2) The progress and efforts being made in cooperation with unions, when applicable, to increase employment opportunities for minorities and women;

(3) The progress and efforts being made in locating, hiring, training, qualifying, and upgrading minority and female employees; and

(4) The progress and efforts being made in securing the services of DBE subcontractors or subcontractors with meaningful minority and female representation among their employees.

b. All such records must be retained for a period of three years following completion of the contract work and shall be available at reasonable times and places for inspection by authorized representatives of the MDOT and the Federal Highway Administration.

The Contractor will submit to the MDOT a report for the month of July, indicating the total hours worked by minority, women and non-minority group employees currently engaged in each work classification required by the contract work. This information is to be reported on Form PR-1391. If on-the-job training is being required by "Training Special Provision," the Contractor will be required to furnish Form FHWA-1409. The report is required for week ending July 15 and can be obtained from MDOT, is due by week ending August 20th. This report is to be furnished directly to MDOT - Civil Rights Office.

III. <u>NONSEGREGATED FACILITIES</u> (Applicable to all Federal-aid construction contracts and to all related subcontracts of $10,000 or more.)

a. By submission of this bid, the execution of this contract or subcontract, or the consummation of this material supply agreement or purchase order, as appropriate, the bidder, Federal-aid construction contractor, subcontractor, material supplier, or vendor, as appropriate, certifies that the firm does not maintain or provide for its employees any segregated facilities at any of its establishments, and that the firm does not permit its employees to perform their services at any location, under its control, where segregated facilities are maintained. The firm agrees that a breach of this certification is a violation of the EEO provisions of this contract. The firm further certifies that no employee will be denied access to adequate facilities on the basis of sex or disability.

b. As used in this certification, the term "segregated facilities" means any waiting rooms, work areas, restrooms and washrooms, restaurants and other eating areas, time clocks, locker rooms, and other storage or dressing areas, parking lots, drinking fountains, recreation or entertainment areas, transportation, and housing facilities provided for employees which are segregated by explicit directive, or are, in fact, segregated on the basis of race, color, religion, national origin, age or disability, because of habit, local custom, or otherwise. The only exception will be for the disabled when the demands for accessibility override (e.g. disabled parking).

c. The contractor agrees that it has obtained or will obtain identical certification from proposed subcontractors or material suppliers prior to award of subcontracts or consummation of material supply agreements of $10,000 or more and that it will retain such certifications in its files.

IV. PAYMENT OF PREDETERMINED MINIMUM WAGE (Applicable to all Federal-aid construction contracts exceeding $2,000 and to all related subcontracts, except for projects located on roadways classified as local roads or rural minor collectors, which are exempt.)

1. General:

   a. All mechanics and laborers employed or working upon the site of the work will be paid unconditionally and not less often than once a week and without subsequent deduction or rebate on any account [except such payroll deductions as are permitted by regulations (29 CFR 3) issued by the Secretary of Labor under the Copeland Act (40 U.S.C. 276c)] the full amounts of wages and bona fide fringe benefits (or cash equivalents thereof) due at time of payment. The payment shall be computed at wage rates not less than those contained in the wage determination of the Secretary of Labor (hereinafter "the wage determination") which is attached hereto and made a part hereof, regardless of any contractual relationship which may be alleged to exist between the contractor or its subcontractors and such laborers and mechanics. The wage determination (including any additional classifications and wage rates conformed under paragraph 2 of this Section IV and the DOL poster (WH-1321) or Form FHWA-1495) shall be posted at all times by the contractor and its subcontractors at the site of the work in a prominent and accessible place where it can be easily seen by the workers. For the purpose of this Section, contributions made or costs reasonably anticipated for bona fide fringe benefits under Section 1(b)(2) of the Davis-Bacon Act (40 U.S.C. 276a) on behalf of laborers or mechanics are considered wages paid to such laborers or mechanics, subject to the

provisions of Section IV, paragraph 3b, hereof. Also, for the purpose of this Section, regular contributions made or costs incurred for more than a weekly period (but not less often than quarterly) under plans, funds, or programs, which cover the particular weekly period, are deemed to be constructively made or incurred during such weekly period. Such laborers and mechanics shall be paid the appropriate wage rate and fringe benefits on the wage determination for the classification of work actually performed, without regard to skill, except as provided in paragraphs 4 and 5 of this Section IV.

b. Laborers or mechanics performing work in more than one classification may be compensated at the rate specified for each classification for the time actually worked therein, provided, that the employer's payroll records accurately set forth the time spent in each classification in which work is performed.

c. All rulings and interpretations of the Davis-Bacon Act and related acts contained in 29 CFR 1, 3, and 5 are herein incorporated by reference in this contract.

2. Classification:

a. The SHA contracting officer shall require that any class of laborers or mechanics employed under the contract, which is not listed in the wage determination, shall be classified in conformance with the wage determination.

b. The contracting officer shall approve an additional classification, wage rate and fringe benefits only when the following criteria have been met:

(1) the work to be performed by the additional classification requested is not performed by a classification in the wage determination;

(2) the additional classification is utilized in the area by the construction industry;

(3) the proposed wage rate, including any bona fide fringe benefits, bears a reasonable relationship to the wage rates contained in the wage determination; and

(4) with respect to helpers, when such a classification prevails in the area in which the work is performed.

c. If the contractor or subcontractors, as appropriate, the laborers and mechanics (if known) to be employed in the additional classification or their representatives, and the contracting officer agree on the classification and wage rate (including the amount designated for fringe benefits where appropriate), a report of the action taken shall be sent by the contracting officer to the DOL, Administrator of the Wage and Hour Division, Employment Standards Administration, Washington, D.C. 20210. The Wage and Hour Administrator, or an authorized representative, will approve, modify, or disapprove every additional classification action within 30 days of receipt and so advise the contracting officer or will notify the contracting officer within the 30-day period that additional time is necessary.

d. In the event the contractor or subcontractors, as appropriate, the laborers or mechanics to be employed in the additional classification or their representatives, and the contracting officer do not agree on the proposed classification and wage rate (including the amount designated for fringe benefits, where appropriate), the contracting officer shall refer the questions, including the views of all interested parties and the recommendation of the contracting officer, to the Wage and Hour Administrator for determination. Said Administrator, or an authorized representative, will issue a determination within 30 days of receipt and so advise the contracting officer or will notify the contracting officer within the 30-day period that additional time is necessary

e. The wage rate (including fringe benefits where appropriate) determined pursuant to paragraph 2c or 2d of this Section IV shall be paid to all workers performing work in the additional classification from the first day on which work is performed in the classification.

3. Payment of Fringe Benefits:

a. Whenever the minimum wage rate prescribed in the contract for a class of laborers or mechanics includes a fringe benefit which is not expressed as an hourly rate, the contractor or subcontractors, as appropriate, shall either pay the benefit as stated in the wage determination or shall pay another bona fide fringe benefit or an hourly case equivalent thereof.

b. If the contractor or subcontractor, as appropriate, does not make payments to a trustee or other third person, he/she may consider as a part of the wages of any laborer or mechanic the amount of any costs reasonably anticipated in providing bona fide fringe benefits under a plan or program, provided, that the Secretary of Labor has found, upon the written request of the contractor, that the applicable standards of the Davis-Bacon Act have been met. The Secretary of Labor may require the contractor to set aside in a separate account assets for the meeting of obligations under the plan or program.

4. Apprentices and Trainees (Programs of the U.S. DOL) and Helpers:

a. Apprentices:

(1) Apprentices will be permitted to work at less than the predetermined rate for the work they performed when they are employed pursuant to and individually registered in a bona fide apprenticeship program registered with the DOL, Employment and Training Administration, Bureau of Apprenticeship and Training, or with a State apprenticeship agency recognized by the Bureau, or if a person is employed in his/her first 90 days of probationary employment as an apprentice in such an apprenticeship program, who is not individually registered in the program, but who has been certified by the Bureau of Apprenticeship and Training or a State apprenticeship agency (where appropriate) to be eligible for probationary employment as an apprentice.

(2) The allowable ratio of apprentices to journeyman-level employees on the job site in any craft classification shall not be greater than the ratio permitted to the contractor

as to the entire work force under the registered program. Any employee listed on a payroll at an apprentice wage rate, who is not registered or otherwise employed as stated above, shall be paid not less than the applicable wage rate listed in the wage determination for the classification of work actually performed. In addition, any apprentice performing work on the job site in excess of the ratio permitted under the registered program shall be paid not less than the applicable wage rate on the wage determination for the work actually performed. Where a contractor or subcontractor is performing construction on a project in a locality other than that in which its program is registered, the ratios and wage rates (expressed in percentages of the journeyman-level hourly rate) specified in the contractor's or subcontractor's registered program shall be observed.

(3) Every apprentice must be paid at not less than the rate specified in the registered program for the apprentice's level of progress, expressed as a percentage of the journeyman-level hourly rate specified in the applicable wage determination. Apprentices shall be paid fringe benefits in accordance with the provisions of the apprenticeship program. If the apprenticeship program does not specify fringe benefits, apprentices must be paid the full amount of fringe benefits listed on the wage determination for the applicable classification. If the Administrator for the Wage and Hour Division determines that a different practice prevails for the applicable apprentice classification, fringes shall be paid in accordance with that determination.

(4) In the event the Bureau of Apprenticeship and Training, or a State apprenticeship agency recognized by the Bureau, withdraws approval of an apprenticeship program, the contractor or subcontractor will no longer be permitted to utilize apprentices at less than the applicable predetermined rate for the comparable work performed by regular employees until an acceptable program is approved.

b. Trainees:

(1) Except as provided in 29 CFR 5.16, trainees will not be permitted to work at less than the predetermined rate for the work performed unless they are employed pursuant to and individually registered in a program which has received prior approval, evidenced by formal certification by the DOL, Employment and Training Administration.

(2) The ratio of trainees to journeyman-level employees on the job site shall not be greater than permitted under the plan approved by the Employment and Training Administration. Any employee listed on the payroll at a trainee rate who is not registered and participating in a training plan approved by the Employment and Training Administration shall be paid not less than the applicable wage rate on the wage determination for the classification of work actually performed. In addition, any trainee performing work on the job site in excess of the ratio permitted under the registered program shall be paid not less than the applicable wage rate on the wage determination for the work actually performed.

(3) Every trainee must be paid at not less than the rate specified in the approved program for his/her level of progress, expressed as a percentage of the journeyman-level hourly rate specified in the applicable wage determination. Trainees shall be paid fringe benefits in accordance with the provisions of the trainee program. If the trainee program does not mention fringe benefits, trainees shall be paid the full amount of fringe benefits listed on the wage determination unless the Administrator of the Wage and Hour Division determines that there is an apprenticeship program associated with the corresponding journeyman-level wage rate on the wage determination which provides for less than full fringe benefits for apprentices, in which case such trainees shall receive the same fringe benefits as apprentices.

(4) In the event the Employment and Training Administration withdraws approval of a training program, the contractor or subcontractor will no longer be permitted to utilize trainees at less than the applicable predetermined rate for the work performed until an acceptable program is approved.

c. Helpers. Helpers will be permitted to work on a project if the helper classification is specified and defined on the applicable wage determination or is approved pursuant to the conformance procedure set forth in Section IV.2. Any worker listed on a payroll at a helper wage rate, who is not a helper under a approved definition, shall be paid not less than the applicable wage rate on the wage determination for the classification of work actually performed.

5. Apprentices and Trainees (Programs of the U.S. DOT). Apprentices and trainees working under apprenticeship and skill training programs which have been certified by the Secretary of Transportation as promoting EEO in connection with Federal-aid highway construction programs are not subject to the requirements of paragraph 4 of this Section IV. The straight time hourly wage rates for apprentices and trainees under such programs will be established by the particular programs. The ratio of apprentices and trainees to journeymen shall not be greater than permitted by the terms of the particular program.

6. Withholding. The SHA shall upon its own action or upon written request of an authorized representative of the DOL withhold, or cause to be withheld, from the contractor or subcontractor under this contract or any other Federal contract with the same prime contractor, or any other Federally-assisted contract subject to Davis-Bacon prevailing wage requirements which is held by the same prime contractor, as much of the accrued payments or advances as may be considered necessary to pay laborers and mechanics, including apprentices, trainees, and helpers, employed by the contractor or any subcontractor the full amount of wages required by the contract. In the event of failure to pay any laborer or mechanic, including any apprentice, trainee, or helper, employed or working on the site of the work, all or part of the wages required by the contract, the SHA contracting officer may, after written notice to the contractor, take such action as may be necessary to cause the suspension of any further payment, advance, or guarantee of funds until such violations have ceased.

7. Overtime Requirements. No contractor or subcontractor contracting for any part of the contract work which may require or involve the employment of laborers, mechanics, watchmen, or guards (including apprentices, trainees, and helpers described in paragraphs 4

and 5 above) shall require or permit any laborer, mechanic, watchman, or guard in any workweek in which he/she is employed on such work, to work in excess of 40 hours in such workweek unless such laborer, mechanic, watchman, or guard receives compensation at a rate not less than one-and-one-half times his/her basic rate of pay for all hours worked in excess of 40 hours in such workweek.

8. Violation. Liability for Unpaid Wages; Liquidated Damages: In the event of any violation of the clause set forth in paragraph 7 above, the contractor and any subcontractor responsible thereof shall be liable to the affected employee for his/her unpaid wages. In addition, such contractor and subcontractor shall be liable to the United States (in the case of work done under contract for the District of Columbia or a territory, to such District or to such territory) for liquidated damages. Such liquidated damages shall be computed with respect to each individual laborer, mechanic, watchman, or guard employed in violation of the clause set forth in paragraph 7, in the sum of $10 for each calendar day on which such employee was required or permitted to work in excess of the standard work week of 40 hours without payment of the overtime wages required by the clause set forth in paragraph 7.

9. Withholding for Unpaid Wages and Liquidated Damages. The SHA shall upon its own action or upon written request of any authorized representative of the DOL withhold, or cause to be withheld, from any monies payable on account of work performed by the contractor or subcontractor under any such contract or any other Federal contract with the same prime contractor, or any other Federally-assisted contract subject to the Contract Work Hours and Safety Standards Act, which is held by the same prime contractor, such sums as may be determined to be necessary to satisfy any liabilities of such contractor or subcontractor for unpaid wages and liquidated damages as provided in the clause set forth in paragraph 8 above.

V. STATEMENTS AND PAYROLLS (Applicable to all Federal-aid construction contracts exceeding $2,000 and to all related subcontracts, except for projects located on roadways classified as local roads or rural collectors, which are exempt.)

1. Compliance with Copeland Regulations (29 CFR 3). The contractor shall comply with the Copeland Regulations of the Secretary of Labor which are herein incorporated by reference.

2. Payrolls and Payroll Records:

   a. Payrolls and basic records relating thereto shall be maintained by the contractor and each subcontractor during the course of the work and preserved for a period of 3 years from the date of completion of the contract for all laborers, mechanics, apprentices, trainees, watchmen, helpers, and guards working at the site of the work.

   b. The payroll records shall contain the name, social security number, and address of each such employee; his or her correct classification; hourly rates of wages paid (including rates of contributions or costs anticipated for bona fide fringe benefits or cash equivalent thereof the types described in Section 1(b)(2)(B) of the Davis Bacon Act); daily and weekly number of hours worked; deductions made; and actual wages paid. In addition, for Appalachian contracts, the payroll records shall contain a notation indicating whether the employee does, or does not, normally reside in the labor area as defined in

Attachment A, paragraph 1. Whenever the Secretary of Labor, pursuant to Section IV, paragraph 3b, has found that the wages of any laborer or mechanic include the amount of any costs reasonably anticipated in providing benefits under a plan or program described in Section 1(b)(2)(B) of the Davis Bacon Act, the contractor and each subcontractor shall maintain records which show that the commitment to provide such benefits is enforceable, that the plan or program is financially responsible, that the plan or program has been communicated in writing to the laborers or mechanics affected, and show the cost anticipated or the actual cost incurred in providing benefits. Contractors or subcontractors employing apprentices or trainees under approved programs shall maintain written evidence of the registration of apprentices and trainees, and ratios and wage rates prescribed in the applicable programs.

c. Each contractor and subcontractor shall furnish, each week in which any contract work is performed, to the SHA resident engineer a payroll of wages paid each of its employees (including apprentices, trainees, and helpers, described in Section IV, paragraphs 4 and 5, and watchmen and guards engaged on work during the preceding weekly payroll period). The payroll submitted shall set out accurately and completely all of the information required to be maintained under paragraph 2b of this Section V. This information may be submitted in any form desired. Optional Form WH-347 is available for this purpose and may be purchased from the Superintendent of Documents (Federal stock number 029-005-0014-1), U.S. Government Printing Office, Washington, D.C. 20402. The prime contractor is responsible for the submission of copies of payrolls by all subcontractors.

d. Each payroll submitted shall be accompanied by a "Statement of Compliance," signed by the contractor or subcontractor or his/her agent who pays or supervises the payment of the persons employed under the contract and shall certify the following:

   (1) that the payroll for the payroll period contains the information required to be maintained under paragraph 2b of this Section V and that such information is correct and complete;

   (2) that such laborer or mechanic (including each helper, apprentice, and trainee) employed on the contract during the payroll period has been paid the full weekly wages earned, without rebate, either directly or indirectly, and that no deductions have been made either directly or indirectly from the full wages earned, other than permissible deductions as set forth in the Regulations, 29 CFR 3;

   (3) that each laborer or mechanic has been paid not less that the applicable wage rate and fringe benefits or cash equivalent for the classification of worked performed, as specified in the applicable wage determination incorporated into the contract.

e. The weekly submission of a properly executed certification set forth on the reverse side of Optional Form WH-347 shall satisfy the requirement for submission of the "Statement of Compliance" required by paragraph 2d of this Section V.

f. The falsification of any of the above certifications may subject the contractor to civil or criminal prosecution under 18 U.S.C. 1001 and 31 U.S.C. 231.

g. The contractor or subcontractor shall make the records required under paragraph 2b of this Section V available for inspection, copying, or transcription by authorized representatives of the SHA, the FHWA, or the DOL, and shall permit such representatives to interview employees during working hours on the job. If the contractor or subcontractor fails to submit the required records or to make them available, the SHA, the FHWA, the DOL, or all may, after written notice to the contractor, sponsor, applicant, or owner, take such actions as may be necessary to cause the suspension of any further payment, advance, or guarantee of funds. Furthermore, failure to submit the required records upon request or to make such records available may be grounds for debarment action pursuant to 29 CFR 5.12.

VI. RECORD OF MATERIALS, SUPPLIES, AND LABOR

1. On all Federal-aid contracts on the National Highway System, except those which provide solely for the installation of protective devices at railroad grade crossings, those which are constructed on a force account or direct labor basis, highway beautification contracts, and contracts for which the total final construction cost for roadway and bridge is less than $1,000,000 (23 CFR 635) the contractor shall:

   a. Become familiar with the list of specific materials and supplies contained in Form FHWA-47, "Statement of Materials and Labor Used by Contractor of Highway Construction Involving Federal Funds," prior to the commencement of work under this contract.

   b. Maintain a record of the total cost of all materials and supplies purchased for and incorporated in the work, and also of the quantities of those specific materials and supplies listed on Form FHWA-47, and in the units shown on Form FHWA-47.

   c. Furnish, upon the completion of the contract, to the SHA resident engineer on Form FHWA-47 together with the data required in paragraph 1b relative to materials and supplies, a final labor summary of all contract work indicating the total hours worked and the total amount earned.

2. At the prime contractor's option, either a single report covering all contract work or separate reports for the contractor and for each subcontract shall be submitted.

VII. SUBLETTING OR ASSIGNING THE CONTRACT

1. The contractor shall perform with its own organization contract work amounting to not less than 30 percent (or a greater percentage if specified elsewhere in the contract) of the total original contract price, excluding any specialty items designated by the State. Specialty items may be performed by subcontract and the amount of any such specialty items performed may be deducted from the total original contract price before computing the amount of work required to be performed by the contractor's own organization (23 CFR 635).

   a. "Its own organization" shall be construed to include only workers employed and paid directly by the prime contractor and equipment owned or rented by the prime contractor,

with or without operators. Such term does not include employees or equipment of a subcontractor, assignee, or agent of the prime contractor.

b. "Specialty Items" shall be construed to be limited to work that requires highly specialized knowledge, abilities, or equipment not ordinarily available in the type of contracting organizations qualified and expected to bid on the contract as a whole and in general are to be limited to minor components of the overall contract.

2. The contract amount upon which the requirements set forth in paragraph 1 of Section VII is computed includes the cost of material and manufactured products which are to be purchased or produced by the contractor under the contract provisions.

3. The contractor shall furnish (a) a competent superintendent or supervisor who is employed by the firm, has full authority to direct performance of the work in accordance with the contract requirements, and is in charge of all construction operations (regardless of who performs the work) and (b) such other of its own organizational resources (supervision, management, and engineering services) as the SHA contracting officer determines is necessary to assure the performance of the contract.

4. No portion of the contract shall be sublet, assigned or otherwise disposed of except with the written consent of the SHA contracting officer, or authorized representative, and such consent when given shall not be construed to relieve the contractor of any responsibility for the fulfillment of the contract. Written consent will be given only after the SHA has assured that each subcontract is evidenced in writing and that it contains all pertinent provisions and requirements of the prime contract.

VIII. SAFETY: ACCIDENT PREVENTION

1. In the performance of this contract the contractor shall comply with all applicable Federal, State, and local laws governing safety, health, and sanitation (23 CFR 635). The contractor shall provide all safeguards, safety devices and protective equipment and take any other needed actions as it determines, or as the SHA contracting officer may determine, to be reasonably necessary to protect the life and health of employees on the job and the safety of the public and to protect property in connection with the performance of the work covered by the contract.

2. It is a condition of this contract, and shall be made a condition of each subcontract, which the contractor enters into pursuant to this contract, that the contractor and any subcontractor shall not permit any employee, in performance of the contract, to work in surroundings or under conditions which are unsanitary, hazardous or dangerous to his/her health or safety, as determined under construction safety and health standards (29 CFR 1926) promulgated by the Secretary of Labor, in accordance with Section 107 of the Contract Work Hours and Safety Standards Act (40 U.S.C. 333).

3. Pursuant to 29 CFR 1926.3, it is a condition of this contract that the Secretary of Labor or authorized representative thereof, shall have right of entry to any site of contract performance to inspect or investigate the matter of compliance with the construction safety and health

standards and to carry out the duties of the Secretary under Section 107 of the Contract Work Hours and Safety Standards Act (40 U.S.C. 333).

IX. FALSE STATEMENTS CONCERNING HIGHWAY PROJECTS In order to assure high quality and durable construction in conformity with approved plans and specifications and a high degree of reliability on statements and representations made by engineers, contractors, suppliers, and workers on Federal-aid highway projects, it is essential that all persons concerned with the project perform their functions as carefully, thoroughly, and honestly as possible. Willful falsification, distortion, or misrepresentation with respect to any facts related to the project is a violation of Federal law. To prevent any misunderstanding regarding the seriousness of these and similar acts, the following notice shall be posted on each Federal-aid highway project (23 CFR 635) in one or more places where it is readily available to all persons concerned with the project:

NOTICE TO ALL PERSONNEL ENGAGED ON FEDERAL-AID HIGHWAY PROJECTS

18 U.S.C. 1020 reads as follows:

"Whoever, being an officer, agent, or employee of the United States, or of any State or Territory, or whoever, whether a person, association, firm, or corporation, knowingly makes any false statement, false representation, or false report as to the character, quality, quantity, or cost of the material used or to be used, or the quantity or quality of the work performed or to be performed, or the cost thereof in connection with the submission of plans, maps, specifications, contracts, or costs of construction on any highway or related project submitted for approval to the Secretary of Transportation; or

Whoever knowingly makes any false statement, false representation, false report or false claim with respect to the character, quality, quantity, or cost of any work performed or to be performed, or materials furnished or to be furnished, in connection with the construction of any highway or related project approved by the Secretary of Transportation; or

Whoever knowingly makes any false statement or false representation as to material fact in any statement, certificate, or report submitted pursuant to provisions of the Federal-aid Roads Act approved July 1, 1916, (39 Stat. 355), as amended and supplemented;

Shall be fined not more that $10,000 or imprisoned not more than 5 years or both."

X. IMPLEMENTATION OF CLEAN AIR ACT AND FEDERAL WATER POLLUTION CONTROL ACT (Applicable to all Federal-aid construction contracts and to all related subcontracts of $100,000 or more.)

By submission of this bid or the execution of this contract, or subcontract, as appropriate, the bidder, Federal-aid construction contractor, or subcontractor, as appropriate, will be deemed to have stipulated as follows:

1. That any facility that is or will be utilized in the performance of this contract, unless such contract is exempt under the Clean Air Act, as amended (42 U.S.C. 1857 et seq., as amended by Pub.L. 91-604), and under the Federal Water Pollution Control Act, as amended (33 U.S.C. 1251 et seq., as amended by Pub.L. 92-500), Executive Order 11738, and regulations

in implementation thereof (40 CFR 15) is not listed, on the date of contract award, on the U.S. Environmental Protection Agency (EPA) List of Violating Facilities pursuant to 40 CFR 15.20.

2. That the firm agrees to comply and remain in compliance with all the requirements of Section 114 of the Clean Air Act and Section 308 of the Federal Water Pollution Control Act and all regulations and guidelines listed thereunder.

3. That the firm shall promptly notify the SHA of the receipt of any communication from the Director, Office of Federal Activities, EPA, indicating that a facility that is or will be utilized for the contract is under consideration to be listed on the EPA List of Violating Facilities.

4. That the firm agrees to include or cause to be included the requirements of paragraph 1 through 4 of this Section X in every nonexempt subcontract, and further agrees to take such action as the government may direct as a means of enforcing such requirements.

XI. CERTIFICATION REGARDING DEBARMENT, SUSPENSION, INELIGIBILITY AND VOLUNTARY EXCLUSION

1. Instructions for Certification - Primary Covered Transactions:
(Applicable to all Federal-aid contracts - 49 CFR 29)

   a. By signing and submitting this proposal, the prospective primary participant is providing the certification set out below.

   b. The inability of a person to provide the certification set out below will not necessarily result in denial of participation in this covered transaction. The prospective participant shall submit an explanation of why it cannot provide the certification set out below. The certification or explanation will be considered in connection with the department or agency's determination whether to enter into this transaction. However, failure of the prospective primary participant to furnish a certification or an explanation shall disqualify such a person from participation in this transaction.

   c. The certification in this clause is a material representation of fact upon which reliance was placed when the department or agency determined to enter into this transaction. If it is later determined that the prospective primary participant knowingly rendered an erroneous certification, in addition to other remedies available to the Federal Government, the department or agency may terminate this transaction for cause of default.

   d. The prospective primary participant shall provide immediate written notice to the department or agency to whom this proposal is submitted if any time the prospective primary participant learns that its certification was erroneous when submitted or has become erroneous by reason of changed circumstances.

   e. The terms "covered transaction," "debarred," "suspended," "ineligible," "lower tier covered transaction," "participant," "person," "primary covered transaction," "principal," "proposal," and "voluntarily excluded," as used in this clause, have the meanings set out

in the Definitions and Coverage sections of rules implementing Executive Order 12549. You may contact the department or agency to which this proposal is submitted for assistance in obtaining a copy of those regulations.

f. The prospective primary participant agrees by submitting this proposal that, should the proposed covered transaction be entered into, it shall not knowingly enter into any lower tier covered transaction with a person who is debarred, suspended, declared ineligible, or voluntarily excluded from participation in this covered transaction, unless authorized by the department or agency entering into this transaction.

g. The prospective primary participant further agrees by submitting this proposal that it will include the clause titled "Certification Regarding Debarment, Suspension, Ineligibility and Voluntary Exclusion-Lower Tier Covered Transaction," provided by the department or agency entering into this covered transaction, without modification, in all lower tier covered transactions and in all solicitations for lower tier covered transactions.

h. A participant in a covered transaction may rely upon a certification of a prospective participant in a lower tier covered transaction that is not debarred, suspended, ineligible, or voluntarily excluded from the covered transaction, unless it knows that the certification is erroneous. A participant may decide the method and frequency by which it determines the eligibility of its principals. Each participant may, but is not required to, check the nonprocurement portion of the "Lists of Parties Excluded From Federal Procurement or Nonprocurement Programs" (Nonprocurement List) which is compiled by the General Services Administration.

i. Nothing contained in the foregoing shall be construed to require establishment of a system of records in order to render in good faith the certification required by this clause. The knowledge and information of participant is not required to exceed that which is normally possessed by a prudent person in the ordinary course of business dealings.

j. Except for transactions authorized under paragraph f of these instructions, if a participant in a covered transaction knowingly enters into a lower tier covered transaction with a person who is suspended, debarred, ineligible, or voluntarily excluded from participation in this transaction, in addition to other remedies available to the Federal Government, the department or agency may terminate this transaction for cause or default.

****

Certification Regarding Debarment, Suspension, Ineligibility and Voluntary Exclusion--
Primary Covered Transactions

1. The prospective primary participant certifies to the best of its knowledge and belief, that it and its principals:

a. Are not presently debarred, suspended, proposed for debarment, declared ineligible, or voluntarily excluded from covered transactions by any Federal department or agency;

b. Have not within a 3-year period preceding this proposal been convicted of or had a civil judgment rendered against them for commission of fraud or a criminal offense in connection with obtaining, attempting to obtain, or performing a public (Federal, State or

local) transaction or contract under a public transaction; violation of Federal or State antitrust statutes or commission of embezzlement, theft, forgery, bribery, falsification or destruction of records, making false statements, or receiving stolen property;

c. Are not presently indicted for or otherwise criminally or civilly charged by a governmental entity (Federal, State or local) with commission of any of the offenses enumerated in paragraph 1b of this certification; and

d. Have not within a 3-year period preceding this application/proposal had one or more public transactions (Federal, State or local) terminated for cause or default.

2. Where the prospective primary participant is unable to certify to any of the statements in this certification, such prospective participant shall attach an explanation to this proposal.

****

2. Instructions for Certification - Lower Tier Covered Transactions: (Applicable to all subcontracts, purchase orders and other lower tier transactions of $25,000 or more - 49 CFR 29)

a. By signing and submitting this proposal, the prospective lower tier is providing the certification set out below.

b. The certification in this clause is a material representation of fact upon which reliance was placed when this transaction was entered into. If it is later determined that the prospective lower tier participant knowingly rendered an erroneous certification, in addition to other remedies available to the Federal Government, the department, or agency with which this transaction originated may pursue available remedies, including suspension and/or debarment.

c. The prospective lower tier participant shall provide immediate written notice to the person to which this proposal is submitted if at any time the prospective lower tier participant learns that its certification was erroneous by reason of changed circumstances.

d. The terms "covered transaction," "debarred," "suspended," "ineligible," "primary covered transaction," "participant," "person," "principal," "proposal," and "voluntarily excluded," as used in this clause, have the meanings set out in the Definitions and Coverage sections of rules implementing Executive Order 12549. You may contact the person to which this proposal is submitted for assistance in obtaining a copy of those regulations.

e. The prospective lower tier participant agrees by submitting this proposal that, should the proposed covered transaction be entered into, it shall not knowingly enter into any lower tier covered transaction with a person who is debarred, suspended, declared ineligible, or voluntarily excluded from participation in this covered transaction, unless authorized by the department or agency with which this transaction originated.

f. The prospective lower tier participant further agrees by submitting this proposal that it will include this clause titled "Certification Regarding Debarment, Suspension, Ineligibility and Voluntary Exclusion-Lower Tier Covered Transaction," without modification, in all lower tier covered transactions and in all solicitations for lower tier covered transactions.

g. A participant in a covered transaction may rely upon a certification of a prospective participant in a lower tier covered transaction that is not debarred, suspended, ineligible, or voluntarily excluded from the covered transaction, unless it knows that the certification is erroneous. A participant may decide the method and frequency by which it determines the eligibility of its principals. Each participant may, but is not required to, check the Nonprocurement List.

h. Nothing contained in the foregoing shall be construed to require establishment of a system of records in order to render in good faith the certification required by this clause. The knowledge and information of participant is not required to exceed that which is normally possessed by a prudent person in the ordinary course of business dealings.

i. Except for transactions authorized under paragraph e of these instructions, if a participant in a covered transaction knowingly enters into a lower tier covered transaction with a person who is suspended, debarred, ineligible, or voluntarily excluded from participation in this transaction, in addition to other remedies available to the Federal Government, the department or agency with which this transaction originated may pursue available remedies, including suspension and/or debarment.

****

Certification Regarding Debarment, Suspension, Ineligibility and Voluntary Exclusion--
Lower Tier Covered Transactions:

1. The prospective lower tier participant certifies, by submission of this proposal, that neither it nor its principals is presently debarred, suspended, proposed for debarment, declared ineligible, or voluntarily excluded from participation in this transaction by any Federal department or agency.

2. Where the prospective lower tier participant is unable to certify to any of the statements in this certification, such prospective participant shall attach an explanation to this proposal.

****

XII. CERTIFICATION REGARDING USE OF CONTRACT FUNDS FOR LOBBYING
(Applicable to all Federal-aid construction contracts and to all related subcontracts which exceed $100,000 - 49 CFR 20)

1. The prospective participant certifies, by signing and submitting this bid or proposal, to the best of his or her knowledge and belief, that:
   a. No Federal appropriated funds have been paid or will be paid, by or on behalf of the undersigned, to any person for influencing or attempting to influence an officer or employee of any Federal agency, a Member of Congress, an officer or employee of Congress, or an employee of a Member of Congress in connection with the awarding of any Federal contract, the making of any Federal grant, the making of any Federal loan, the entering into of any cooperative agreement, and the extension, continuation, renewal, amendment, or modification of any Federal contract, grant, loan, or cooperative agreement.

   b. If any funds other than Federal appropriated funds have been paid or will be paid to any person for influencing or attempting to influence an officer or employee of any Federal agency, a Member of Congress, an officer or employee of Congress, or an employee of a

Member of Congress in connection with this Federal contract, grant, loan, or cooperative agreement, the undersigned shall complete and submit Standard Form-LLL, "Disclosure Form to Report Lobbying," in accordance with its instructions.

2. This certification is a material representation of fact upon which reliance was placed when this transaction was made or entered into. Submission of this certification is a prerequisite for making or entering into this transaction imposed by 31 U.S.C. 1352. Any person who fails to file the required certification shall be subject to a civil penalty of not less than $10,000 and not more than $100,000 for each such failure.

3. The prospective participant also agrees by submitting his or her bid or proposal that he or she shall require that the language of this certification be included in all lower tier subcontracts, which exceed $100,000 and that all such recipients shall certify and disclose accordingly.

End of FHWA 1273

COPY NO. ____

ROUTE 1 - STATE ROAD RECONSTRUCTION
WATER MAIN REPLACEMENT

KITTERY WATER DISTRICT
KITTERY, ME

BIDDING AND CONTRACT REQUIREMENTS AND SPECIFICATIONS

April 2008

11009A

WRIGHT-PIERCE
Engineering a Better Environment

Middletown, CT • Andover, MA • Portland, ME
Topsham, ME • Portsmouth, NH • Providence, RI

KITTERY WATER DISTRICT

CONTRACT REQUIREMENTS AND SPECIFICATIONS

FOR

WATER MAIN REPLACEMENT
ROUTE 1 - STATE ROAD RECONSTRUCTION
KITTERY, ME

APRIL 2008

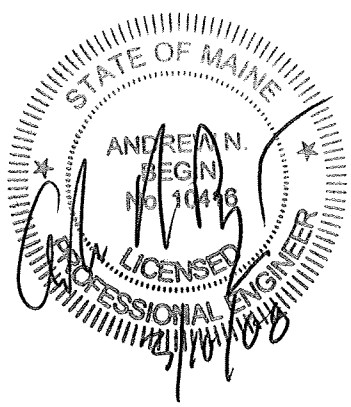

Prepared By:

Wright-Pierce
99 Main Street
Topsham, Maine 04086

Phone: (207) 725-8721

DIVISION 1

GENERAL REQUIREMENTS

Scope of Work

The scope of this Division covers the general administrative requirements and the general work related provisions of the Construction Contract.

Contents of Division

Section No.	Section Title	Page No.
01010	Summary of Work	01010-1
01050	Coordination	01050-1
01070	Abbreviations and Symbols	01070-1
01150	Measurement and Payment	01150-1
01200	Project Meetings	01200-1
01310	Construction Schedules	01310-1
01320	Safety and Health Plan	01320-1
01340	Submittals	01340-1
01370	Schedule of Values	01370-1
01400	Quality Control	01400-1
01546	Use of Explosives	01546-1
01562	Dust Control	01562-1
01570	Traffic Regulation	01570-1

Section No.	Section Title	Page No.
01710	Project Cleaning	01710-1
01720	Project Record Documents	01720-1

END OF SECTION

SECTION 01010A

SUMMARY OF WORK

PART 1 - GENERAL

1.1 DESCRIPTION

A. Work Included: Water main replacement along State Road for the Kittery Water District. The major proposed work under this Contract includes:

1. Construction of:
   a. Over 5,100 feet of 6, 8 and 12-inch diameter water main & appurtenances;
   b. Hydrants;
   c. Water services;
   d. Other appurtenances as shown on the Drawings and specified herein.
   e. Connections to existing water main.
2. Furnishing of Water Works Materials
   a. The following materials will be furnished by the Kittery Water District:
      i. Water main;
      ii. Fittings (elbows, reducers, sleeves, tees, wyes);
      iii. Valves & boxes;
      iv. Hydrants;
      v. Service corporations
      vi. Service curb stop and box
      vii. Service line
      viii. Assembly accessories (bolting hardware, gaskets, grip rings, thrust rods, etc.)
   b. Installation by the contractor
   c. Storage of these materials (including pipe) by the Kittery Water District, contractor responsible for moving materials purchased by the District.
   d. All other equipment, labor and materials required to perform the work are by the contractor.
3. Flushing, pressure testing and disinfection
   a. Performed by the Kittery Water District
4. Maintain water service throughout construction.
5. Short Duration Shutdown work:
   a. Southern Shutdown - Station 47+00 +/-
      i. Dig test pit to locate existing 6-inch pipe.
      ii. Pre-assemble 6-inch wye connection with 12-inch gate valve.
      iii. Pressure test and disinfect pre-assembled piping.
      iv. Coordinate night shut down work with Kittery Water District.
      v. Cut existing 6-inch water main after taken out of service.
      vi. Solid sleeve connect pre-assembled wye connection.
      vii. Place connection in service, verify no leakage prior to backfilling.
   b. Northern Shutdown - Station 92+75 +/-

i. Dig test pit to locate existing 8-inch pipe.
ii. Pre-assemble 8-inch wye connection with 12-inch gate valve.
iii. Pressure test and disinfect pre-assembled piping.
iv. Coordinate night shut down work with Kittery Water District.
v. Cut existing 6-inch water main after taken out of service.
vi. Solid sleeve connect pre-assembled wye connection.
vii. Place connection in service, verify no leakage prior to backfilling.

c. All short duration shut down work to occur after the hours of 10 pm, shutdowns are expected to only last a maximum of 2-4 hours. Side street connection work may be accomplished during daylight hours.

6. Remove and Stack Existing Hydrants
   a. Existing hydrants taken out of service shall be removed by the contractor and stacked at the Kittery Water District's stock yard, to become property of the Kittery Water District.

B. Related Work Specified Elsewhere:
   1. Coordination: Section 01050
   2. Construction Schedules: Section 01310.

C. Removals, Relocations and Rearrangements
   1. Examine the existing site for the work of all trades which will influence the cost of the work under the bid. This work shall include removals, relocations and rearrangements which may interfere with, disturb or complicate the performance of the work under the bid involving systems, equipment and related service lines, which shall continue to be utilized as part of the finished project. The Contractor is responsible for all coordination in this regard.
   2. Provide in the bid a sufficient amount to include all removals, relocations, rearrangements and reconnections herein specified, necessary or required to provide approved operation and coordination of the combined new and existing systems and equipment.
   3. Existing water main is to be abandoned in place. Existing pipe removed is the responsibility of the contractor, this work is incidental to installation of the water main.

PART 2 - PRODUCTS

Not Applicable.

PART 3 - EXECUTION

3.1 MAINTAIN EXISTING WORKS

A. Existing Operations:
   1. The existing water main provides potable drinking water to services along State Road. The intent of the work is to maintain water service without the need of temporary connections. If temporary connections are found necessary to perform the work, this shall be considered incidental to laying the water main.

2. The two short duration shut downs described above and side street tie-ins are the only anticipated shutdowns to perform the work. The Contractor shall notify the Owner a minimum of 72 hours in advance of any work which may affect or disrupt the operation prior to starting the work.

B. Minimize Interference
1. The Contractor shall at all times conduct his operations so as to interfere as little as possible with existing works. The Contractor shall develop a program, in cooperation with the Owner, Engineer, and interested officials, which shall provide for the construction and putting into service of the new works in the most orderly manner possible. This program shall be adhered to except as deviations therefrom are expressly permitted.
2. Work of connecting with, cutting into, and reconstructing existing pipes or structures shall be planned to interfere with the operation of the existing facilities for the shortest possible time and when the demands on the facilities best permit such interference. It may be necessary to work outside of normal working hours to minimize interference. Before starting work which will interfere with the operation of existing facilities, the Contractor shall do all possible preparatory work and shall see that all tools, materials, and equipment are made ready and at hand.

3.2 CONSTRUCTION SEQUENCE

A. Construction of the proposed water main shall be performed in a linear manor. The mainline shall be constructed and accepted prior to performing service work.
B. The Contractor shall submit to the Engineer for review and acceptance a complete schedule of his proposed sequence of construction operations prior to commencing any work. This schedule shall include the Contractor's plans for doing the work.
C. The Contractor must submit to the Engineer a written request to deviate from the above sequence, provided he can demonstrate to the Engineer that the continuity and degree of treatment will not be adversely affected.
D. The Contractor shall preliminarily notify the Owner a minimum of seven (7) days in advance of any work which may affect or disrupt the operation of the existing facilities. Once the interruption occurs the Contractor must maintain a workforce on-site to complete the work in the agreed upon time.
E. Any work by the Contractor which requires the mechanical isolation of an existing piece of infrastructure, process or system shall be coordinated with the Owner. Any and all isolation of mechanical equipment or process shall be accomplished in strict accordance with applicable codes and standards and the stricter of the Contractor's or Owner's procedures.
F. The Contractor is not permitted to operate District infrastructure.
G. Should the Contractor fail to complete the Work within the down-time specified and should the Owner incur any actual costs directly or indirectly as a result thereof that would otherwise not have incurred had the Contractor successfully completed the Work within the specified down-time, the Contractor agrees to pay the Owner such actual incurred costs. Such costs may include, but not be limited to, Owner's

actual costs of any additional maintenance and operations labor, material, equipment, and chemical costs, or any other related actual costs incurred in order for the Owner to keep the water service operable.

H. The Contractor shall allow in the Bid reasonable time to accommodate operations at the existing wastewater treatment plant, including the need for the Owner to respond to emergencies. The Contractor shall not be eligible for additional compensation due to interruptions of the Contractor's schedule, in order for the Owner to respond to routine conditions.

END OF SECTION

SECTION 01050

COORDINATION

PART 1 - GENERAL

1.1 DESCRIPTION

A. Contractor is required to work in close proximity to Owner's existing facilities. The Contractor, under this Contract, will be responsible for coordinating construction activities with Owner to ensure that services, facilities, and safe working conditions are maintained.

B. Other Construction Contractors will be interfacing with this Contract and working within the work area and in the vicinity of this Contract. The Contractor, under this contract, shall act as Construction Coordinator and shall coordinate construction activities with other Contractors working for Owner.

C. Any damage to existing structures, equipment and property, accepted equipment or structures, and property or work in progress by others; as a result of the Contractor's or his subcontractor's operations shall be made good by the Contractor at no additional cost to the Owner.

1.2 COORDINATION WITH OTHERS

A. Town of Kittery:

1. Contractor shall coordinate access, egress, detours and traffic control, if required, at each site with the Police Department. The Contractor shall notify Police, Fire Department and Rescue Squad at least 24 hours in advance of any street closings or detours.
2. Contractor shall coordinate all work on Water District property with the District personnel.
3. The Contractor shall be responsible for coordinating and maintaining public services to all public and private properties.

B. Kittery Water District (KWD)

1. Contractor shall be responsible for coordinating all work in the vicinity of water lines with the KWD. Contractor shall bear all costs for the District's temporary facilities, if found necessary to complete the work and maintain service.

C. Central Maine Power Company (CMP):

1. The Contractor shall be responsible for coordinating all work around CMP facilities with CMP and shall bear all costs of inspection requirements, temporary facilities relocation and other requirements.

D. Verizon:

1. The Contractor shall be responsible for coordinating and providing telephone service to all construction sites, both temporary and permanent. The Contractor shall also be responsible for coordinating all work around Verizon facilities with Verizon and shall bear all costs of inspection requirements, temporary facilities relocation and all other requirements.

E. The Contractor shall provide the District Project Representative and Chief Operator a construction schedule indicating the times to perform the work required. The Contractor shall update the schedule when required and give the facility one week notice before the start of any work. The Contractor shall daily communicate with the District Project Representative concerning updating the schedule, job progress, delay or early starts that affect the work.

END OF SECTION

SECTION 01070

ABBREVIATIONS & SYMBOLS

PART 1 - GENERAL

1.1 DESCRIPTION

A. Where any of the following abbreviations are used in these Specifications, they shall have the meaning set forth opposite each.

AASHTO	American Association of State Highway and Transportation Officials
AC	Alternating Current
ACI	American Concrete Institute
ACP	Asbestos Cement Pipe
AGA	American Gas Association
AIC	Ampere Interrupting Capacity
AGMA	American Gear Manufacturers Association
AIEE(IEEE)	American Institute of Electrical Engineers (Institute of Electrical and Electronics Engineers, Inc.)
AISC	American Institute of Steel Construction
amp	Ampere
125-16	
Amer. Std.	American Standard for Cast Iron Pipe Flanges and Flanged Fittings, Class l25 (ASA Bl6 ll960)
ANSI	American National Standards Institute
API	American Petroleum Institute
ASA	American Standards Association
ASCE	American Society of Civil Engineers
ASHRAE	American Society of Heating, Refrigerating and Air Conditioning Engineers
ASME	American Society of Mechanical Engineers
ASTM	American Society for Testing and Materials
AWG	American or Brown and Sharpe Wire Gage
AWWA	American Water Works Association
BOD	Biochemical Oxygen Demand
c.f.	Cubic Foot
c.f.m.	Cubic Foot Per Minute
c.f.s.	Cubic Foot Per Second
CI	Cast Iron
CIPRA	Cast Iron Pipe Research Association
CSI	Construction Specifications Institute
c.y.	Cubic Yards
DC	Direct Current
DEP	Department of Environmental Protection

DI	Ductile Iron
DOT	Department of Transportation
EDR	Equivalent Directional Radiation
EPA	U.S. Environmental Protection Agency
fps	Feet Per Second
ft.	Feet
gal.	Gallons
gpd	Gallons Per Day
gpm	Gallons Per Minute
HP	Horsepower
IBR	Institute of Boiler and Radiator Manufacturers
in.	Inches
inter.	Interlock
ISA	Instrument Society of America
kva	Kilovolt-ampere
kw	Kilowatt
lb.	Pound
max.	Maximum
MCB	Master Car Builders
MGD	Million Gallons Per Day
Min.	Minimum
NBS	National Bureau of Standards
NEC	National Electrical Code, Latest Edition
NEMA	National Electrical Manufacturers Association
NEWWA	New England Water Works Association
NPT	National Pipe Thread
OS&Y	Outside Screw and Yoke
PCA	Portland Cement Association
ppm	Parts Per Million
%	Percent
psi	Pounds Per Square Inch
psig	Pounds Per Square Inch Gage
PVC	Polyvinyl Chloride
rpm	Revolutions Per Minute
RUS	Rural Utility Service
s.f.	Square Foot
STL. W.G.	U.S. Steel Wire, Washburn and Moen, American Steel and Wire Cos., or Roebling Gage
s.y.	Square yard
TDH	Total Dynamic Head
USAS	Standards of the United States of America Standards Institute (formerly American Standards Association)
USS GAGE	United States Standard Gage
VC	Vitrified Clay
WSP	Working Steam Pressure

Fed. Spec.	Federal Specifications issued by the Federal Supply Service of the General Service Administration, Washington, D.C.

END OF SECTION

SECTION 01150

MEASUREMENT AND PAYMENT

PART 1 - GENERAL

1.1 DESCRIPTION

A. For lump sum items, payment shall be made to the Contractor in accordance with an accepted Progress Schedule and Schedule of Values on the basis of actual work completed.

B. For unit-price items, payment shall be based on the actual amount of work accepted and for the actual amount of materials in place, as shown by the final measurements.

1. All units of measurement shall be standard United States convention as applied to the specific items of work by tradition and as interpreted by the Engineer.
2. At the end of each day's work, the Contractor's Superintendent or other authorized representative of the Contractor shall meet with the Resident Project Representative and determine the quantities of unit price work accomplished and/or completed during the work day.
3. The Resident Project Representative will then prepare two "Daily Progress Reports" which shall be signed by both the Resident Project Representative and Contractor's Representative.
4. Once each month the Resident Project Representative will prepare two "Monthly Progress Summation" forms from the month's accumulation of "Daily Progress Reports" which shall also be signed by both the Resident Project Representative and Contractor's Representative.
5. These completed forms will provide the basis of the Engineer's monthly quantity estimate upon which payment will be made. Items not appearing on both the Daily Progress Reports and Monthly Progress Summation will not be included for payment. Items appearing on forms not properly signed by the Contractor will not be included for payment.
6. After the work is completed and before final payment is made therefor, the Engineer will make final measurements to determine the quantities of various items of work accepted as the basis for final settlement.

1.2 SCOPE OF PAYMENT

A. Payments to the Contractor will be made for the actual quantities of the Contract items performed and accepted in accordance with the Contract Documents. Upon completion of the construction, if these actual quantities show either an increase or decrease from the quantities given in the Bid Form, the Contract unit prices will still prevail.

B. The Contractor shall accept in compensation, as herein provided, in full payment for furnishing all materials, labor, tools, equipment, and incidentals necessary to the completed work and for performing all work contemplated and embraced by the

Contract; also for all loss or damage arising from the nature of the Work, or from the action of the elements, or from any unforeseen difficulties which may be encountered during the prosecution of the Work and until its final acceptance by the Engineer, and for all risks of every description connected with the prosecution of the work, except as provided herein, also for all expenses incurred in consequence of the suspension of the work as herein authorized.

C. The payment of any partial estimate or of any retained percentage except by and under the approved final invoice, in no way shall affect the obligation of the Contractor to repair or renew any defective parts of the construction or to be responsible for all damage due to such defects.

1.3 PAYMENT FOR INCREASED OR DECREASED QUANTITIES

A. When alterations in the quantities of work not requiring supplemental agreements, as hereinbefore provided for, are ordered and performed, the Contractor shall accept payment in full at the Contract price for the actual quantities of work done. No allowance will be made for anticipated profits. Increased or decreased work involving supplemental agreements will be paid for as stipulated in such agreements.

1.4 OMITTED ITEMS

A. Should any items contained in the bid form be found unnecessary for the proper completion of the work contracted, the Engineer may eliminate such items from the Contract, and such action shall in no way invalidate the Contract, and no allowance will be made for items so eliminated in making final payment to the Contractor.

1.5 PARTIAL PAYMENTS

A. Partial payments shall be made monthly as the work progresses. Partial payment shall be made subject to the provisions of the Supplemental and General Conditions.

1.6 PAYMENT FOR MATERIAL DELIVERED

A. When requested by the Contractor and at the discretion of the Owner, payment may be made for all or part of the value of acceptable, non-perishable materials and equipment which are to be incorporated into bid items, have not been used, and have been delivered to the construction site or placed in storage places acceptable to the Owner. Payment shall be subject to the provisions of the General and Supplementary Conditions.

B. No payment shall be made upon fuels, supplies, lumber, false work, or other materials, or on temporary structures or other work of any kind which are not a permanent part of the Contract.

1.7 FINAL PAYMENT

A. The Engineer will make, as soon as practicable after the entire completion of the project, a final quantity invoice of the amount of the Work performed and the value

of such Work. Owner shall make final payments of the sum found due less retainages subject to the provisions of the General and Supplementary Conditions.

1.8 INCIDENTAL WORK

A. Incidental work items for which separate payment is not made include (but are not limited to) the following items:
   1. Clearing, grubbing and stripping
   2. Dust control
   3. Dewatering
   4. Clean-up
   5. Erosion control
   6. Loam and seeding
   7. Restoration of property, and replacement of fences, curbs, structures and other minor items disturbed by the construction activities.
   8. Coordination with the Owner, Utilities and others, including related inspection cost (refer to Section 01050)
   9. Utility crossings and relocations, unless payment is otherwise made
   10. Traffic Regulation
   11. Steel and/or wood sheeting as required, including that left in place
   12. Project record documents
   13. Materials testing
   14. Construction schedules, bonds, insurance, shop drawings, warranties, guarantees, certifications, and other submittals required by the Contract Documents
   15. Repair and replacement of utilities damaged by construction activities and corresponding proper disposal of removed materials
   16. Temporary utilities for construction and to maintain existing service during construction
   17. Quality assurance testing
   18. Temporary construction and other facilities not to be permanently incorporated into the Work necessary for construction sequencing and maintenance of operations
   19. Weather protection
   20. Permits not otherwise paid for or provided by the Owner
   21. Visits to the Project site or elsewhere by personnel or agents of the Contractor, including manufacturer's representatives, as may be required.
   22. On-site and other facilities acceptable to Engineer for the storage of materials, supplies and equipment to be incorporated into the Work
   23. Facilities start-up services required by the Contract Documents.
   24. Mobilization/demobilization.
   25. Test pits to determine existing utility locations, soils conditions, and as required to complete the project.
   26. 2" Rigid Board Insulation
   27. Pipe Markings
   28. Pavement Markings

29. Removal of Existing Pavement
30. Earthwork (except rock)
31. Preconstruction Photos and Videos
32. Construction Administration and Insurance.
33. Remove and stack existing hydrants or abandoned infrastructure.
34. Restoration including gravel and pavement not covered by other bid items.
35. Installation of Bends, tees, couplings and other fittings and thrust restraint.
36. Removal of concrete roadway not covered under other bid items.
37. Short duration shut down work at night.
38. Flagging detail found necessary by the contractor beyond estimated quantity under the bid schedule.

1.9 DESCRIPTION OF PAY ITEMS

A. The following sections describe the measurement of and payment for the work to be done under the respective items listed in the Bid Form.
B. Each unit or lump-sum price stated in the Bid Form shall constitute full compensation, as herein specified, for each item of the work completed.

Item No. 203.25 - Granular Borrow

A. Method of Measurement: The number of cubic yards of granular borrow to be measured for payment under Item No. 203.25 shall be the actual number of cubic yards placed as requested by and/or authorized by the Engineer as measured in place, at a maximum trench width of 3 feet.
B. Basis of Payment: Granular borrow shall be paid for at the unit price per cubic yards stated in the Bid Schedule. Said unit price shall be full compensation for furnishing all materials, labor, tools and construction equipment; and for all other work and expenses incidental thereto.

Item No. 652.38 - Flagger

A. Method of Measurement: The quantity of flagging to be paid for under Item No. 652.38 shall be the actual number hours to provide flagging detail.
B. Basis of Payment: Flagging shall be paid for at the unit price per hour in the Bid Schedule. Said unit price shall be full compensation for providing all labor and equipment necessary for all work and expenses incidental thereto. Quantities beyond engineer's estimate stated in the bid schedule shall be covered as incidental to the work.

Item No. 803.01 - Test Pits

A. Method of Measurement: The quantity to be paid for under Item No. 803.01 shall be the actual number of exploratory excavations as authorized by the Engineer.
B. Basis of Payment; Test pit excavations shall be paid for at the unit price per each as stated in the Bid Schedule. Said unit price shall be full compensation for furnishing all labor, tools, and equipment; for backfilling and compacting; for temporary pavement; and for all other work and expenses incidental thereto.

Item Nos. 822.322, 822.34, and 822.36 - Install 6-inch, 8-inch and 12-inch Class 52 Ductile Iron Water Mains, All Depths

A. Method of Measurement: The quantity of water main (including hydrant branch piping) to be paid for under Item Nos. 822.322, 822.34, and 822.36 shall be the actual length in feet as measured along the center line of the pipe as laid including all fittings, connections and valves.
B. Basis of Payment: Water main shall be paid for at the unit price per linear foot stated in the Bid Schedule. Said unit price shall be full compensation for installing all pipes, pipe fittings (except valves), required for the installation of the pipelines; for clearing and grubbing; for cutting trees to required length; for dewatering; for installing the pipelines; for excavating, laying, setting, and jointing all pipes and fittings; haunching and initial backfill; for backfilling; for furnishing and placing all gravel required in areas of gravel shoulder; for compaction; for pressure testing and disinfecting water main; for thrust blocks; for restraining joints; for furnishing and placing all temporary and/or permanent sheeting and bracing; for all labor, tools and construction equipment; for all connections to the existing water mains unless otherwise paid for; and for all other work and expenses incidental thereto.
C. Payment in the amount of 25% will be withheld until testing and disinfecting the respective length of water main is complete.

Item Nos. 823.31, 823.325 and 823.331 - Install 12-inch, 8-inch and 6-inch Gate Valves with Boxes

A. Method of Measurement: The quantity of gate valves and boxes installed to be paid for under Item Nos. 823.31, 823.325 and 823.331 shall be the actual number of valves and valve boxes installed complete in place.
B. Basis of Payment: Gate valves shall be paid for at the unit price per each stated in the Bid Schedule. Said unit price shall be full compensation for furnishing all labor, equipment, and tools; for installing, setting, and jointing; for restraining joints; for testing all valves and valve boxes; and for all other work and expenses incidental thereto.

Item No. 823.34 - 2-inch gate valve with box (manual air release assembly)

A. Method of Measurement: The quantity of manual air release assemblies to be paid for under Item No. 823.34 shall be the actual number installed complete in place.
B. Basis of Payment: Manual air release assemblies shall be paid for at the unit price each stated in the Bid Schedule. Said unit price shall be full compensation for furnishing all labor, equipment, and tools; for installing, setting and jointing for excavation; for all thrust blocks; restraining joints; for the main line tap and box, pipe and connections; and of all other work and expenses incidental thereto.

Item No. 824.30 - Install Fire Hydrants

A. Method of Measurement: The quantity of hydrants to be paid for under Item No. 824.30 shall be the actual number installed complete in place.
B. Basis of Payment: Hydrants shall be paid for at the unit price each stated in the Bid Schedule. Said unit price shall be full compensation for furnishing all labor, equipment, and tools; for installing, setting and jointing for excavation; for all thrust blocks; restraining

joints; for installing the hydrant and furnishing and installing drainage material; and of all other work and expenses incidental thereto.

Item No. 824.31 - Remove Fire Hydrants

A. Method of Measurement: The quantity of hydrants removed to be paid for under Item No. 824.31 shall be the actual number removed.
B. Basis of Payment: Removed hydrants shall be paid for at the unit price each stated in the Bid Schedule. Said unit price shall be full compensation for furnishing all labor, equipment, and tools; for removing and stacking at a District approved location.

Item Nos. 825.33 and 825.32 - Install Corporation Stops and Taps - 1-inch and 2-inch

A. Method of Measurement: Quantity of corporation stops and taps to be paid for under Item Nos. 825.33 and 825.322 shall be the actual number installed for service connections.
B. Basis of Payment: Corporation stops and taps shall be paid for at the unit price per each stated in the Bid Schedule. Said unit price shall be full compensation for all labor, equipment, and tools necessary for the installation of the corporation stops; tapping the main; and for all of the work and expenses incidental thereto.

Item No. 825.331 and 825.322 - Install Curb Stops - 1-inch and 2-inch

A. Method of Measurement: The quantity of curb stops and boxes to be paid for under Item Nos. 825.331 and 825.322 shall be the actual number installed.
B. Basis of Payment: Curb stops and boxes shall be paid for at the unit price per each stated in the Bid Schedule. Said unit price shall be full compensation for all labor, equipment, tools and other materials required for the installation of the curb stop and box; for trench dewatering; for excavating and backfilling; for replacing or rebuilding shrubs, fences, lawns, trees, and other materials except other such items specifically included in the Bid Schedule; and for all other work and expenses incidental thereto.

Item Nos. 825.43 and 825.42 - Install Copper Service Pipe - 1-inch and 2-inch

A. Method of Measurement: The quantity of service pipe to be paid for under Item Nos. 825.43 and 825.42 shall be the actual length in feet as measured along the center line of the pipe as laid.
B. Basis of Payment: Service pipe shall be paid for at the unit price per linear foot stated in the Bid Schedule. Said unit price shall be full compensation for all labor, equipment, tools, and other materials required for the installation of service pipes; for trench dewatering; for excavating, laying, setting, and jointing all pipes and fittings; for cleaning, testing, and disinfecting; for backfilling; for replacing or rebuilding shrubs, fences, lawns, trees, or other materials, except other such items specifically included in the Bid Schedule; and for all other work and expenses incidental thereto.

Item No. 827.303 - Unsuitable Material Excavated Below Grade

A. Method of Measurement: Quantity to be paid for under Item No. 827.303 shall be the actual number of cubic yards of material so excavated as instructed by the Engineer before excavation.
B. Basis of Payment: Unsuitable material excavated below grade shall be paid for at the unit price per cubic yard stated in the Bid Schedule. Maximum trench width of 3-feet. Said unit

price shall be full compensation for furnishing all labor, equipment, and tools necessary for the excavation of unsuitable material below grade including the disposal of surplus materials; furnishing and placing replacement suitable material; and for all other work and expenses incidental thereto.

Item No. 827.304 - Ledge Excavation (Trench Method)

A. Method of Measurement: The quantity of ledge excavation to be paid for under Item No. 827.304 shall be the actual number of cubic yards of ledge removed within the limits of normal excavation. For pipelines, the limits are defined by the vertical planes at a distance 3 feet apart (trench width) and to a depth of 6 inches below the bottom of the pipe. For structures, the limits are defined as 2 feet beyond (horiz) the finished structure footing and 1 foot below the bottom of the footing or floor. Field measurements for computing ledge volumes shall be determined by one of the following methods as selected by the Engineer.
   1. From ledge profile of exposed surface.
   2. By field measurements of the length of the trench ledge excavated and the trench limits for depth and width depth as determined by the field representative.
   3. The volume of ledge shall be determined from their average length, width, and depth as measured by the field representative. Boulders more than 2 cubic yards in volume shall be paid for as ledge.

B. Basis of Payment: Ledge excavation and disposal shall be paid for at the unit price per cubic yard as stated in the Bid Schedule. Said unit price shall be full compensation for furnishing all materials, labor, tools, and equipment; for disposal of ledge; for furnishing and placing replacement granular borrow material; for conducting all preblast surveys and investigations; for repairing all overblast; for repairing all pavement damage outside the payment widths for paving; and for all other work and expenses incidental thereto.

END OF SECTION

SECTION 01200

PROJECT MEETINGS

PART 1 - GENERAL

1.1 DESCRIPTION

A. Work Included: To enable orderly review during progress of the work, and to provide for systematic discussion of problems, the Engineer will conduct project meetings throughout the construction period.

B. Related work described elsewhere: The Contractor's relations with his subcontractors and materials suppliers and discussions relative thereto, are the Contractor's responsibility and are not part of project meetings content.

1.2 QUALITY ASSURANCE

A. Persons designated by the Contractor to attend and participate in the project meetings shall have all required authority to commit the Contractor to solutions agreed upon in the project meetings.

1.3 SUBMITTALS

A. Agenda items: To the maximum extent practicable, advise the Engineer at least 24 hours in advance of project meetings regarding all items to be added to the agenda.

B. Minutes: The Engineer will compile minutes of each project meeting and will furnish a copy to the Contractor. The Contractor may make and distribute such other copies as he wishes.

PART 2 - PRODUCTS

(No products are required in this Section.)

PART 3 - EXECUTION

3.1 MEETING SCHEDULE

A. Except as noted below for Preconstruction Meeting, project meetings will be held monthly. Coordinate as necessary to establish mutually acceptable schedule for meetings.

3.2 MEETING LOCATION

A. To the maximum extent practicable, meetings will be held at the job site.

3.3 PRECONSTRUCTION MEETING

A. Preconstruction meeting will be scheduled within twenty days after the Effective Date of the Agreement, but before the Contractor starts work at the site. Provide attendance by authorized representatives of the Contractor and all major

subcontractors. The Engineer will advise other interested parties and request their attendance.

B. Minimum agenda: Distribute data on, and discuss:
   1. Identification of key project personnel for Owner, Engineer, Contractor, funding/regulatory Agencies.
   2. Responsibilities of Owner, Engineer, Resident Project Representative, Contractor.
   3. Channels and procedures for communications.
   4. Construction schedule, including sequence of critical work.
   5. Easements, permits.
   6. Contract Documents, including distribution of required copies of original documents and revisions.
   7. Processing of Shop Drawings and other data submitted to the Engineer for review.
   8. Processing of field decisions and Change Orders.
   9. Rules and regulations governing performance of the Work, including funding/regulatory Agency requirements.
   10. Procedures for safety and first aid, security, quality control, housekeeping, and other related matters.

3.4 PROJECT MEETINGS

A. Attendance: To the maximum extent practicable, assign the same person or persons to represent the Contractor at project meetings throughout progress of the Work. The Superintendent shall attend. Subcontractors, materials suppliers, and others may be invited to attend those project meetings in which their aspects of the Work are involved.

B. Minimum agenda:
   1. Review, revise as necessary, and approved minutes of previous meeting.
   2. Review progress of the Work since last meeting, including status of submittals for approval.
   3. Review schedule of work to be accomplished prior to next meeting.
   4. Discuss monthly partial payment request.
   5. Review status of change order requests and Work Directive Changes.
   6. Identify problems which impede planned progress.
   7. Develop corrective measures and procedures to regain planned schedule.
   8. Complete other current business.

END OF SECTION

SECTION 01310

CONSTRUCTION SCHEDULES

PART 1 - GENERAL

1.1 DESCRIPTION

A. Work Included: Within ten (10) days after the effective date of the Agreement between Owner and Contractor submit to the Engineer an estimated progress schedule as specified herein.

B. Form of Schedules:
   1. Narrative: Completely describe the construction methods to be employed.
   2. Network Analysis System:
      a. Provide a separate horizontal schedule line for each trade or operation and show concurrent and preceding activities.
      b. Present in chronological order the beginning of each trade or operation showing duration and float time.
      c. Scale: Identify key dates and allow space for updating and revision.
   3. Mathematical Analysis:
      a. A mathematical analysis shall accompany the network diagram. A computer printout will be acceptable.
      b. Information shall be included on activity numbers, duration, early start, late start, etc. and float times.

C. Content of Schedules:
   1. Provide complete sequence of construction by activity:
      a. Shop Drawings, Project Data and Samples:
         1) Submittal dates.
         2) Dates reviewed copies will be required.
      b. Decision dates for:
         1) Products specified by allowances.
         2) Selection of finishes.
      c. Estimated product procurement and delivery dates.
      d. Dates for beginning and completion of each element of construction.
   2. Identify work of separate phases and logically grouped activities.
   3. Show the projected percentage of completion for each item of work as of the first day of each month.
   4. Provide separate sub-schedules, if requested by the Engineer, showing submittals, review times, procurement schedules, and delivery dates.

D. Updating:
   1. Show all changes occurring since previous submission.
   2. Indicate progress of each activity, show completion dates.
   3. Include:
      a. Major changes in scope.
      b. Activities modified since previous updating.

c. Revised projections due to changes.
d. Other identifiable changes.

4. Provide narrative report, including:
   a. Discussion of problem areas, including current and anticipated delay factors.
   b. Corrective action taken, or proposed.
   c. Description of revisions that may affect schedules.

1.2 SUBMITTALS

A. Submit updated schedules with each progress payment request.
B. Submit 4 copies of initial and updated schedules to the Engineer.

END OF SECTION

SECTION 01320

SAFETY AND HEALTH PLAN

PART 1 - GENERAL

1.1 DESCRIPTION

A. Work Included:

1. The Contractor shall be solely responsible for initiating, maintaining and supervising all safety precautions and programs in connection with the work, as outlined herein and in the General and Special Conditions of the Contract Documents. Within (10) days after the effective date of the Agreement between Owner and Contractor, submit to the Engineer a Safety and Health Plan as specified herein.
2. Contractor shall comply with all applicable Laws and Regulations related to the safety of persons or property, or for the protection of persons or property from damage, injury, or loss; and shall erect and maintain all necessary safeguards for such safety and protection.
3. Contractor shall designate a qualified and experienced safety representative (OSHA defined "Competent Person") at the site whose duties and responsibilities shall be the prevention of accidents and maintaining and supervising of safety precautions and programs, including a "Job Hazards Analysis".

B. Content of Safety and Health Plan:

1. Prepare complete safety and health plan in accordance with the requirements of CFR Title 29 Part 1926 - Safety and Health Regulations for Construction.
   a. Provide documentation that Contractor's hazardous communication program is up to date.
   b. Provide documentation that Contractor's safety training is up to date.
   c. Prepare a project specific Safety and Health Plan addressing construction safety issues, including but not limited to excavations, fall protection and egress, as well as provisions for construction in hazardous environmental conditions at the wastewater treatment facility. The hazardous environmental conditions at the wastewater treatment facility include, but are not limited to, confined space entry, electrically-classified spaces, and chemical storage and handling areas, to name a few.
2. Safety provisions for confined space entry shall follow General Industry Standard CFR Title 29 Part 1910.146 and will be incorporated into the Safety and Health Plan.
   a. The Owner has provided Table 1 at the end of this section listing confined space locations which may be encountered during the execution of this Contract. Spaces listed as Permit Required Confined Space may only be entered with a permit, alternate procedures (1910.146 (c) (5)), or reclassification to non-permit required confined space (1910.146 (c) (7)). The Contractor is required to perform a site evaluation to identify all

hazards and potential hazards in work areas whether included in Table 1 or not, prior to control of site.

b. The Contractor shall be responsible for all aspects of construction site safety including development of appropriate confined space entry procedures. The plan shall include, but not necessarily be limited to, the following:
   - Definitions
   - Confined Space Evaluations
   - Equipment Selection
   - Confined Space Entry Training Documentation
   - Permit Required Confined Space Entry Requirements
   - Testing (Monitoring) and Ventilation
   - Confined Space Entry Permit Form
   - Rescue and Emergency Procedures
   - Emergency Contact Information

c. The Contractor shall inform the Owner and Engineer's representative whenever work will be performed in a confined space and the permit space program that the Contractor will follow.

d. The Contractor shall inform the Owner and Engineer's representative of any hazards confronted or created during entry operations, either through a briefing or during the entry operation.

e. The Contractor will coordinate entry operations with the Owner when both Owner personnel and Contractor personnel will be working in or near permit spaces.

f. The Owner, Engineer, their representatives, independent testing laboratories and government agencies, when inspecting the site, shall be supplied by the Contractor proper safety equipment when entry into a confined space is required.

3. The Owner has provided Table 2 at the end of this section listing electrically-classified spaces where the Contractor may be required to carry out work tasks. The Contractor is required to perform a site evaluation to identify all hazards and potential hazards in work areas whether included in Table 2 or not, prior to control of site. Contractor shall implement appropriate safety precautions and/or construction practices to comply with classification requirements. Contractor shall ensure that all employees and subcontractors working in these areas have received appropriate training and are properly equipped in accordance with Contractor's Safety and Health Plan.

4. The Owner has provided Table 3 at the end of this section listing chemical storage and handling spaces where the Contractor may be required to carry out work tasks. The Contractor is required to perform a site evaluation to identify all hazards and potential hazards in work areas whether included in Table 2 or not, prior to control of site. Contractor shall ensure that all employees and subcontractors working in these areas have received appropriate training and are properly equipped in accordance with Contractor's Safety and Health Plan.

C. Updating:
   1. Contractor shall be responsible for updating the Safety and Health Plan as appropriate throughout the course of the construction period.

1.2 SUBMITTALS

A. **Contractor shall be responsible for all aspects of construction site safety.** Provide 3 copies of the Contractor's site specific Safety and Health Plan to the Engineer. The Safety and Health Plan is provided for information only to inform the Owner, Engineer (and Resident Project Representative) of the project specific safety program requirements. The Contractor will overview the plan with the Owner (and staff), Engineer (and Resident Project Representative) at the beginning of the project, and subsequently when the safety plan is updated.

B. Provide updated Safety and Health Plans as necessary during the course of the project.

C. Contractor's most current Safety and Health Plan shall be available at the construction site throughout the construction project.

1.3 ON-SITE COORDINATION MEETINGS

A. Contractor shall review key aspects of Safety and Health Plan at the Pre-Construction Meeting, and subsequent on-site safety informational meeting.

B. Contractor shall report to Engineer and Owner at each progress meeting concerning compliance with the Safety and Health Plan for the most recent construction period and new considerations and requirements for the upcoming period.

C. Contractor shall hold weekly on-site coordination meetings with Resident Project Representative and Owner to ensure that Owner's staff is aware of key Safety and Health Plan requirements of the current phase of construction.

END OF SECTION

SECTION 01340

SUBMITTALS

PART 1 - GENERAL

1.1 DESCRIPTION

A. Work Included:
   1. Submit to the Engineer, Shop Drawings, Operation and Maintenance Manuals, Manufacturers' Certificates, Project Data, and Samples required by the Specification Sections.

B. Related Work Specified Elsewhere:
   1. Construction Schedules: Section 01310
   2. Project Record Documents: Section 01720
   3. General Conditions: Section 00700.

1.2 SHOP DRAWINGS

A. Shop Drawings are required for each and every element of the work. Each shop drawing shall be assigned a sequential number for purposes of easy identification, and shall retain its assigned number, with appropriate subscript, on required resubmissions.

B. Shop Drawings are generally defined as all fabrication and erection drawings, diagrams, brochures, schedules, bills of material, manufacturers data, spare parts lists, and other data prepared by the Contractor, his subcontractors, suppliers, or manufacturers which illustrate the manufacturer, fabrication, construction, and installation of the work, or a portion thereof.

C. The Contractor shall submit to the Engineer a minimum of six (6) copies of Shop Drawings and approved data. The Engineer will retain three (3) copies (for Owner's, Engineer's and Field Representative's files) and return three (3) copies to the Contractor for distribution to subcontractors, suppliers and manufacturers. If the Contractor requires more than three (3) then the number of copies submitted shall be adjusted accordingly. The only exception to the above is that all shop drawings which incorporate blue line type drawings shall be submitted with only one good quality reproducible. The Engineer will return the one marked up reproducible to the Contractor.

D. The Contractor shall provide a copy of the completed Submittal Certification Form (copy provided for Contractor's use at the end of this Specification Section) which shall be attached to every copy of each shop drawing. Shop Drawings shall show the principal dimensions, weight, structural and operating features, space required, clearances, type and/or brand of finish or shop coat, grease fittings, etc., depending on the subject of the drawing. When it is customary to do so, when the dimensions are of particular importance, or when so specified, the drawings shall be certified by the manufacturer or fabricator as correct for the work.

E. Shop Drawings shall be submitted as a complete package by specification section, unless otherwise reviewed and approved by the Engineer. It is the intent that all

information, materials and samples associated with each specification section be included as a single submittal for the Engineer's review. Any deviation from this requirement, such as submitting miscellaneous metals grouped by structure, shall be requested in writing prior to any associated submittal.

F. The Contractor shall be responsible for the prompt and timely submittal of all shop and working drawings so that there shall be no delay to the work due to the absence of such drawings.

G. No material or equipment shall be purchased or fabricated especially for the Contract until the required shop and working drawings have been submitted as hereinabove provided and reviewed for conformance to the Contract requirements. All such materials and equipment and the work involved in their installation or incorporation into the Work shall then be as shown in and represented by said drawings.

H. Until the necessary review has been made, the Contractor shall not proceed with any portion of the work (such as the construction of foundations), the design or details of which are dependent upon the design or details of work, materials, equipment or other features for which review is required.

I. All shop and working drawings shall be submitted to the Engineer by and/or through the Contractor, who shall be responsible for obtaining shop and working drawings from his subcontractors and returning reviewed drawings to them. Shop drawings shall be of standardized sizes to enable the Owner to maintain a permanent record of the submissions. Approved standard sizes shall be: (a) 24 inches by 36 inches; (b) 11 inches by 17 inches, and (c) 11 inches by 8-1/2 inches. Provision shall be made in preparing the shop drawings to provide a binding margin on the left hand side of the sheet. Shop drawings submitted other than as specified herein may be returned for resubmittal without being reviewed.

J. Only drawings which have been checked and corrected by the fabricator should be submitted to the Contractor by his subcontractors and vendors. Prior to submitting drawings to the Engineer, the Contractor shall check thoroughly all such drawings to satisfy himself that the subject matter thereof conforms to the Drawings and Specifications in all respects. All drawings which are correct shall be marked with the date, checker's name, and indication of the Contractor's approval, and then shall be submitted to the Engineer.

K. If a shop drawing shows any deviation from the Contract requirements, the Contractor shall make specific mention of the deviations in his letter of transmittal.

L. Should the Contractor submit equipment that requires modifications to the structures, piping, electrical conduit, wires and appurtenances, layout, etc., detailed on the Drawings, he shall also submit details of the proposed modifications. If such equipment and modifications are accepted, the Contractor, at no additional cost to the Owner, shall do all work necessary to make such modifications.

M. A maximum of two submissions of each Shop Drawing will be reviewed, checked, and commented upon without charge to the Contractor. Any additional submissions which are ordered by the Engineer to fulfill the stipulations of the Drawings and Specifications, and which are required by virtue of the Contractor's neglect or failure to comply with the requirements of the Drawings and

Specifications, or to make those modifications and/or corrections ordered by the Engineer in the review of the first two submissions of each Shop Drawing, will be reviewed and checked as deemed necessary by the Engineer, and the cost of such review and checking, as determined by the Owner, and based upon Engineer's documentation of time and rates established for additional services in the Owner-Engineer Agreement for this Project, may be deducted from the Contractor to make all modifications and/or corrections as may be required by the Engineer in an accurate, complete, and timely fashion.

1.3 SAMPLES

A. The Contractor shall submit samples when requested by the Engineer to establish conformance with the specifications, and as necessary to define color selections available.

1.4 OPERATION AND MAINTENANCE MANUALS

A. The Contractor shall furnish the Engineer four (4) copies of a complete instruction manual for installation, operation and maintenance of each item specified. At least 3 months prior to the expected substantial completion date, the Contractor shall submit to the Engineer all manuals in accordance with the requirements specified herein.

B. Manuals shall include operating and maintenance information on all systems and pieces of equipment. The manual shall contain sufficient data to install, operate, maintain and repair all components of the equipment, design data specific to the project. All information required by the Operations and Maintenance Manual Certification Form described herein and any additional information deemed necessary by the Owner and Engineer for proper installation, operation and maintenance.

C. The Contractor shall provide a copy of the complete Operations and Maintenance Manual Certification Form (copy provided for the Contractor's use at the end of this Specification Section) which shall be attached to every copy of each Operations and Maintenance Manual submitted.

1.5 MANUFACTURER'S CERTIFICATES

A. Prior to accepting the installation, the Contractor shall submit manufacturer's certificates for each item specified.

B. Such manufacturer's certificates shall state that the equipment has been installed under either the continuous or periodic supervision of the manufacturer's authorized representative, that it has been adjusted and initially operated in the presence of the manufacturer's authorized representative, and that it is operating in accordance with the specified requirements, to the manufacturer's satisfaction. All costs for meeting this requirement shall be included in the Contractor's bid price.

1.6 SUBMISSION REQUIREMENTS

A. Accompany submittals with transmittal letter, containing:

1. Date.

2. Project title and number.
3. Contractor's name and address.
4. The number of each Shop Drawing, Project Data and Sample submitted.
5. Notification of deviations from Contract Documents.
6. Other pertinent data.

B. A completed Submittal Certification Form shall be attached to each copy of each shop drawing and must include:
   1. Identification of deviations from Contract Documents.
   2. Contractor's stamp, initialed or signed, certifying review of the submittal, verification of field measurements and compliance with Contract Documents.
   3. Where specified or when requested by the Engineer, manufacturer's certification that equipment, accessories and shop painting meet or exceed the Specification requirements.
   4. Where specified, manufacturer's guarantee.

1.7 RESUBMISSION REQUIREMENTS

A. Revise initial drawings as required and resubmit as specified for initial submittal.
B. Indicate on drawings any changes which have been made other than those required by Engineer.

1.8 ENGINEER'S REVIEW

A. The review of shop and working drawings hereunder will be general only, and nothing contained in this specification shall relieve, diminish or alter in any respect the responsibilities of the Contractor under the Contract Documents and in particular, the specific responsibility of the Contractor for details of design and dimensions necessary for proper fitting and construction of the work as required by the Contract and for achieving the result and performance specified thereunder.

SUBMITTAL CERTIFICATION FORM

PROJECT: _____ CONTRACTOR'S PROJ. NO: _____

CONTRACTOR: _____ ENGINEER'S PROJ. NO: _____

ENGINEER: _____

TRANSMITTAL NUMBER: _____ SHOP DRAWING NUMBER: _____

SPECIFICATION SECTION OR DRAWING NO: _____

DESCRIPTION: _____

MANUFACTURER: _____

The above referenced submittal has been reviewed by the undersigned and I/we certify that the material and/or equipment meets or exceeds the project specification requirements with

☐ NO DEVIATIONS

or

☐ A COMPLETE LIST OF DEVIATIONS AS FOLLOWS[a]:

_____

_____

_____

_____

_____

By: _____ By: _____

Contractor[b] Manufacturer[c]

Date: _____ Date: _____

[a] Any deviations not brought to the attention of the Engineer for review and concurrence shall be the responsibility of the Contractor to correct, if so directed.

[b] Required on all submittals

[c] When required by specifications

Page ___ of ___

General Contractor's Stamp

END OF SECTION

SECTION 01370

SCHEDULE OF VALUES

PART 1 - GENERAL

1.1 DESCRIPTION

A. Extent of Work:
   1. Provide a detailed breakdown of the agreed Contract Sum showing values allocated to each of the various parts of the Work, as specified herein and in other provisions of the Contract Documents.

B. Related Work Specified Elsewhere:
   1. Documents affecting work of this Section include, but are not necessarily limited to, General Conditions, and Sections of these Specifications.
   2. Schedule of values is required under the General Conditions.
   3. Schedule of values is required to be compatible with applications for progress payment.

1.2 QUALITY ASSURANCE

A. Use required means to assure arithmetical accuracy of the sums described.

B. When so required by the Engineer, provide copies of the subcontracts or other data acceptable to the Engineer substantiating the sums described.

1.3 SUBMITTALS

A. Prior to first application for payment, submit a proposed schedule of values to the Engineer.
   1. Secure the Engineer's approval of the schedule of values prior to submitting first application for payment.

END OF SECTION

SECTION 01400

QUALITY CONTROL

PART 1 - GENERAL

1.1 REQUIREMENTS INCLUDED

A. General Quality Control.
B. Workmanship.
C. Manufacturer's Instructions.
D. Manufacturer's Certificates.
E. Manufacturer's Field Services.
F. Testing Laboratory Services.

1.2 RELATED REQUIREMENTS

A. Section 00700 - General Conditions: Inspection and testing required by governing authorities.
B. Section 01340 - Submittals: Submittal of Manufacturer's Instructions.
C. Section 02200 - Earthwork.
D. Section 02201 - Excavation and Embankment.
E. Section 02250 - Trench Backfilling, Compaction Control and Testing.
F. Section 02300 - Foundation Piles.
G. Section 03300 - Cast-in-Place Concrete.
H. Section 03305 - Concrete Testing.
I. Section 04200 - Masonry.
J. Section 05120 - Structural Steel.
K. Section 15064 - Stainless Steel Piping.

1.3 QUALITY CONTROL

A. Maintain quality control over suppliers, manufacturers, products, services, site conditions, and workmanship, to produce work of specified quality.

1.4 WORKMANSHIP

A. Comply with industry standards except when more restrictive tolerances or specified requirements indicate more rigid standards or more precise workmanship.
B. Perform work by persons qualified to produce workmanship of specified quality.
C. Secure products in place with positive anchorage devices designed and sized to withstand stresses, vibration, and racking.

1.5 MANUFACTURERS' INSTRUCTIONS

A. Comply with instructions in full detail, including each step in sequence. Should instructions conflict with Contract Documents, request clarification from Engineer before proceeding.

1.6 MANUFACTURERS' CERTIFICATES

A. When required by individual Specifications Section, submit manufacturer's certificate that products meet or exceed specified requirements.

1.7 MANUFACTURERS' FIELD SERVICES

A. When specified in respective Specification Sections, require supplier and/or manufacturer to provide qualified personnel to observe field conditions, conditions of surfaces and installation, quality of workmanship, start-up of equipment, test, adjust and balance of equipment as applicable, and to make appropriate recommendations.

B. Representative shall submit written report to Engineer listing observations and recommendations.

1.8 TESTING LABORATORY SERVICES

A. Owner will employ and pay for services of an Independent Testing Laboratory to perform inspections, tests, and other services wherever an Independent Testing Laboratory is required by individual specification sections listed in paragraph 1.2 above, unless otherwise indicated.

B. Services will be performed in accordance with requirements of governing authorities and with specified standards.

C. Reports will present observations and test results and indicate compliance or non-compliance with specified standards and with Contract Documents. Independent Testing Laboratory will submit one copy of each report directly to each of the following: Engineer, Resident Project Representative, Contractor. Reports will be mailed within 5 days of obtaining test results. If test results indicate deficiencies, Independent Testing Laboratory shall telephone or FAX results to Engineer, Resident Project Representative and Contractor within 24 hours.

D. Contractor shall cooperate with Independent Testing Laboratory personnel; furnish tools, samples of materials, design mix, equipment, storage and assistance as requested.

E. Contractor shall coordinate all testing work and shall notify Engineer and Independent Testing Laboratory at least 24 hours prior to performing work requiring testing services. If scheduled tests or sampling cannot be performed because the work is not ready as scheduled, testing costs associated with the delay will be determined by Engineer and invoiced by Owner to Contractor. If unpaid after 60 days, the invoice amount will be deducted from the Contract Price. If adequate notice is not provided, Contractor shall suspend work on that portion of the Project until testing can be performed. Such suspension will not be grounds for a claim against the Owner for delay, nor will it be an acceptable basis for an extension of time.

F. Payment for Independent Testing Laboratory services shall be as follows:

1. General: Where testing is the Owner's responsibility, payment will be made as stated below unless other requirements are given in Specification Sections. Testing which is the responsibility of the Contractor will be considered an

incidental item unless otherwise indicated in Section 01150, Measurement and Payment.

2. Initial Testing: Owner will pay for initial tests.
3. Retesting: Costs of retesting due to non-compliance will be paid by Owner. The cost of retesting will be determined by Engineer and Owner will invoice Contractor for this cost. If unpaid after 60 days, the invoice amount will be deducted from the Contract Price.
4. Contractor's Convenience Testing: Inspections and tests performed for Contractor's convenience will be paid for by Contractor.

PART 2 - PRODUCTS

Not Used

PART 3 - EXECUTION

Not Used

END OF SECTION

SECTION 01546

USE OF EXPLOSIVES

PART 1 - GENERAL

1.1 DESCRIPTION

A. Work Included:
   1. Provide all materials and perform all work necessary to ensure safe use and storage of explosives.
   2. Contractor shall be responsible for any and all damage resulting from use of explosives.
   3. Perform a pre-blast survey of all structures in the proximity of the blasting area to determine pre-blast conditions.
   4. Perform monitoring, documentation and record keeping during blasting.

1.2 QUALITY ASSURANCE

A. Requirements of regulatory agencies: Conduct all blasting in accordance with all applicable local and state laws, ordinances and code requirements.

B. Qualifications: The Subcontractor utilized for the blasting operations shall be licensed specialty drilling and blasting contractor with 5-years experience. The Contractor shall submit qualifications and references of the proposed Subcontractor for review and no exceptions shall be taken by the Engineer. All blasting operations completed on this project shall be performed by a single firm.

PART 2 - PRODUCTS

2.1 MATERIALS

A. Explosive charges and detonation devices shall be of a type suitable for the intended use.

B. Store all explosives in a secure manner, in compliance with all State and local laws and ordinances, and legibly mark all such storage places. Storage shall be limited to such quantity as may be needed for the work underway.

PART 3 - EXECUTION

3.1 PERFORMANCE - GENERAL

A. Designate as a BLASTING AREA all sites where electric blasting caps are located and where explosive charges are being placed.

B. Mark all blasting areas with signs as required by law.

C. Place signs, as required by law, at each end of the blasting area and leave in place while the above conditions prevail. Immediately remove signs after blasting operations or the storage of caps is over.

D. Perform a pre-blast survey of structures in the proximity of the blasting area to determine pre-blast conditions. The Contractor shall employ the services of an

independent firm to conduct the a pre-blast survey of the condition of adjacent structures. The pre-blast survey shall include a video and photographic record of the interior and exterior of all structures within a 500-foot radius of the work area. The Contractor shall provide the Owner and Engineer with 72-hours written notice prior to the initiation of the pre-blast survey and shall allow for the Owner and/or Engineer to be present during the survey. The pre-blast survey records shall be made available to the Owner and Engineer upon request. The cost of the pre-blast survey shall be incidental to the unit price bid item.

E. Notify each property owner and public utility company having structures within a 500-foot radius of the site of the work sufficiently in advance to enable the owners and companies to take such steps as they may deem necessary to protect their property. Notice shall be published in a local paper no more than 30 days nor less than 10 days prior to the initiation of the blasting. Notice shall be given to property owners within the 500-foot radius at least 10 days prior to blasting that pre-blast surveys are available. Such notice shall not relieve the Contractor of any of his responsibility for damage resulting from his blasting operation.

F. Warn all persons within the danger zone of blasting operations and do not perform blasting work until the area is cleared. Provide sufficient flagmen outside the danger zone to stop all approaching traffic and pedestrians.

G. Provide watchmen during the loading period and until charges have been exploded.

H. Provide adequate protective covering over all charges prior to explosion.

I. Prepare and submit a blasting plan prior to the commencement of the blasting operations. The blasting plan shall include proposed sketches of the location of each blast, drill patterns, delay periods, and decking. The plan should also indicate the type and amount of explosives to be used, including weight of explosives per delay, stemming, critical dimensions and the location and general description of structures to be protected.

J. Control blasting by limiting the charge weight per delay to that which produces limited levels of ground vibrations as herein specified. The Contractor shall hire a qualified testing agency to measure particle velocities and frequencies using seismograph. Peak particle velocity and frequency shall be the measures of the level of vibration. Vibration monitoring shall be performed at all structures within 100-feet of the blast.

L. Drilling and blasting operations are limited to the hours from 7am to 5pm and shall be limited to Monday through Saturday.

3.2 PERFORMANCE - CONTROLLED BLASTING AREAS

A. Blasting in "Controlled Blasting" areas shall meet all of the criteria identified above in addition to the additional criteria identified below. Controlled blasting shall be performed in areas where residences or businesses are within 100-feet of the blast area or as shown on the Drawings or specified herein.

B. Controlled blasting shall consist of more closely spaced holes with lesser amount of explosives to reduce rock overbreak and vibration.

3.3 DOCUMENTATION AND RECORD KEEPING

A. Prepare and maintain copies of all blasting logs which shall include, but not be limited to, the following information:
   1. Date, time and location of blast.
   2. Diagram of blast pattern showing the number of holes with delay number and charge by weight per hole.
   3. Blast evaluations.
   4. Weather and cloud conditions.

B. Prepare and maintain vibration measurement records which shall include, but not be limited to, the following information:
   1. Identification of instrument.
   2. Name of instrument operator.
   3. Structure at which the geophone is located.
   4. Distance and direction of geophone from blast site.
   5. Date and time of reading.
   6. Type of ground at recording station.
   7. Peak particle velocity and frequency for all components as well as resultant.
   8. Copies of seismograph readings.

C. Blast logs and vibration measurement records shall be made available to Owner and/ or Engineer upon request.

END OF SECTION

SECTION 01562

DUST CONTROL

PART 1 - GENERAL

1.1 DESCRIPTIONS

A. Work Included:

1. Furnish and apply water or calcium chloride on the road surfaces within the construction site, when required to control dust and when directed by the Engineer.
2. When dust control is not included as a separate item in the Contract, the work shall be considered incidental to the appropriate items of the Contract.

PART 2 - PRODUCTS

2.1 MATERIALS

A. Water for Sprinkling:

1. Clean, free of salt, oil, and other injurious matter.

B. Calcium Chloride:

1. Meet the requirements of AASHTO M144.

PART 3 - EXECUTION

3.1 APPLICATION

A. Water:

1. Apply water by methods approved by the Engineer.
2. Use approved equipment including a tank with gauge equipped pump and spray bar.

B. Calcium Chloride:

1. Apply at a rate sufficient to maintain a damp surface but low enough to assure non-contamination of water courses.
2. Apply water prior to calcium chloride addition.

END OF SECTION

SECTION 01570

TRAFFIC REGULATION

PART 1 - GENERAL

1.1 DESCRIPTION

A. Work Included:
   1. Provide all materials and perform all work necessary to completely regulate traffic in the area of Work.
   2. Perform all work in such a manner as to provide safe passage at all times for the public and with a minimum of obstruction to traffic.
   3. Do not close roads or streets to passage of the public without the permission of the proper authorities.

B. The local police department and/or the Maine Department of Transportation will decide if safe passage is being maintained and shall have the authority to require the Contractor to take any additional steps necessary to maintain safe passage. If MDOT furnishes an inspector on the job as a result of poor traffic control by the Contractor, the Contractor shall be responsible for all costs assessed by MDOT. (State Highways)

1.2 SCHEDULING WORK

A. Schedule all work so that two adjacent parallel streets are not closed to passage by the public at any one time, if at all possible.

B. Revise the plan of work if it will create a traffic hazard or an unreasonably long detour.

C. Do not start work in any new location without the permission of the Engineer.

D. Notify all police and fire departments of all scheduled detours and when streets are reopened.

PART 2 - PRODUCTS

2.1 WARNING SIGNS AND BARRICADES

A. Provide adequate warning signs, barricades, signal lights, watchmen and take other necessary precautions for the safety of the public.

B. Provide and illuminate suitable warning signs to show where construction, barricades or detours exist.

C. Provide barricades of substantial construction and painted with a finish that increases visibility at night.

D. Keep signal lights illuminated at all barricades and obstructions from sunset to sunrise.

E. Maintain all necessary signs, barricades, lights, watchmen and other safety precautions during authorized suspension of the Work, weekends, holidays or other times when the Work is not in progress.

F. Traffic control signs for construction work shall be located and of the size and type as outlined in Manual on Uniform Traffic Control Devices for Streets and Highways as published by U. S. Department of Transportation.

2.2 UNIFORMED POLICE OFFICER

A. A uniformed police officer is a police officer (local, county or state) on regular or special duty dressed in uniform with the necessary high visibility vest and apparel needed for traffic control.

B. Arrange the police detail with the local Chief of Police, County Sheriff, or State Police Captain depending on jurisdiction, if applicable.

2.3 FLAG PERSON

A. A flag person is a trained and certified individual assigned specifically to the task of directing traffic and is outfitted in the necessary high visibility vest and apparel needed for traffic control.

B. Flag persons shall be provided by the Contractor.

PART 3 - EXECUTION

3.1 DETOURS

A. Provide, identify and maintain suitable detours when the project, or any part thereof, is closed to public travel.

B. When the closed part of the project is reopened, restore the detour area and any other disturbed areas to the original condition.

3.2 INCONVENIENCE TO RESIDENTS OF VICINITY

A. Whenever a traveled way is closed, perform the Work in such a manner that local travel and residents in the vicinity of the Work will be inconvenienced as little as possible.

B. Allow access to residents and abutting land owners along the project to driveways and other normal outlets from their property.

3.3 TRAFFIC CONTROL OFFICERS

A. Where required by the local, county or state police departments and/or when specified, traffic control officer shall be Uniformed Police Officers.

B. Where the local, county or state police departments do not wish to or are unable to furnish traffic control officers and/or when specified, the traffic control officers shall be flag person.

END OF SECTION

SECTION 01710

PROJECT CLEANING

PART 1 - GENERAL

1.1 DESCRIPTION

A. Work Included:

1. Maintain premises and public properties free from accumulations of waste, debris, and rubbish, caused by operations.
2. At completion of work, remove waste materials, tools, equipment, machinery and surplus materials, and clean all sight-exposed surfaces. Leave project clean and ready for use.

1.2 QUALITY ASSURANCE

A. Requirements of Regulatory Agencies: Conduct cleaning and disposal operations in accordance with all applicable local and state laws, ordinances, and code requirements.

PART 2 - PRODUCTS

2.1 MATERIALS

A. Use only cleaning materials recommended by manufacturer of surfaces to be cleaned.

B. Use cleaning materials only on surfaces recommended by cleaning material manufacturers.

PART 3 - EXECUTION

3.1 PERFORMANCE

A. Cleaning During Construction:

1. Execute cleaning operations to ensure that buildings, grounds, and public properties are maintained free from accumulations of waste materials and rubbish.
2. Entirely remove and dispose of material or debris during the progress of the work that has washed into or has been placed in watercourses, ditches, gutters, drains, catch basins, or elsewhere as a result of the Contractor's operations.
3. Wet down dry materials and rubbish to lay dust and prevent blowing dust.
4. At reasonable intervals during the progress of work, clean the site and dispose of waste materials, debris, and rubbish.
5. Clean interiors of buildings, when applicable, prior to finish painting, and continue to clean on an as-needed basis until buildings are ready for occupancy.
6. Handle materials in a controlled manner with as few handlings as possible. Do not drop or throw material from heights.

7. When applicable, schedule cleaning operations so that dust and other contaminants resulting from the cleaning process will not fall on wet, newly painted surfaces.

B. Control of Hazards:
1. Store volatile wastes in covered metal containers, and remove from premises daily.
2. Prevent accumulation of wastes which may create hazardous conditions.
3. Provide adequate ventilation during use of volatile or noxious substances.

C. Disposal:
1. Do not burn or bury rubbish and waste materials on project site.
2. Do not dispose of volatile wastes, such as mineral spirits, oil, or paint thinner, in storm or sanitary drains.
3. Do not dispose of wastes into streams or waterways.

D. Final Cleaning:
1. Employ experienced workmen, or professional cleaners, for final cleaning.
2. Remove grease, dust, dirt, stains, labels, fingerprints, and other foreign materials, from all sight-exposed interior and exterior finished surfaces.
3. Repair, patch and touch up marred surfaces to specified finishes.
4. Broom clean paved surfaces.
5. Rake clean non-paved surfaces of the project site.
6. Restore to their original condition those portions of the site not designated for alterations by the Contract Documents.

END OF SECTION

SECTION 01720

PROJECT RECORD DOCUMENTS

PART 1 - GENERAL

1.1 DESCRIPTION

A. Work Included:
   1. Keep accurate record documents for all additions, substitutions of material, variations in work, and any other additions or revisions to the Contract.

B. Related Work Specified Elsewhere:
   1. Shop Drawings, Project Data, and Samples are specified in "General Conditions" and Section 01340, Submittals.

1.2 MAINTENANCE OF DOCUMENTS

A. Maintain at job site, one copy of:
   1. Contract Drawings
   2. Specifications
   3. Addenda
   4. Reviewed Shop Drawings
   5. Change Orders
   6. Any other modifications to the Contract
   7. Field Test Reports

B. Store documents in files and racks specifically identified for this use, that are apart from documents used for construction.

C. File documents in a logical manner indexed for easy reference.

D. Maintain documents in clean, dry, legible condition.

E. Do not use record documents for construction purposes.

F. Make documents available at all times for inspection by the Engineer and Owner, and by the end of the project, transmit these documents to the Engineer.

1.3 RECORDING

A. Label each document "PROJECT RECORD" in large high printed letters.

B. Keep record documents current and do not permanently conceal any work until required information has been recorded.

C. General Field Recording Issues:
   1. All ties should be taken from existing, permanent features such as utility poles, corners of houses and hydrants. Porches, sheds or other house additions should be avoided for they could be torn down. A minimum of two ties should be taken.
   2. Stations should be recorded to the nearest foot.
   3. Inverts should be recorded to the nearest hundredth of a foot.
   4. Elevations should be recorded to the nearest hundredth of a foot.
   5. Building dimensions should be recorded to the nearest 1/4".

D. Project Record Drawings - Legibly mark Contract Drawings to record existing utilities and actual construction of all work, including but not limited to the following (where applicable):

1. Existing Utilities

   Water mains and services, water main gate valves, sewer mains and services, storm drains, culverts, steam lines, gas lines, tanks and other existing utilities encountered during construction must be accurately located and shown on the Drawings. In congested areas supplemental drawings or enlargements may be required.

   a. Show any existing utilities encountered in plan and profile and properly labeled showing size, material and type of utility. Ties should be shown on plan. Utility should be drawn to scale in section (horizontally and vertically) and an elevation should be called out to the nearest hundredth of a foot.
   b. When existing utility lines are broken and repaired, ties should be taken to these locations.
   c. If existing water lines are replaced or relocated, document the area involved and pipe materials, size, etc. in a note, and with ties.

2. Manholes, Catch Basins, Valve Pits and other structures.
   a. Renumber structure stationing to reflect changes.
   b. Show ties to center of structure covers or hatches.
   c. In general, show inverts at center of structures. However, for manholes with drop structures, or steep channels (greater than 0.2' change on slope), show inverts at face of manhole.
   d. Show inverts for other structures at the face of the structure.
   e. Draw any new structures that are added on plan and profile.
   f. Show any field or office redesigns.
   g. Redraw plan if the structure's location is moved more than 5 feet in any direction. [Note: It is important to show existing utilities, as outlined in Paragraph 1 above, especially if they were one reason for relocating the sewer, manholes and other structures.]
   h. Redraw profile if inverts changed by more than 6 inches.

3. Gravity Sewer Line
   a. Change sewer line slopes indicated on Drawings if inverts are changed.
   b. Draw any new gravity lines that are added on plan and profile.
   c. Show any field or office redesigns.
   d. Redraw the sewer line profile if manhole inverts are redrawn.
   e. Redraw the sewer line on plan corresponding to relocated manholes.

4. Water Mains and Force Mains
   a. Show ties to the location of all valves, bends (horizontal and vertical), tees and other fittings. The use of thrust blocks should be recorded.
   b. Revise elevations indicated on the Drawings to reflect actual construction.

5. House Services
   a. Draw all house services (even to empty lots) on plan, and show ties.

6. Ledge
   a. Ledge profiles should be shown. Note whether the plotted ledge profile reflects undisturbed or expanded conditions.
7. Yard Piping and Buried Electrical Conduit
   a. Site piping should be drawn to reflect the installed locations, with ties and elevation of all bends (horizontal and vertical).
   b. Show routing for electrical conduits and pull boxes, especially in close proximity to buildings and when the conduits change direction or cross process piping.
8. Roads
   a. Show centerline road profile and level spot elevations.
   b. Show pavement widths.
   c. On road cross sections, show the pavement cross slope.
   d. Show any deviations from the design plans.
9. Buildings
   a. In general, small changes to structures should not be redrawn. If any dimensional changes were made in the field, the numerical change should be made on the Drawing and be properly labeled. Update dimensions and elevations on Drawings.
   b. Show finished concrete elevations (top of slab, top of wall, top of footing, etc.). Redraw any foundation, frost wall, etc. that was modified, deepened, or altered during construction.
   c. Adjust finished concrete horizontal dimensions that are shown on the Drawings.
   d. Adjust structural steel elevations and horizontal dimensions that are shown on the Drawings.
   e. Show location of anchors, construction and control joints, and waterstops, when they are different from those shown on Drawings.
   f. Any additions or major changes should be shown in both plan and elevation (i.e. relocated doors, opposite door swings, change in wall location, relocation of floor drains).
   g. Show approximate location and routing of electrical conduits in walls, slabs and ceilings. Most conduits are run in groups, therefore, use range of measurements to define location for entire section of conduits.
   h. Special circuits for computers, alarms and instrumentation should be shown.
   i. Show any changes in location and elevation of ductwork and devices, fuel piping and equipment, and heat piping and equipment.
   j. Location of gravity sewer system below slabs in buildings should be shown, if changes are made in the configuration.
   k. If wall mounted electrical switches, control boxes, thermostats, etc. have been relocated significantly, (other side of door, or to a wall other than indicated diagrammatically on electrical plans) make the revision accordingly.

E. Specifications and Addenda - Legibly mark up each section to record:
   1. Manufacturer, trade name, catalog number, and supplier of each product and item of equipment actually installed.
   2. Changes made by Change Order, Field Order, or other method.

1.4 SUBMITTALS

A. At the completion of the project, deliver record documents to the District.
B. Accompany submittal with transmittal letter, in duplicate, containing:
   1. Date, project title and number.
   2. Contractor's name and address.
   3. Title and number of each record document with certification that each document is completed and accurate.
   4. Signature of Contractor, or his authorized representative.
C. Failure to supply all information on the Project Record Drawings as specified in Part 1.3 may result in additional retainage from monthly partial payment requests, and in non-approval of final payments of the Contract and/or if contract time (as specified in accordance with the Standard General Conditions of the Construction Contract) has elapsed, this shall be grounds for the enactment of the liquidated damages as specified.

END OF SECTION

DIVISION 2

SITE WORK

Scope of Work

Provide, install and test all site work and appurtenant work in complete accordance with the Drawings and Specifications.

Contractor's Duties

Except as specifically noted, provide and pay for all labor, materials, equipment, tools, machinery, water, heat, other facilities and services necessary for proper execution and completion of work.

Contents of Division

Section No.	Section Title	Page No.
02200	Earthwork	02200-1
02270	Temporary Erosion Control	02270-1
02401	Dewatering	02401-1
02485	Loaming & Seeding	02485-1
02610	Pipe & Fittings for Buried Applications - General	02610-1
02615	Ductile Iron Pipe	02615-1
02616	Ductile Iron Pipe Fittings	02616-1
02626	Copper Service Pipe	02626-1
02641	Gate Valves	02641-1
02642	Corporation Stops	02642-1
02643	Curb Stops	02643-1
02644	Hydrant Assemblies	02644-1

Section No.	Section Title	Page No.
02645	Curb Boxes	02645-1
02646	Valve Boxes	02646-1
02647	Couplings & Connectors.....	02647-1
02650	Buried Utility Markings	02650-1
02675	Cleaning, Testing and Chlorination of Water Mains.	02675-1

END OF SECTION

SECTION 02200

EARTHWORK

PART 1 - GENERAL

1.1 DESCRIPTION

A. The Work described by this Section consists of all earthwork encountered and necessary for construction of the project as indicated in the Contract Documents, and includes but is not limited to the following:
   1. Excavation
   2. Backfilling and Filling
   3. Compaction
   4. Embankment Construction
   5. Grading
   6. Providing soil material as necessary
   7. Disposal of excess suitable material and unsuitable materials

B. Related Work Specified Elsewhere: (When Applicable)
   1. The use of explosives is specified in the Supplementary Conditions section of this Contract, and in Division 1.
   2. Traffic Regulation is specified in Division 1.
   3. Clearing and Grubbing, Dewatering, Filter Fabric, Temporary Erosion Control, Stripping and Stockpiling of Topsoil, Sheeting, Landscaping, and Paving are specified in the appropriate sections of this Division.
   4. Section 01400 - Quality Control.
   5. Pipe, fittings and valves are specified in Division 2.

1.2 QUALITY ASSURANCE

A. Requirements of Regulatory Agencies:
   1. All work shall be performed and completed in accordance with all local, state and federal regulations.
   2. The General Contractor shall secure all other necessary permits unless otherwise indicated from, and furnish proof of acceptance by, the municipal and state departments having jurisdiction and shall pay for all such permits, except as specifically stated elsewhere in the Contract Documents.

B. Line and Grade:
   1. The Contractor shall establish the lines and grades in conformity with the Drawings and maintain same to properly perform the work.

C. Testing Methods:
   1. Gradation Analysis: Where a gradation is specified the testing shall be in accordance with ASTM C-117-90 and ASTM C-136-93 (or latest revision).
   2. Compaction Control:
      a) Unless otherwise indicated, wherever a percentage of compaction for backfill is indicated or specified, it shall be the in-place density divided by the maximum density and multiplied by 100. The maximum density

shall be the density at optimum moisture as determined by ASTM Standard Methods of Test for Moisture-Density Relations of Soil Using 10-lb. Hammer and 18-in. Drop, Designation D-1557-91 (Modified Proctor), or latest revision, unless otherwise indicated.

b) The in-place density shall be determined in accordance with ASTM Standard Method of Test for Density of Soil in Place by the Sand Cone method, Designation D 1556-90, (or latest revision) or Nuclear method Designation D2922.

c) Wherever specifically indicated, maximum density at optimum moisture may be determined by ASTM Standard Methods of Test for Moisture Density Relations of Soils, ASTM D-698-91 (Standard Proctor).

d) An Independent Testing Laboratory will be retained by the Owner to conduct all laboratory and field soil sampling and testing, and to observe earth work and foundation construction activities. Laboratory testing will consist of sieve analyses, natural water content determinations, and compaction tests. Field testing will consist of in-place field density tests and determination of water contents.

1.3 SUBMITTALS

A. Collection of samples and testing of all materials for submittals shall be performed by the Independent Testing Laboratory and paid for by the Contractor until the materials are approved by the Owner or Engineer.

B. Submit test results in accordance with the procedure specified in the General and Supplementary Conditions.

C. Submit test results (including gradation analysis) and source location for all borrow material to be used at least 10 working days prior to its use on the site. Contractor shall identify and provide access to borrow sites.

D. Submit moisture density curve for each type of soil (on site or borrow material) to be used for embankment construction or fill beneath structures or pavement.

1.4 TESTS

The Independent Testing Laboratory shall conform to the following procedures and standards:

A. Submit test results in accordance with the procedure specified in the General and Supplementary Conditions.

B. All testing shall be performed by a qualified Independent Testing Laboratory acceptable to the Engineer and Contractor at the Owner's expense unless otherwise indicated (see Section 01400 - Quality Control).

C. Field density tests on embankment materials shall be as follows:

1. Tests shall be taken on every 200 cubic yards of embankment material.

D. Paved Areas and Building Slab Subgrade: Make at least one field density test of subgrade for every 2,000 sq. ft. of paved area or building slab, but in no case less than 3 tests. In each compacted fill layer, make one field density test for every

2,000 sq. ft. of overlaying building slab or paved area, but in no case less than 3 tests.

E. Trenches: Field density test in trenches shall be taken at 75 linear foot intervals on every third lift.

F. Foundation Wall Backfill: Take at least one (1) field density tests per lift per wall at locations and elevations as designated by the Engineer.

G. In addition to the above tests the Independent Testing Laboratory will perform additional density tests at locations and times requested by the Engineer.

H. Additional density testing will be required by the Engineer if the Engineer is not satisfied with the apparent results of the Contractor's compaction operation.

1. If the test results fail to meet the requirements of these specifications, the Contractor shall undertake whatever action is necessary, at no additional cost to the Owner, to obtain the required compaction. The cost of retesting will be paid by Owner. The cost of retesting will be determined by Engineer and Owner will invoice Contractor for this cost. If unpaid after 60 days, the invoice amount for retesting will be deducted from the Contract Price. No allowance will be considered for delays in the performance of the work.

2. If the test results pass and meet the requirements of these Specifications, the cost of the testing service will be borne by the Owner, but no allowance will be considered for delays in the performance of the work.

1.5 JOB CONDITIONS

A. Site Information:

1. Data on indicated subsurface conditions are not intended as representations or warranties of accuracy or continuity between soil borings. It is expressly understood that Owner and Engineer will not be responsible for interpretations or conclusions drawn therefrom by the Contractor. Data are made available for the convenience of Contractor.

2. Additional test borings and other exploratory operations may be made by Contractor at no additional cost to Owner.

B. Existing Utilities and Structures:

1. The locations of utilities and structures shown on the Drawings are approximate as determined from physical evidence on or above the surface of the ground and from information supplied by the utilities. The Engineer in no way warranties that these locations are correct. It shall be the responsibility of the Contractor to determine the actual locations of any utilities or structures within the project area.

PART 2 - PRODUCTS

2.1 SOIL MATERIAL

A. Aggregate Base: PER MDOT

B. Aggregate Leveling Course and Untreated Surface Course: PER MDOT

C. Common Borrow: Shall consist of approved material required for the construction of the work where designated. Common borrow shall be free from frozen material, perishable rubbish, peat, organic, and other unsuitable material.

Sieve Designation	Percentage by Weight Passing Square Mesh Sieves
6-inch	100
No. 200	0-5

Common borrow may be used for embankments unless otherwise indicated and provided that the material is at a moisture content suitable for compaction to the specified density. No rocks shall exceed 3/4 of the depth of the specified lift thickness.

D. Sand: Shall be well graded durable material free of organic matter and conform to the following gradation requirements:

Sieve Designation	Percent by Weight Passing Square Mesh Sieve
3/8 inch	100
No. 4	95-100
No. 16	50-85
No. 50	10-30
No.100	2-10
No.200	0-5

Sand conforming to the requirement for fine aggregate in ASTM Standard Specifications for Concrete Aggregate, Designation C-33, will meet the above requirement.

2.2 CONCRETE

A. If concrete is required for excess excavation, provide 3,000 psi concrete complying with requirements of Section 03300.

2.3 FILTER FABRIC

A. If filter fabric is required, refer to Section 02260.

PART 3 - EXECUTION

3.1 INSPECTION

A. Examine the areas and conditions under which excavating, backfilling, filling, compaction and grading are to be performed and notify the Engineer in writing of

conditions detrimental to the proper and timely completion of the work. Do not proceed with the work until unsatisfactory conditions have been corrected.

3.2 EXCAVATION

A. General:

1. Excavation consists of removal and disposal of all material encountered when establishing line and grade elevations required for execution of the work.
2. The Contractor shall make excavations in such manner and to such widths as will give suitable room for building the structures or laying and jointing the piping; shall furnish and place all sheeting, bracing, and supports; shall do all cofferdamming, pumping, and draining; and shall render the bottom of the excavations firm, dry and acceptable in all respects.
3. All excavation shall be classified as either earth or ledge.
   a) Earth Excavation shall consist of the removal, hauling and disposal of all earth materials encountered during excavation including but not limited to native soil or fill, pavement (bituminous or concrete), existing sewers and manholes, ashes, loam, clay, swamp muck, debris, soft or disintegrated rock or hard pan which can be removed with a backhoe, or a combination of such materials, and boulders measuring less than one cubic yard.
   b) Ledge Excavation: Shall consist of the removal, hauling, and disposal of all ledge or rock encountered during excavation. "Ledge" and "rock" shall be defined as any natural compound, natural mixture that in the opinion of the Engineer can be removed from its existing position and state only by drilling and blasting, wedging, sledging, boring or breaking up with power operated tools. No boulder, ledge, slab, or other single piece of excavated material less than one cubic yard in total volume shall be considered to be rock unless, in the opinion of the Engineer it must be removed from its existing position by one of the methods mentioned above.
4. The Contractor shall not have any right of property in any materials taken from any excavation. Do not remove any such materials from the construction site without the approval of the Engineer. This provision shall in no way relieve the Contractor of his obligations to remove and dispose of any material determined by the Engineer to be unsuitable for backfilling. The Contractor shall dispose of unsuitable and excess material in accordance with the applicable sections of the Contract Documents.

B. Additional Excavation: When excavation has reached required subgrade elevations, notify the Engineer and Resident Project Representative who will observe the conditions.

1. If material unsuitable for the structure or paved area or pipeline (in the opinion of the Engineer) is found at or below the grade to which excavation would normally be carried in accordance with the Drawings and/or Specifications, the Contractor shall remove such material to the required width and depth and

replace it with thoroughly compacted select fill, screened stone, crushed stone, or concrete as directed by the Engineer.

2. All excavated materials designated by the Engineer as unsuitable shall become the property of the Contractor and disposed of at locations in accordance with all State and local laws and the provisions of the Contract Documents.

C. Unauthorized Excavation: Shall consist of removal of materials beyond indicated subgrade elevations or dimensions without specific authorization of Engineer. Unauthorized excavation, as well as remedial work required by the Engineer shall be at the Contractor's expense. Remedial work required is as follows:

1. Under footings, foundation bases, or retaining walls, fill unauthorized excavation with select fill or screened stone compacted to 95%. Provide 12" minimum select fill or screened stone directly under footings. Concrete fill may be used to bring elevations to proper position, when acceptable to Engineer.
2. If the bottom of a trench is excavated beyond the limits indicated, backfill the resulting void with thoroughly compacted screened stone, unless otherwise indicated.
3. Elsewhere, backfill and compact unauthorized excavations as specified for authorized excavations of same classification, unless otherwise directed by Engineer.

D. Structural Excavation:

1. Shall consist of the removal, hauling, disposal, of all material encountered in the excavation to permit proper installation of structures.
2. Excavations for structures shall be carried to the lines and subgrades shown on the Drawings.
3. Excavate areas large enough to provide suitable room for building the structures.
4. The extent of open excavation shall be controlled by prevailing conditions subject to any limits designated by the Engineer.
5. Provide, install, and maintain sheeting and bracing as necessary to support the sides of the excavation and to prevent any movement of earth which could diminish the width of the excavation or otherwise injure the work, adjacent structures, or persons and property in accordance with all state and OSHA safety standards.
6. Erect suitable fences around structure excavation and other dangerous locations created by the work, at no additional cost to the Owner.
7. Exposed subgrade surfaces shall remain undisturbed, protected, and maintained as uniform, plane areas and shape to receive the foundation components of the structure.
    a. Conform to elevations and dimensions shown within a tolerance of plus or minus 0.10', and extending a sufficient distance from footings and foundations to permit placing and removal of concrete formwork, installation of services, other construction, and for inspection.

b. In excavating for footings and foundations, take care not to disturb bottom of excavation. Excavate by hand to final grade and trim bottoms to required lines and grades to leave solid base to receive the structure.

c. If a structure is to be constructed within the embankment, the fill shall first be brought to a minimum of 3 feet above the base of the footing. A suitable excavation shall then be made as though the fill were undisturbed earth.

E. Trench Excavation: Shall consist of removal, hauling and disposal of all material encountered in the excavation to the widths and depths shown on the Drawings to permit proper installation of underground utilities.

1. Excavate trenches to the uniform width shown on the Drawings sufficiently wide to provide sufficient space for installation, backfilling, and compaction. Every effort should be made to keep the sides of the trenches firm and undisturbed until backfilling has been completed and consolidated.
2. Trenches shall be excavated with approximately vertical sides between the elevation of the center of the pipe and an elevation one foot above the top of the pipe.
3. Grade bottoms of trenches as indicated for pipe and bedding to establish the indicated slopes and invert elevations, notching under pipe joints to provide solid bearing for the entire body of the pipe, where applicable.
4. If pipe is to be laid in embankments or other recently filled material, the material shall first be placed to the top of the fill or to a height of at least two feet above the top of the pipe, whichever is the lesser. Particular care shall be taken to ensure maximum consolidation of material under the pipe location. The pipe trench shall be excavated as though in undisturbed material.
5. Unless otherwise specifically directed or permitted by the Engineer, begin excavation at the low end of sewer and storm lines and proceed upgrade.
6. Perform excavation for force mains and water mains in a logical sequence.
7. The extent of open excavation shall be controlled by prevailing conditions subject to any limits prescribed by the Engineer.
8. As the excavation progresses, install such shoring and bracing necessary to prevent caving and sliding and to meet the requirements of the state and OSHA safety standards, as outlined in the appropriate section of this Specification.

F. Protection of Persons, Property and Utilities:

1. Barricade open excavations occurring as part of this work and post with warning lights in compliance with local and State regulations.
2. Protect structures, utilities, sidewalks, pavements, and other facilities from damage caused by settlement, lateral movement, undermining, washout and other hazards created by earthwork operations. Exercise extreme caution and utilize sheeting, bracing, and whatever other precautionary measures that may be required.
3. Rules and regulations governing the respective utilities shall be observed in execution of all work. Active utilities and structures shall be adequately protected from damage, and removed or relocated only as indicated or

specified. Inactive and abandoned utilities encountered in excavation and grading operations shall be removed, plugged or capped only with written authorization of the utility owner. Report in writing to the Engineer, the locations of such abandoned utilities. Extreme care shall be taken when performing work in the vicinity of existing utility lines, utilizing hand excavation in such areas, as far as practicable.

4. Repair, or have repaired, all damage to existing utilities, structures, lawns, other public and private property which results from construction operations, at no additional expense to the Owner, to the complete satisfaction of the Engineer, the utility, the property owner, and the Owner.

G. Use of Explosives:
   1. Do not bring explosives onto site or use in work without prior written permission from authorities having jurisdiction. Contractor is solely responsible for handling, storage, and use of explosive materials when their use is permitted.
   2. All blasting shall be performed in accordance with all pertinent provisions of the "Manual of Accident Prevention in Construction" of the Associated General Contractors of America, Inc.

H. Stability of Excavations:
   1. Slope sides of excavations to comply with all codes and ordinances having jurisdiction. Shore and brace where sloping is not possible because of space restrictions or stability of material excavated.
   2. Maintain sides and slopes of excavations in a safe condition until completion of backfilling.

I. Shoring and Bracing:
   1. Provide materials for shoring and bracing, such as sheet piling, uprights, stringers and cross-braces, in good serviceable condition.
   2. Provide trench shoring and bracing to comply with local codes and authorities having jurisdiction. Refer to Specification Section 02156.
   3. Maintain shoring and bracing in excavations regardless of time period excavations will be open. Install shoring and bracing as excavation progresses.

J. Material Storage:
   1. Stockpile excavated materials which are satisfactory for use on the work until required for backfill or fill. Place, grade and shape stockpiles for proper drainage and protect with temporary seeding or other acceptable methods to control erosion.
   2. Locate and retain soil materials away from edge of excavations.
   3. Dispose of excess soil material and waste materials as herein specified.

K. Dewatering:
   1. To ensure proper conditions at all times during construction, the Contractor shall provide and maintain ample means and devices (including spare units kept ready for immediate use in case of breakdowns) with which to intercept and/or remove promptly and dispose properly of all water entering trenches and other excavations (including surface and subsurface waters).

2. Excavations shall be kept dry until the structures, pipes, and appurtenances to be built therein have been completed to such extent that they will not be floated or otherwise damaged. Refer to Specification Section 02401.

L. Cold Weather Protection:
1. Protect excavation bottoms against freezing when atmospheric temperature is less than 35°F.
2. No frozen material shall be used as backfill or fill and no backfill shall be placed on frozen material.

M. Separation of Surface Material:
1. The Contractor shall remove only as much of any existing pavement as is necessary for the prosecution of the work.
2. Prior to excavation, existing pavement shall be cut where in the opinion of the Engineer it is necessary to prevent damage to the remaining road surface.
3. Where pavement is removed in large pieces, it shall be disposed of before proceeding with the excavation.
4. From areas within which excavations are to be made, loam and topsoil shall be carefully removed and separately stored to be used again as directed; or, if the Contractor prefers not to separate surface materials, he shall furnish, as directed, loam and topsoil at least equal in quantity and quality to that excavated.

N. Dust Control:
1. During the progress of the work, the Contractor shall conduct his operations and maintain the area of his activities, including sweeping and sprinkling of streets as necessary, so as to minimize the creation and dispersion of dust. Refer to Specification Section 01562.
2. If the Engineer decides that it is necessary to use calcium chloride for more effective dust control, the contractor shall furnish and spread the material, as directed.

3.3 BACKFILL AND FILL

A. General:
1. Backfilling shall consist of replacing material removed to permit installation of structures or utilities, as indicated in the Contract Documents.
2. Filling shall consist of placing material in areas to bring them up to grades indicated on the Drawings.
3. The Contractor shall provide and place all necessary backfill and fill material, in layers to the required grade elevations.
4. Backfill excavations as promptly as work permits, but not until completion of the following:
   a. Acceptance by Engineer of construction below finish grade including, where applicable, dampproofing, waterproofing, and perimeter insulation.
   b. Inspection, approval, and recording locations of underground utilities.
   c. Removal of concrete formwork.

d. Removal of shoring and bracing, and backfilling of voids with satisfactory materials. Temporary sheet piling driven below bottom of structures shall be removed in manner to prevent settlement of the structure or utilities, or cut off and left in place if required.
e. Removal of trash and debris.
f. Permanent or temporary horizontal bracing is in place on horizontally supported walls.
g. Density testing having results meeting requirements specified herein.

5. In general, and unless otherwise indicated, material used for backfill of trenches and excavations around structures shall be suitable excavated material which was removed in the course of making the construction excavation. Unless otherwise specified or allowed by the Engineer the backfill and fill shall be placed in layers not to exceed 8 inches in thickness.
6. All fill and backfill under structures and pavement, and adjacent to structures, shall be compacted crushed stone or select fill as specified or as indicated on the Drawings. The fill and backfill materials shall be placed in layers not exceeding 8 inches in thickness.
7. All structures (including manholes) shall be placed on a 6-inch mat of screened stone unless otherwise indicated.
8. Suitable excavated material shall meet the following requirements:
   a. Free from large clods, silt lumps or balls of clay.
   b. Free from stones and rock fragments with larger than 12 inch max. dimension.
   c. Free from organics, peat, etc.
   d. Free from frozen material.
9. If sufficient suitable excavated material is not available from the excavations, and where indicated on the Drawings, the backfill material shall be select fill or common borrow, unless otherwise indicated, as required and as directed by the Engineer.
10. Do not backfill with, or on, frozen materials.
11. Remove, or otherwise treat as necessary, previously placed material that has frozen prior to placing backfill.
12. Do not mechanically or hand compact material that is, in the opinion of the Engineer, too wet.
13. Do not continue backfilling until the previously placed and new materials have dried sufficiently to permit proper compaction.
14. The nature of the backfill materials will govern the methods best suited for their placement and compaction. Compaction methods and required percent compaction is covered in Compaction section.
15. Before compaction, moisten or aerate each layer as necessary to provide a water content necessary to meet the required percentage of maximum dry density for each area classification specified.
16. Do not allow large masses of backfill material to be dropped into the excavation in such a manner that may damage pipes and structures.

17. Place material in a manner that will prevent stones and lumps from becoming nested.
18. Completely fill all voids between stones with fine material.
19. Do not place backfill on or against new concrete until it has attained sufficient strength to support loads without distortion, cracking, and other damage.
20. Deposit backfill and fill material evenly on all sides of structures to avoid unequal soil pressures.
21. Keep stones or rock fragments with a dimension greater than two inches at least one foot away from the pipe or structure during backfilling.
22. Leave sheeting in place when damage is likely to result from its withdrawal.
23. Completely fill voids left by the removal of sheeting with screened stone which is compacted thoroughly.

B. Pipe Bedding, Initial Backfill and Trench Backfill

1. Place bedding and backfill in layers of uniform thickness specified herein, and as shown on the Drawings.
2. Thoroughly compact each layer by means of a suitable vibrator or mechanical tamper.
3. Install pipe bedding and initial backfill in layers of uniform thickness not greater than eight (8) inches.
4. Deposit the remainder of the backfill in uniform layers not greater than eight inches.
5. Provide underground sewer marking tape for the full length of sewer trenches as shown on the Drawings. Marking tape shall be SETON #210 SEW or equivalent.
6. Where soft silt and clay soils are encountered the trench shall be excavated six inches below the normal bedding and backfilled with 6-inches of compacted sand.
7. Backfill trenches with concrete where trench excavations pass within 18 inches of column or wall footings and which are carried below the bottom of such footings, or which pass under wall footings. Place concrete to the level of the bottom of adjacent footings.
8. The following schedule gives the bedding requirements for various types of pipe. Distances refer to vertical thickness below the pipe.

BEDDING REQUIREMENTS

DI or Concrete Pipe	6 inches min. Sand.
PVC or PE Pipe	6 inches min. Sand.

9. The following schedule gives the initial backfill requirements for various types of pipes.

INITIAL BACKFILL REQUIREMENTS

DI or Concrete, Pipe	Sand 12 inches min. over top of pipe.
PVC or PE Pipe	12 inches min. sand over the top of the pipe.

10. Special bedding and backfill requirements shown on the Drawings supersede requirements of this section.
11. Where pipes or structures pass through or under the impervious core of the lagoon embankments, bedding and backfill material shall consist of the impervious embankment material. Extra care should be given to properly and thoroughly compact the bedding material around the pipe.

C. Improper Backfill:
1. When excavation and trenches have been improperly backfilled, and when settlement occurs, reopen the excavation to the depth required, as directed by the Engineer.
2. Refill and compact the excavation or trench with suitable material and restore the surface to the required grade and condition.
3. Excavation, backfilling, and compacting work performed to correct improper backfilling shall be performed at no additional cost to the Owner.

D. Ground Surface Preparation:
1. Remove vegetation, debris, unsatisfactory soil materials, obstructions, and deleterious materials from ground surface prior to placement of fills. Plow, strip, scarify or break-up sloped surface steeper than 1 vertical to 4 horizontal.
2. When existing ground surface has a density less than that specified under "compaction" for the particular area classification, break up the ground surface, pulverize, moisture-condition to the optimum moisture content, and compact to required depth and percentage of maximum density.

3.4 COMPACTION

A. General:
1. Control soil compaction during construction to provide not less than the minimum percentage of density specified for each area classification.

B. Percentage of Maximum Density Requirements:
1. Compact soil to not less than the following percentages of maximum dry density determined in accordance with ASTM D1557 as indicated.
   a. Structures: Compact each layer of backfill or fill material below or adjacent to structures to at least 95% of maximum dry density (ASTM D1557).
   b. Off Traveled Way Areas: Compact each layer of backfill or fill material to at least 90% of maximum dry density (ASTM D1557).

c. Walkways: Compact each layer of backfill or fill material to at least 93% of maximum dry density (ASTM D1557).
d. Roadways, Drives and Paved Areas: Compact each layer of fill, subbase material, and base material to at least 95% of maximum dry density (ASTM D1557).
e. Pipes: Compact bedding material and each layer of backfill to at least 90% maximum dry density (ASTM D1557). Where backfilling with excavated material, compact to native field density.
f. Embankments: Compact each layer of embankment material to at least 95% of maximum dry density (ASTM D1557).

C. Moisture Control:
1. Where subgrade or a layer of soil material must be moisture conditioned before compaction, uniformly apply water to surface of subgrade, or layer of soil material, in quantities controlled to prevent free water appearing on surface during or subsequent to compaction operations.
2. Remove and replace, or scarify and air dry, soil material that is too wet to permit compaction to specified density.
3. Soil material that has been removed because it is too wet to permit compaction may be stockpiled or spread and allowed to dry. Assist drying by discing, harrowing or pulverizing until moisture content is reduced to a satisfactory level.

D. Embankment Compaction:
1. After each embankment layer has been spread to the required maximum 8-inch thickness and its moisture content has been adjusted as necessary, it shall be rolled with a sufficient number of passes to obtain the required compaction. One pass is defined as the required number of successive trips which by means of sufficient overlap will insure complete coverage and uniform compaction of an entire lift. Additional passes shall not be made until the previous pass has been completed.
2. When any section of an embankment sinks or weaves excessively under the roller or under hauling units and other equipment, it will be evident that the required degree of compaction is not being obtained and that a reduction in the moisture content is required. If at any place or time such sinking and weaving produces surface cracks which, in the judgment of the Engineer are of such character, amount, or extent to indicate an unfavorable condition, he will recommend operations on that part of the embankment to be suspended until such time as it shall have become sufficiently stabilized. The ideal condition of the embankment is that attained when the entire embankment below the surface being rolled is so firm and hard as to show only the slightest weaving and deflection as the roller passes.
3. If the moisture content is insufficient to obtain the required compaction, the rolling shall not proceed except with the written approval of the Engineer, and in that event, additional rolling shall be done to obtain the required compaction. If the moisture content is greater than the limit specified, the material of such water content may be removed and stockpiled for later use or

the rolling shall be delayed until such time as the material has dried sufficiently so that the moisture content is within the specified limits. No adjustment in price will be made on account of any operation of the Contractor in removing and stockpiling, or in drying the materials or on account of delays occasioned thereby.

4. If because of insufficient overlap, too much or too little water, or other cause attributable to defective work, the compaction obtained over any area is less than that required, the condition shall be remedied, and if additional rollings are ordered, they will be done at no cost to the Owner. If the material itself is unsatisfactory or if additional rolling or other means fails to produce satisfactory results, the area in question shall be removed down to material of satisfactory density and the removal, replacement, and re-rolling shall be done by the Contractor, without additional compensation.
5. Material compaction by hand-operated equipment or power-driven tampers shall be spread in layers not more than 6 inches thick. The degree of compaction obtained by these tamping operations shall be equal in every respect to that secured by the rolling operation.

E. Compaction Methods: The Contractor may select any method of compaction that is suitable to compact the material to the required density.

1. General: Whatever method of compacting backfill is used, care shall be taken that stones and lumps shall not become nested and that all voids between stones shall be completely filled with fine material. All voids left by the removal of sheeting shall be completely backfilled with suitable materials and thoroughly compacted.
2. Tamping or Rolling: If the material is to be compacted by tamping or rolling, the material shall be deposited and spread in uniform, parallel layers not exceeding the uncompacted thicknesses specified. Before the next layer is placed, each layer shall be tamped as required so as to obtain a thoroughly compacted mass. Care shall be taken that the material close to the excavation side slopes, as well as in all other portions of the fill area, is thoroughly compacted. When the excavation width and the depth to which backfill has been placed are sufficient to make it feasible, and it can be done effectively and without damage to the pipe or structure, backfill may, on approval, be compacted by the use of suitable rollers, tractors, or similar powered equipment instead of by tamping. For compaction by tamping or rolling, the rate at which backfilling material is deposited shall not exceed that permitted by the facilities for its spreading, leveling, and compacting as furnished by the Contractor.

F. Reconditioning Compacted Areas: Where completed compacted areas are disturbed by subsequent construction operations or adverse weather, scarify surface, re-shape, and compact to required density prior to further construction.

3.5 GRADING

A. General:
   1. Grading shall consist of that work necessary to bring all areas to the final grades.
   2. Uniformly grade areas within limits of work requiring grading, including adjacent transition areas.
   3. Smooth finished surface within specified tolerances, compact with uniform levels or slopes between points where elevations are shown, or between such points and existing grades.

B. Grading Outside Building Lines:
   1. Grade areas adjacent to building to drain away from structures and to prevent ponding.
   2. Grade surfaces to be free from irregular surface changes, and as follows:
      a. Lawn or Unpaved Areas: Finish grade areas to receive topsoil to within not more than 1" above or below the required subgrade elevations.
      b. Walks: Shape surface of areas under walks to line, grade and cross-section, with finish surface not more than 1/2" above or below the required subgrade elevation.
      c. Pavements: Shape surface of areas under pavement to line, grade and cross-section, with finish surface not more than 3/8" above or below the required subgrade elevation.

C. Grading Surface of Fill Under Building Slabs:
   1. Grade surface to be smooth and even, free of voids, and compacted as specified, to the required elevation.
   2. Provide final grades within a tolerance of 1/2" when tested with a 10' straight edge.

D. Compaction:
   1. After grading, compact subgrade surfaces to the depth and percentage of maximum density for each area classification.

E. Protection of Graded Areas:
   1. Protect newly graded areas from traffic and erosion. Keep free of trash and debris.
   2. Repair and re-establish grades in settled, eroded, and rutted areas to specified tolerances.

3.6 BASE COURSE AND LEVELING COURSE

A. General:
   1. Base course consists of placing the specified materials in layers to support a leveling course or paved surface, as indicated in the Drawings.

B. Grade Control:
   1. During construction, maintain lines and grades including crown and cross-slope of base course and leveling course.

C. Placing:
   1. Place base course on prepared subbase conforming to indicated cross-section and thickness. Maintain optimum moisture content for compacting base materials.
   2. Place leveling course on prepared base course, conforming to indicated cross-section and thickness. Maintain optimum moisture content for compaction.

D. Shaping and Compacting:
   1. All layers of aggregate base course and leveling course shall be compacted to the required density immediately after placing. As soon as the compaction of any layer has been completed, the next layer shall be placed.
   2. The Contractor shall bear full responsibility for and make all necessary repairs to the base leveling courses and the subgrade until the full depth of the base leveling courses is placed and compacted. Repairs shall be made at no additional cost to the Owner.
   3. If the top of any layer of the aggregate base or leveling course becomes contaminated by degradation of the aggregate or addition of foreign materials, the contaminated material shall be removed and replaced with the specified material at the Contractor's expense.

END OF SECTION

SECTION 02270

TEMPORARY EROSION CONTROL

PART 1 - GENERAL

1.1 DESCRIPTION

A. Work Included:

1. The work under this section shall include provision of all labor, equipment, materials and maintenance of temporary erosion control devices, as specified herein, as shown on the Drawings and as directed by the Engineer.
2. Erosion control measures shall be provided as necessary to correct conditions that develop prior to the completion of permanent erosion control devices, or as required to control erosion that occurs during normal construction operations.
3. Construction operations shall comply with all federal, state and local regulations pertaining to erosion control.
4. After awarding of or after being awarded the Contract, prior to commencement of construction activities, the Contractor will meet with the Engineer to discuss erosion control requirements and develop a mutual understanding relative to details of erosion control.

B. Related Work Specified Elsewhere:

1. Site work is specified in appropriate sections of this Division.

C. Design Criteria:

1. Conduct all construction in a manner and sequence that causes the least practical disturbance of the physical environment.
2. Stabilize disturbed earth surfaces in the shortest time and employ such temporary erosion control devices, as may be necessary, until such time as adequate soil stabilization has been achieved.

1.2 SUBMITTALS

A. The Contractor shall furnish the Engineer, in writing, his work plan giving proposed locations for storage of topsoil and excavated material, before beginning construction. A schedule of work shall accompany the work plan. Acceptance of this plan will not relieve the Contractor of his responsibility for completion of the work as specified.

PART 2 - PRODUCTS

2.1 MATERIALS

A. Baled Hay:

1. At least 14" by 18" by 30" securely tied to form a firm bale, staked as necessary to hold the bale in place.

B. Sand Bags:
   1. Heavy cloth bags of approximately one cubic foot capacity filled with sand or gravel.

C. Mulches:
   1. Loose hay, straw, peat moss, wood chips, bark mulch, crushed stone, wood excelsior, or wood fiber cellulose.
   2. Type and use shall be as specified by the "Maine Erosion and Sedimentation Control Handbook for Construction - Best Management Practices" prepared by the Maine DEP and the Soil and Water Conservation Commission herein after referred to as the BMP.

D. Mats and Nettings:
   1. Twisted Craft paper, yarn, jute, excelsior wood fiber mats, glass fiber and plastic film.
   2. Type and use shall be as specified in the BMP.

E. Permanent Seed:
   1. Conservation mix appropriate to the predominant soil conditions as specified in the BMP and subject to approval by the Engineer.

F. Temporary Seeding:
   1. Use species appropriate for soil conditions and season as specified in the BMP and subject to approval by the Engineer.

G. Water:
   1. The Contractor shall provide water and equipment to control dust, as directed by the Engineer.

H. Filter Fabrics:
   1. Filter fabric shall be of one of the commercially available brands such as Mirafi, Typar or equivalent. Fabric types for particular applications shall be approved by the Engineer prior to installation.

2.2 CONSTRUCTION REQUIREMENTS

A. Temporary Erosion Checks:
   1. Temporary erosion checks shall be constructed in ditches and other locations as necessary.
   2. Baled hay, sand bags or siltation fence may be used in an arrangement to fit local conditions.

B. Temporary Berms:
   1. Temporary barriers shall be constructed along the toe of embankments when necessary to prevent erosion and sedimentation.

C. Temporary Seeding:
   Areas to remain exposed for a time exceeding 3 weeks shall receive temporary seeding as indicated below:

Season	Seed	Rate
Summer (5/15 - 8/15)	Sudangrass	40 lbs/acre
Late Summer/Early Fall	Oats	80 lbs/acre

(8/15 - 9/15)	Annual Ryegrass	40 lbs/acre
Fall (9/15 - 10/1)	Winter Rye	112 lbs/acre
Winter (10/1 - 4/1)	Mulch w/Dormant Seed	80 lbs/acre*
Spring (4/1 - 7/1)	Oats	80 lbs/acre
	Annual Ryegrass	40 lbs/acre

* seed rate only

D. Siltation fences shall consist of porous filter fabric with a wire mesh backing and shall be supported by posts as per manufacturer's recommendations. Fabric shall be approved by the Engineer.

E. Mulch All Areas Receiving Seeding:
Use either wood cellulose fiber mulch (750 lbs/acre); or straw mulch with chemical tack (as per manufacturer's specifications). Wetting for small areas may be permitted. Biodegradable netting is recommended in areas to be exposed to drainage flow.

F. Erosion control matting for slopes and ditches shall be anchored with pegs and/or staples per manufacturer's recommendations. Contractor shall provide matting along the flowline of all ditches and swales having a longitudinal slope in excess of 0.01 ft/ft, and on all slopes in excess of 3(H) to 1(V).

PART 3 - EXECUTION

3.1 INSTALLATION

A. Temporary Erosion Checks:
   1. Temporary erosion checks shall be constructed in ditches and at other locations designated by the Engineer. The Engineer may modify the Contractor's arrangement of silt fences, bales and bags to fit local conditions.
   2. Baled hay, silt fences, or sandbags, or some combination, may be used in other areas, as necessary, to inhibit soil erosion.
   3. Siltation fence, if called for in the plans, shall be located and installed as shown.
   4. Sedimentation ponds shall be sited and constructed to the grades and dimensions as shown on the Drawings and will include drainage pipe and an emergency spillway.

B. Erosion control matting for slopes and ditches shall be installed where indicated on the Drawings and as required to stabilize the soil until permanent vegetative stabilization is established.

C. Maintenance:
Erosion control features shall be installed prior to excavation wherever appropriate. Temporary erosion control features shall remain in place and shall be maintained until a satisfactory growth of grass is established. The Contractor shall be responsible for maintaining erosion control features throughout the life of the construction contract. Maintenance will include periodic inspections by the Owner or Engineer for effectiveness of location, installation and condition with corrective action taken by the Contractor, as appropriate.

D. Removing and Disposing of Materials:

1. When no longer needed, material and devices for temporary erosion control shall be removed and disposed of upon approval by Engineer.
2. When removed, such devices may be reused in other locations, provided they are in good condition and suitable to perform the erosion control for which they are intended.
3. When dispersed over adjacent areas, the material shall be scattered to the extent that it causes no unsightly conditions nor creates future maintenance problems.
4. Sedimentation basins, if no longer required, will be filled in, the pipe removed, the surface loamed and grass cover shall be established.

END OF SECTION

SECTION 02401

DEWATERING

PART 1 - GENERAL

1.1 DESCRIPTION

A. Work Included:
   1. Furnish, operate and maintain, as incidental to the project, dewatering equipment for the control, collection and disposal of ground and surface water where necessary to complete the work.

B. Related Work Specified Elsewhere: (When Applicable)
   1. Earthwork and Sheeting are specified in the appropriate section in this division.

1.2 SUBMITTALS

A. Provide submittals in accordance with Specification Section 01340.

B. Submit design calculations, description and complete layout drawings of the proposed dewatering system, stamped and sealed by a Professional Engineer registered in the State of Maine. Such review shall not relieve the Contractor of sole responsibility for the dewatering system as necessary to prevent damage to adjacent structures, utilities, streets adjacent to excavations and for the safety of persons working within the excavated areas.

PART 2 - PRODUCTS

Not Applicable

PART 3 - EXECUTION

3.1 PERFORMANCE

A. General:
   1. Keep work areas dewatered until the structures, pipes, and appurtenances to be built there have been completed to such an extent that they will not be damaged by water.
   2. Thoroughly brace or otherwise protect against flotation all pipelines and structures which are not stable.
   3. Maintain standby backup equipment and power supply throughout the duration of the dewatering operation.
   4. Prevent soil particles from entering the discharge points.
   5. Ground water level shall be maintained at least one foot below the bottom of the excavation.

B. Disposal of Water:
   1. Dispose of water pumped or drained from the construction site in a suitable manner to avoid siltation of adjacent drainage structures and piping, wetlands

or water bodies, injury to public health, damage to public and private property, and damage to the work completed or in progress.

2. Provide suitable temporary channels for water that may flow along or across the construction site.
3. Provide treatment as necessary to prevent discharge of contaminated ground water caused by Contractor's operations, or any contaminated ground water that may pass through the excavation support system selected by the Contractor.
4. Contractor must obtain all necessary regulatory approvals for the disposal of dewatering flows. These may include, among others, approval by the USEPA under the National Pollutant Discharge Elimination System (NPDES) program for construction activities or Maine discharge permit.

C. Damage:
1. Avoid damage to adjacent buildings, roads, structures, utilities and other facilities.
2. Any damage resulting from the dewatering operations, or the failure of the Contractor to maintain the work in a suitably dry condition shall be repaired by the Contractor at no additional cost to the Owner.

D. Temporary Underdrains:
1. When necessary, temporary underdrains may be placed in excavations.
2. Underdrain pipe shall be perforated corrugated metal, polyethylene or P.V.C. pipe.
3. Entirely surround the underdrain and fill the space between the underdrain and the pipe or structure with free draining material.

E. Excavation Sump Pumping:
1. When necessary and where appropriate to the geotechnical conditions encountered, excavations may be over excavated 6 to 12 inches and filled with screened stone to allow sump pumping of groundwater.
2. The system shall be installed with suitable screens and filters so that pumping of fines does not occur.

F. Well and Wellpoint System:
1. If necessary, dewater the excavations and trenches with an efficient well or wellpoint system to drain the soil and prevent saturated soil from flowing into the excavated wells and area.
2. Wellpoint and well system shall be of the type designed for dewatering work and shall be installed with suitable screens and filters so that pumping of fines does not occur.
3. Pumping units shall be capable of maintaining sufficient suction to handle large volumes of air and water at the same time.

END OF SECTION

SECTION 02485

LOAMING & SEEDING

PART 1 - GENERAL

1.1 DESCRIPTION

A. Work Included: Furnish, place, and test topsoil, seed, lime, and fertilizer where shown on the drawings and protect and maintain seeded areas disturbed by construction work, as directed by the Engineer.

B. Related Work Specified Elsewhere (When Applicable): Earthwork, excavation, backfill, compaction, site grading and temporary erosion control are specified in the appropriate Sections of this Division.

1.2 SUBMITTALS AND TESTING

A. Seed:

1. Furnish the Engineer with duplicate signed copies of a statement from the vendor, certifying that each container of seed delivered to the project site is fully labeled in accordance with the Federal Seed Act and is at least equal to the specification requirements.
2. This certification shall appear in, or with, all copies of invoices for the seed.
3. The certification shall include the guaranteed percentages of purity, weed content and germination of the seed, and also the net weight and date of shipment. No seed may be sown until the Contractor has submitted the certificates and certificates have been approved.
4. Each lot of seed shall be subject to sampling and testing, at the discretion of the Engineer, in accordance with the latest rules and regulations under the Federal Seed Act.

B. Topsoil:

1. Inform the Engineer, within 30 days after the award of the Contract, of the sources from which the topsoil is to be furnished.
2. Obtain representative soil samples, taken from several locations in the area under consideration for topsoil removal, to the full stripping depth.
3. Have soil samples tested by an independent soils testing laboratory, approved by the Engineer, at the Contractor's expense.
4. Have soil samples tested for physical properties and pH (or lime requirement), for organic matter, available phosphoric acid, and available potash, in accordance with standard practices of soil testing.
5. Approval, by the Engineer, to use topsoil for the work will be dependent upon the results of the soils tests.

C. Lime & Fertilizer:

1. Furnish the Engineer with duplicate copies of invoices for all lime and fertilizer used on the project showing the total minimum carbonates and minimum percentages of the material furnished that pass the 90 and 20 mesh sieves and the grade furnished.

2. Each lot of lime and fertilizer shall be subject to sampling and testing at the discretion of the Engineer.
3. Sampling and testing shall be in accordance with the official methods of the Association of Official Agricultural Chemists.
4. Upon completion of the project, a final check may be made comparing the total quantities of fertilizer and lime used to the total area seeded. If the minimum rates of application have not been met, the Engineer may require the Contractor to distribute additional quantities of these materials to meet the minimum rates.

1.3 DELIVERY, STORAGE & HANDLING

A. Seed:
   1. Furnish all seed in sealed standard containers, unless exception is granted in writing by the Engineer.
   2. Containers shall be labeled in accordance with the United States Department of Agriculture's rules and regulations under the Federal Seed Act in effect at the time of purchase.
B. Fertilizer:
   1. Furnish all fertilizer in unopened original containers.
   2. Containers shall be labeled with the manufacturer's statement of analysis.

1.4 JOB CONDITIONS

A. Topsoil: Do not place or spread topsoil when the subgrade is frozen, excessively wet or dry, or in any condition otherwise detrimental, in the opinion of the Engineer, to the proposed planting or to proper grading.
B. Seeding:
   1. Planting Seasons: The recommended seeding time is from April 1 to September 15. The Contractor may seed at other times. Regardless of the time of seeding, the Contractor shall be responsible for each seeded area until it is accepted.
   2. Weather Conditions:
      a. Do not perform seeding work when weather conditions are such that beneficial results are not likely to be obtained, such as drought, excessive moisture, or high winds.
      b. Stop the seeding work when, in the opinion of the Engineer, weather conditions are not favorable.
      c. Resume the work only when, in the opinion of the Engineer, conditions become favorable, or when approved alternate or corrective measures and procedures are placed into effect.

PART 2 - PRODUCTS

2.1 MATERIALS

A. Seed:

1. Provide the grass seed mixture approved by the Engineer, having the following composition:
   a. Park Mixture:
      50 percent Creeping Red Fesque
      30 percent Kentucky Bluegrass
      20 percent Annual Ryegrass
   b. Roadside Mixture:
      50 percent Creeping Red Fescue
      15 percent Kentucky Bluegrass
      5 percent White Clover
      2 percent Red Top
      3 percent Birdsfoot Trefoil
      25 percent Annual Ryegrass
2. Do not use seed which has become wet, moldy, or otherwise damaged in transit or during storage.

B. Topsoil:

1. Provide the quantity of topsoil necessary, in the opinion of the Engineer, to complete the work.
2. Provide topsoil that is natural, friable clay-loam soil possessing the characteristics of representative soils in the vicinity which produce heavy growths of crops, grass, or other vegetation.
3. Provide topsoil which is reasonably free from subsoil, brush, objectionable weeds, other litter, clay lumps, stones, stumps, roots, objects larger than 2 inches in diameter, and toxic substances which might be harmful to plant growth or be a hindrance to grading, planting, and maintenance operations.
4. Obtain topsoil from naturally well drained areas.

C. Lime:

1. Provide lime which is ground limestone containing not less than 85% of total carbonate and of such fineness that 90% will pass a No. 20 sieve and 50% will pass a No. 100 sieve.
2. Coarser materials will be acceptable provided the specified rates of application are increased proportionately on the basis of quantities passing a No. 100 sieve. No additional payment will be made to the Contractor for the increased quantity.

D. Fertilizer:

1. Provide a commercial fertilizer approved by the Engineer.
2. Provide fertilizer containing the following minimum percentage of nutrients by weight:
   10% Available phosphoric acid
   10% Available potash
   10% Available nitrogen (75% of the nitrogen shall be organic)

PART 3 - EXECUTION

3.1 PREPARATION

A. Equipment:
   1. Provide all equipment necessary for the proper preparation of the ground surface and for the handling and placing of all required materials.
   2. Demonstrate to the Engineer that the equipment will apply materials at the specified rates.

B. Soil: Perform the following work prior to the application of lime, fertilizer or seed.
   1. Scarify the subgrade to a depth of 2 inches to allow the bonding of the topsoil with the subsoil.
   2. Apply topsoil to a depth of 4 inches or as directed on areas to be seeded.
   3. Trim and rake the topsoil to true grades free from unsightly variations, humps, ridges or depressions.
   4. Remove all objectionable material and form a finely pulverized seed bed.

3.2 PERFORMANCE

A. Grading:
   1. Grade the areas to be seeded as shown on the Drawings or as directed by the Engineer.
   2. Leave all surfaces in even and properly compacted condition.
   3. Maintain grades on the areas to be seeded in true and even conditions, including any necessary repairs to previously graded areas.

B. Placing Topsoil:
   1. Uniformly distribute and evenly spread topsoil on the designated areas.
   2. Spread the topsoil in such a manner that planting work can be performed with little additional soil preparation or tillage.
   3. Correct any irregularities in the surface resulting from topsoiling or other operations to prevent the formation of depressions where water may stand.
   4. Thoroughly till the topsoil to a depth of at least 3 inches by plowing, discing, harrowing, or other approved method until the condition of the soil is acceptable to the Engineer.

C. Placing Fertilizer:
   1. Distribute fertilizer uniformly at a rate determined by the soils test over the areas to be seeded.
   2. Incorporate fertilizer into the soil to a depth of at least 3 inches by discing, harrowing, or other methods acceptable to the Engineer.
   3. The incorporation of fertilizer may be a part of the tillage operation specified above.
   4. Distribution by means of an approved seed drill equipped to sow seed and distribute fertilizer at the same time will be acceptable.

D. Placing Lime:
   1. Uniformly distribute lime immediately following or simultaneously with the incorporation of fertilizer.

2. Distribute lime at a rate determined from the pH test, to a depth of at least 3 inches by discing, harrowing, or other methods acceptable to the Engineer.

E. Seeding:
1. Level out any undulations or irregularities in the surface resulting from tillage, fertilizing, liming or other operations before starting seeding operations.
2. Hydroseeding:
   a. Hydroseeding may be performed where approved and with equipment approved by the Engineer.
   b. Sow the seed over designated areas at a minimum rate of 5 pounds per 1000 square feet.
   c. Seed and fertilizing materials shall be kept thoroughly agitated in order to maintain a uniform suspension within the tank of the hydroseeder.
   d. The spraying equipment must be designed and operated to distribute seed and fertilizing materials evenly and uniformly on the designated areas at the required rates.
3. Drill Seeding:
   a. Drill seeding may be performed with approved equipment having drills not more than 2 inches apart.
   b. Sow the seed uniformly over the designated areas to a depth of 1/2 inch and at a rate of 5 pounds per 1,000 square feet.
4. Broadcast Seeding:
   a. Broadcast seeding may be performed by equipment approved by the Engineer.
   b. Sow the seed uniformly over the designated areas at a rate of 5 pounds per 1,000 square feet.
   c. Sow half the seed with the equipment moving in one direction and the remainder of the seed with the equipment moving at right angles to the first sowing.
   d. Cover the seed to an average depth of 1/2 inch by means of a brush harrow, spike-tooth harrow, chain harrow, cultipacker, or other approved devices.
   e. Do not perform broadcast seeding work during windy weather.

F. Compacting:
1. Seeded areas must be raked lightly after sowing unless seeding is to be directly followed by application of an approved mulch.
2. Compact the entire area immediately after the seeding operations have been completed.
3. Compact by means of a cultipacker, roller, or other equipment approved by the Engineer weighing 60 to 90 pounds per linear foot of roller.
4. If the soil is of such type that a smooth or corrugated roller cannot be operated satisfactorily, use a pneumatic roller (not wobbly wheel) that has tires of sufficient size to obtain complete coverage of the soil.
5. When using a cultipacker or similar equipment, perform the final rolling at right angles to the prevailing slopes to prevent water erosion, or at right angles to the prevailing wind to prevent dust.

3.3 PROTECTION & MAINTENANCE

A. Protection:
   1. Protect the seeded area against traffic or other use.
   2. Erect barricades and place warning signs as needed.

B. Maintenance:
   1. At the time of the first cutting, set mower blades two inches high. All lawns shall receive at least two mowings before acceptance. Coordinate schedule for mowing with Engineer.
   2. Maintenance shall also include all temporary protection fences, barriers and signs and all other work incidental to proper maintenance.
   3. Maintain grass areas until a full stand of grass is indicated, which will be a minimum of 45 days after all seeding work is completed, and shall not necessarily related to Substantial Completion of the General Contract.
   4. Protection and maintenance of grass areas shall consist of watering, weeding, cutting, repair of any erosion and reseeding as necessary to establish a uniform stand for the specified grasses, and shall continue until Acceptance by the Engineer of the work of this section. It shall also include the furnishing and applying of such pesticides as are necessary to keep grass areas free of insects and disease. All pesticides shall be approved by Engineer prior to use.

3.4 ACCEPTANCE

A. At final acceptance of the project all areas shall have a close stand of grass with no weeds present and no bare spots greater than three inches (3") in diameter over greater than five percent (5%) of the overall seeded area.

END OF SECTION

SECTION 02610

PIPE & PIPE FITTINGS FOR BURIED APPLICATIONS - GENERAL

PART 1 - GENERAL

1.1 DESCRIPTION

A. Install, support, and facilitate testing pipe and pipe fittings of the type and size and in the location shown on the Drawings and as specified herein.

B. Pipe, fittings and Testing will be furnished by the Kittery Water District.

1.2 SUBMITTALS TO THE ENGINEER

A. Submit shop drawings in accordance with SECTION 01340 and the General Conditions of the Construction Contract.

B. Submit manufacturer's "Certification of Conformance" that pipe and fittings and other piping appurtenances meet or exceed the requirements of these Specifications.

1.3 DELIVERY, STORAGE AND HANDLING

A. Exercise care during loading, transporting, unloading, and handling to prevent damage of any nature to interior and exterior surfaces of pipe and fittings.

B. Do not drop pipe and fittings.

C. Materials will be stored at the Kittery Water District, State Road.

D. Assure that materials are kept clean and dry.

E. Do not store materials directly on the ground.

F. Follow manufacturer's specific instructions, recommendations and requirements.

PART 2 - PRODUCTS

2.1 MATERIALS

A. Materials are specified in the following Sections of this Division.

PART 3 - EXECUTION

3.1 INSPECTION

A. Provide all labor necessary to assist the Engineer to inspect pipe, fittings, gaskets, and other materials.

B. Carefully inspect all materials at the time of delivery and just prior to installation.

C. Carefully inspect all pipe and fittings for:

1. Defects and damage.
2. Deviations beyond allowable tolerances for joint dimensions.
3. Removal of debris and foreign matter.

D. Examine areas and structures to receive piping for:

1. Defects, such as weak structural components, which adversely affect the execution and quality of work.
2. Deviations beyond allowable tolerances for pipe clearances.

E. All materials and methods not meeting the requirements of this Contract will be rejected.
F. Immediately remove all rejected materials from the project site.
G. Start work only when conditions are corrected to the satisfaction of the Engineer.

3.2 INSTALLATION

A. General:
   1. Install all pipe and fittings in strict accordance with the manufacturer's instructions and recommendations and as specified herein.
   2. Install all pipes and fittings in accordance with the lines and grades shown on the Drawings and as required for a complete installation.
   3. Install adaptors, acceptable to the Engineer, when connecting pipes constructed from different materials. Join PVC to cast iron fittings according to manufacturer's instructions.

B. Installation in Trenches:
   1. Firmly support the pipe and fittings on bedding material as shown on the Drawings and as specified in the appropriate Sections of these Specifications.
   2. Do not permanently support the pipe or fittings on saddles, blocking stones, or any material which does not provide firm and uniform bearing along the outside length of the pipe.
   3. Thoroughly compact the material under the pipe to obtain a substantial unyielding bed shaped to fully support the pipe.
   4. Excavate suitable holes for the joints so that only the barrel of the pipe receives bearing pressure from the supporting material after placement.
   5. Lay each pipe length so it forms a close joint with the adjoining length and bring the inverts to the required grade.
   6. Do not drive the pipe down to grade by striking it with a shovel handle, timber, rammer, or any other unyielding object.
   7. When each pipe length has been properly set, place and compact enough of the bedding material between the pipe and the sides of the trench to hold the pipe in correct alignment.
   8. After filling the sides of the trench, place and lightly tamp bedding material to complete the bedding as shown on the Drawings.
   9. Take all necessary precautions to prevent floatation of the pipe in the trench.
   10. Bedding and backfill for all pipe materials shall be as specified in Section 02200, and as shown on the Drawings.

C. Temporary Plugs:
   1. When pipe installation work in trenches is not in progress, close the open ends of the pipe with temporary watertight plugs.
   2. If water is in the trench when work is resumed, do not remove plugs until all danger of water entering the pipe is eliminated.
   3. Do not use the pipelines as conductors for trench drainage during construction.

3.3 CLEANING AND TESTING

A. All cleaning and testing shall be performed as specified in Section 02675.

END OF SECTION

SECTION 02615

DUCTILE IRON PIPE

PART 1 - GENERAL

1.1 DESCRIPTION

A. Work Included: Install ductile iron pipe of the type(s) and size(s) in the location(s) shown on the Drawings and as specified herein. Pipe furnished by the Kittery Water District, and stored at the State Road District office.

B. Related Work Specified Elsewhere: "Pipe and Pipe Fittings - General" is specified in the appropriate Section in this Division.

1.2 QUALITY ASSURANCE

A. Standards (As Applicable):

1. Cement-mortar lining for water: ANSI A21.4 (AWWA C104).
2. Rubber gasket joints: ANSI A21.11 (AWWA C111).
3. Ductile iron pipe thickness: ANSI A21.50 (AWWA C150).
4. Ductile iron pipe centrifugally cast in metal or sand lined molds: ANSI A21.51 (AWWA C151).
5. Pipe flanges and fittings: ANSI B16.1 and ANSI A21.10 (AWWA C110).
6. Threaded, flanged pipe: ANSI A21.15 (AWWA C115).
7. Cast and ductile iron fittings: ANSI A21.10 (AWWA C110).
8. Ductile Iron Compact Fittings: ANSI 21.53 (AWWA C153).

1.3 DELIVERY, STORAGE & HANDLING

A. Exercise extra care when handling ductile iron pipe because it is comparatively brittle.

B. Exercise extra care when handling cement lined pipe because damage to the lining will render it unfit for use.

C. Protect the spherical spigot ends and the plain ends of all pipe during shipment by wood lagging securely fastened in place.

PART 2 - PRODUCTS

2.1 MATERIALS

A. Pipe:

1. Unless otherwise shown on the Drawings, the minimum thickness of ductile iron pipe shall be:
   a. For pipe 6 inches in diameter and larger: Class 52.
   b. Pipe with flanges: Class 53.
2. Pipe for use with sleeve type couplings shall have plain ends (without bells or beads) cast or machined at right angles to the axis.

3. Pipe shall be double thickness cement lined and seal coated unless noted otherwise on the Drawings and except for air piping lines which shall be completely unlined.
4. Pipe for use with split type couplings shall have ends with cast or machined shoulders or grooves that meet the requirements of the manufacturer of the couplings.
5. Factory applied bituminous coatings shall be furnished on the exterior of all underground piping unless specified otherwise.
6. The outside of pipe within structures and exposed shall not be coated with bituminous coating, but shall be thoroughly cleaned and given one shop coat of Intertol Rustinhibitive Primer 621 by Koppers Co.; Multiprime by PPG Industries; Chromox 13R50 Primer made by Mobil Chemical Co.; or equivalent.

B. Joints (as shown on Drawings or as specified):
1. Flanged:
   a. Provide specially drilled flanges when required for connection to existing piping or special equipment.
   b. Flanges shall be long-hub screwed tightly on pipe by machine at the foundry prior to facing and drilling.
   c. Gaskets:
      (1) Ring type of rubber with cloth insertion.
      (2) Thickness of gaskets 12 inches in diameter and smaller: 1/16 inch.
      (3) Thickness of gaskets larger than 12 inches in diameter: 3/32 inch.
      (4) On high temperature applications such as air lines, the gaskets shall be suitable for service from 40°F to 200°F.
   d. Fasteners:
      (1) Make joints with bolt, studs with a nut on each end, or one tapped flanged with a stud and nut.
      (2) The number and size of bolts shall meet the requirements of the applicable ANSI standard.
      (3) Nuts, bolts, and studs shall be Grade B meeting the requirements of ASTM A307.
      (4) After jointing, coat entire joint with bituminous material compatible with pipe coating unless other coating required by Section 09900.
   e. When applicable, provide and install flange clamps as shown on the Drawings.
2. Push-on and Mechanical Joint:
   a. The plain ends of push-on pipes shall be factory machined to a true circle and chamfered to facilitate fitting the gasket.
   b. Provide gaskets manufactured from a composition material suitable for exposure to the fluid to be contained within the pipe. On high temperature applications such as air lines, the gaskets shall be suitable for service from 40°F to 200°F.
      (1) In the event contaminated soils are encountered nitrite gaskets shall be used.

c. Bolts and nuts for buried mechanical joints shall be made of A588 steel.

3. Grooved split ring couplings, sleeve couplings, flexible joints and couplings, shall be supplied as specified in "Couplings and Connectors" Section.
4. Joint Bracing:
   a. Provide joint bracing to prevent the piping from pulling apart under pressure as required and as shown on the Drawings.
   b. Types of bracing:
      (1) Pipe and fittings furnished with approved lugs or hooks cast integrally for use with socket pipe clamps, tie rods, or bridles. Bridles and tie rods shall be a minimum of 3/4 inch diameter except where they replace flange bolts of a smaller size, in which case they shall be fitted with a nut on each side of the pair of flanges. The clamps, tie rods, and bridles shall be coated with bituminous paint in buried installations and shall be coated with the same coatings as the piping system in interior installations after assembly or, if necessary, prior to assembly.
      (2) Mechanical joint follower gland pipe restrainers.
         (a) Ductile iron.
         (b) Ductile iron or A588 steel set screws.
         (c) Working pressure 350 psi, up to 8 inches; 250 psi, 8 inches to 16 inches.
         (d) Test pressure two times working pressure.
      (3) Other types of bracing as shown on the Drawings.
   c. Joint bracing is required on all fittings in addition to required thrust blocks, and as detailed on the Drawings.

PART 3 - EXECUTION

3.1 INSPECTION

A. Provide all labor necessary to assist the Engineer to inspect pipe, fittings, gaskets, and other materials.
B. Carefully inspect all materials at the time of delivery and just prior to installation.
C. Carefully inspect all pipe and fittings for:
   1. Defects, such as weak structural components that adversely affect the execution and quality of work.
   2. Deviations beyond allowable tolerances for pipe clearances.
D. Immediately remove all rejected materials from the project site.

3.2 INSTALLATION

A. Assembling Joints:
   1. Push-on Joints:
      a. Insert the gasket into the groove of the bell.
      b. Uniformly apply a thin film of special lubricant over the inner surface of the gasket that will contact the spigot end of the pipe.

c. Insert the chamfered end of the plain pipe into the gasket and push until it seats against the bottom of the socket.

2. Bolted Joints:
   a. Remove rust preventive coatings from machined surfaces prior to assembly.
   b. Thoroughly clean and carefully smooth all burrs and other defects from pipe ends, sockets, sleeves, housings and gaskets.
3. Flanged Joints:
   a. Insert the nuts and bolts (or studs), finger tighten, and progressively tighten diametrically opposite bolts uniformly around the flange to the proper tension.
   b. Execute care when tightening joints to prevent undue strain upon valves, pumps, and other equipment.
4. Mechanical Joints:
   a. Thoroughly clean, with a wire brush, surfaces that will be in contact with the gaskets.
   b. Lubricate the gasket, bell, and spigot by washing with soapy water.
   c. Slip the gland and gasket, in that order, over the spigot and insert the spigot into the bell until properly seated.
   d. Evenly seat the gasket in the bell at all points, center the spigot, and firmly press the gland against the gasket.
   e. Insert the bolts, install the nuts finger tight, and progressively tighten diametrically opposite nuts uniformly around the joint to the proper tension with a torque wrench.
   f. The correct range of torque (as indicated by a torque wrench) and the length of wrench (if not a torque wrench) shall not exceed:
      (l) Range or Torque: 60-90 ft.-lbs.
      (2) Length of Wrench: l0 inches.
   g. If effective joint sealing is not attained at the maximum torque specified above, disassemble, thoroughly clean, and reassemble the joint. Do not overstress the bolts to tighten a leaking joint.
5. Bell and Spigot Joints:
   a. Thoroughly clean the bell and spigots and remove excess tar and other obstructions.
   b. Insert the spigot firmly into place and hold securely until the joint has been properly completed.

B. Fabrication:
   l. Tapped Connections:
      a. Make all tapped connections as shown on the Drawings or as required by the Engineer.
      b. Make all connections watertight and of adequate strength to prevent pullout.
      c. Drill and tap normal to the longitudinal axis of the pipe.

d. The maximum sizes of taps in pipes and fittings without busses shall not exceed the sizes listed in the appendix of ANS A21.51 based on 2 full threads for ductile iron.

2. Cutting:
   a. Perform all cutting as set forth in AWWA C600.
   b. Carefully chamfer all cut ends to be used with push-on joints to prevent damage to gaskets when pipe is installed.

C. Pipe Deflection:
   1. Push-on and Mechanical Joints:
      a. The maximum permissible deflection of alignment at joints shall be limited to that given in AWWA C600.
   2. Flexible Joints:
      a. The maximum deflection in any direction shall not exceed the manufacturer's instructions and recommendations.

END OF SECTION

SECTION 02616

DUCTILE IRON PIPE FITTINGS

PART 1 - GENERAL

1.1 DESCRIPTION

A. Work Included: Install ductile iron pipe fittings of the type(s) and size(s) in the location(s) shown on the Drawings and as specified herein. Fittings are furnished by the Kittery Water District, and stored at the State Road District office.

B. Related Work Specified Elsewhere: "Concrete, Cradles, Arches, Encasements and Thrust Block - is specified in Division 3".

1.2 QUALITY ASSURANCE

A. Standards:

1. Cement-mortar lining for water: ANSI A21.4 (AWWA C104).
2. Ductile iron fittings: ANSI A21.53 (AWWA C153).
3. Rubber gasket joints: ANSI A21.11 (AWWA C111).
4. Ductile iron compact fittings are not acceptable for this project.

B. Fittings shall be manufactured in the United Stated and/or Canada.

PART 2 - PRODUCTS

2.1 MATERIALS

A. Standard Fittings:

1. Pressure rating of 350 psi for D.I. compact fittings and 250 psi for all others unless indicated otherwise on the Drawings or as specified.
2. Flanged fittings shall be ANSI B16.1, Class 125, unless indicated otherwise.
3. Joints the same as the pipe with which they are used or as shown on the Drawings.
4. Cement lining and seal coat unless noted otherwise on the Drawings.
5. Factory applied bituminous coatings shall be furnished for all underground fittings.

2.2 MANUFACTURER

A. Tyler, or equivalent.

PART 3 - EXECUTION

3.1 INSTALLATION

A. General:

1. Install in strict accordance with the pipe and fitting manufacturer's instructions and recommendations and as specified or as shown on the Drawings.
2. Concrete thrust blocks or other acceptable thrust resistant system is required at all fittings on pressure pipe. Where thrust blocks are used, these shall be placed against undisturbed soil or screened gravel compacted to 95 percent and shall be placed so that the joints are accessible for repairs.

END OF SECTION

SECTION 02626

COPPER SERVICE PIPE

PART 1 - GENERAL

1.1 DESCRIPTION

A. Work Included: Install copper pipe of the type and size and in the locations shown on the Drawings and as specified herein. Pipe furnished by the Kittery Water District, and stored at the State Road District office.

B. Related Work Specified Elsewhere:

1. Pipe & Pipe Fittings - General is specified in Division 2
2. Excavation & Backfill, pavement, dewatering, borrow and bedding are specified in this Division.

1.2 QUALITY ASSURANCE

A. Seamless copper water tube, ASTM B88.

PART 2 - PRODUCTS

2.1 MATERIALS

A. Type K, annealed, 1-inch in diameter.

PART 3 - EXECUTION

3.1 INSTALLATION

A. Jointing

1. Packed on compression joints
   a. Cut pipe squarely.
   b. Ream or file pipe to remove burrs.
   c. Seat pipe in fittings and tighten nut.
2. Adapters: Use as required to connect to existing services.

B. Bending Pipe

1. Bend pipe with suitable tools to provide smooth bend free of any cracks or buckles.
2. Provide "goose neck" in new services as shown on Drawings.

END OF SECTION

SECTION 02641

GATE VALVES

PART 1 - GENERAL

1.1 DESCRIPTION

A. Work Included: Install and test gate valves of the type(s) and size(s) and in the location(s) shown on the Drawings and as specified. Valves furnished by the Kittery Water District, and stored at the State Road District office.

B. Related Work Specified Elsewhere: "Valves and Specialties - General" and "Ductile Iron Pipe" are specified in this Division.

1.2 QUALITY ASSURANCE

A. All gate valves of same type and style shall be manufactured by one manufacturer.

PART 2 - PRODUCTS

2.1 MATERIALS

A. Waterworks type NRS valves (AWWA):

1. Valve Body, bonnet and stuffing box - Cast iron (ASTM A126, C1B), coated inside and out with fusion bonded epoxy meeting AWWA C550.
2. Resilient Wedge - Ductile iron wedge with bonded Nitrile elastomer covering.
3. Stem - Manganese bronze, ASTM B584
4. Stuffing box O-rings
   a. Two O-rings, each nitrile rubber.
   b. Capable of changing under pressure.
5. Wedgenut - Bronze, ASTM B62
6. Bolting - stainless steel Type 18-8, ASTM F593, GP1
7. End Connections
   a. Buried valves - mechanical joints
8. Operation
   a. Buried valves - 2 inch square nut, cast iron, ASTM A126, C1B
   b. Opening Direction – Right (clockwise), **Confirm with Owner.**
9. Manufacturer
   a. AFC, or approved equal.
10. Standards - valves shall meet or exceed AWWA C509, latest edition.

B. Accessories: As shown on the Drawings and required for proper operation.

PART 3 - EXECUTION

3.1 INSTALLATION

A. Install valves with stem position vertical.

B. Valve box vertical and centered over operating nut.

C. Valve box supported during backfilling and maintained vertical.
D. Install and test in accordance with AWWA C500 and AWWA C-509 latest revision.
E. For PVC or PE main, install anchor rods around the valve body or through the mounting lugs and embed the rods in concrete beneath the valve.

END OF SECTION

SECTION 02642

CORPORATION STOPS

PART 1 - GENERAL

1.1 DESCRIPTION

A. Work Included: Install corporation stops of the type(s) and size(s) and in the location(s) shown on the Drawings and as specified herein. Corporation Stops furnished by the Kittery Water District, and stored at the State Road District office.

1.2 QUALITY ASSURANCE

A. All corporation stops shall be manufactured by one manufacturer.

B. Qualifications of Manufacturer: Products have proven reliable in similar installations over a reasonable number of years.

PART 2 - PRODUCTS

2.1 MATERIALS

A. Constructed of brass.

B. Outlet shall have a compression pack joint.

C. Inlet shall have CC thread.

D. 300 psi Working Pressure

E. Acceptable Manufacturers:

1. McDonald
2. Ford Meter Box Company
3. Or equivalent

PART 3 - EXECUTION

3.1 INSTALLATION

A. Install at locations shown on the Drawings and as specified in accordance with manufacturer's instructions.

B. Check and adjust all corporation stops for smooth operation.

END OF SECTION

SECTION 02643

CURB STOPS

PART 1 - GENERAL

1.1 DESCRIPTION

A. Work Included: Install curb stops of the type(s) and size(s) and in the location(s) shown on the Drawings and as specified herein. Curb Stops furnished by the Kittery Water District, and stored at the State Road District office.

1.2 QUALITY ASSURANCE

A. All curb stops shall be manufactured by one manufacturer.
B. Qualifications of Manufacturer: Products shall have proven reliable in similar installations over a reasonable number of years.
C. Acceptable Manufacturers:
   1. McDonald
   2. Ford Meter Box Company
   3. Or equivalent

PART 2 - PRODUCTS

2.1 PRODUCT CONSTRUCTION

A. Constructed of brass.
B. Inlet shall be compression pack joint.
C. Outlet shall be compression pack joint.
D. 300 psi working pressure shall be required.

PART 3 - EXECUTION

3.1 INSTALLATION

A. Install at locations shown on the Drawings and in accordance with manufacturer's instructions.

3.2 ADJUSTMENTS

A. Check and adjust all curb stops for smooth operation.

END OF SECTION

SECTION 02644

HYDRANT ASSEMBLIES

PART 1 - GENERAL

1.1 DESCRIPTION

A. Work Included: Install hydrant assemblies of the type(s) and size (s) and in the locations (s) shown on the Drawings and as specified herein. Hydrant assemblies furnished by the Kittery Water District, and stored at the State Road District office.

B. Hydrant Assemblies consist of:
   1. Hydrant Assembly.
   3. Drainage material, stone furnished by contractor.
   4. Thrust blocking.

C. Related Work Specified Elsewhere:
   1. "Gate Valves" specified in Section 02641.
   2. Excavation and backfill, pavement, dewatering, borrow and bedding are specified in this Division.

1.2 QUALITY ASSURANCE

A. Hydrants shall conform to AWWA C502 and all hydrants shall be from one manufacturer.

B. Gate valves shall conform to AWWA C500.

C. Acceptable Manufacturers:
   1. Waterous - Pacer
   2. Or approved equal.

PART 2 - PRODUCTS

2.1 MATERIALS

A. Fire Hydrants:
   1. Dry barrel type with a 5 inch minimum valve opening.
   2. Two (2) 2-1/2 inch hose connections and one (1) 4-1/2 inch pumper connection.
      a. 2-1/2 inch outlets: 60° V threads, 7-1/2 threads to the inch, external threads 3-1/16 inches, O.D. National Standard threads.
      b. 4-1/2 inch outlet: 4 threads to the inch, external threads 5-3/4 inches, O.D. National Standard threads.
      c. Supply adapters if existing fire fighting equipment does not match the threads specified above.
   3. 150 pounds working pressure and 300 pounds hydrostatic test pressure.
   4. Working parts shall be bronze and open clockwise unless otherwise specified.
   5. Designed with standpipe breaking ring or breakable sections.

6. Supply one (1) collision repair kit for every twenty-five (25) hydrants installed.
7. Caps shall be attached to hydrant body by chains.

B. Gate Valves: Waterworks type non-rising stem AWWA valve as specified in Section 02641.

C. Valve Boxes:
1. Cast iron, minimum thickness 3/10 inch with the word "WATER" cast in covers.
2. Be of such length as required without full extensions.
3. As specified in this Division.

PART 3 - EXECUTION

3.1 INSTALLATION

A. Install hydrants as shown in the details and using manufacturer's written instructions.

B. No hydrant assembly shall be backfilled until approved by the Engineer.

C. Provide drainage material and thrust blocks as shown.

D. Provide barrel extensions as required for hydrant to be installed at proper grade.

E. Provide finish paint on all exposed surfaces. Color shall meet Owner's requirements as approved by the Engineer.

3.2 CLEANING

A. Clean all hydrants of concrete, etc. and repaint as necessary to the satisfaction of the Engineer.

END OF SECTION

SECTION 02645

CURB BOXES

PART 1 - GENERAL

1.1 DESCRIPTION

A. Work Included: Install curb boxes of type (s) and size (s) and in the locations shown on the Drawings and as specified herein. Curb Boxes furnished by the Kittery Water District, and stored at the State Road District office.

B. Related Work Specified Elsewhere: "Valves and Specialties - General" is specified in Division 15.

1.2 QUALITY ASSURANCE

A. All curb boxes shall be manufactured by one manufacturer.

B. Qualifications of Manufacturer: Products have proven reliable in similar installations over a reasonable number of years.

C. Acceptable Manufacturers:

1. Quality Water Products.
2. Or equivalent.

PART 2 - PRODUCTS

2.1 MATERIALS AND FABRICATION

A. Cast iron base piece, steel upper, cast iron lid, and threaded bronze plug with pentagon nut (Rope Thread).

B. Extension type and arch pattern base with 5/8" diameter SS, minimum, 24" stationary rod.

PART 3 - EXECUTION

3.1 INSTALLATION

A. Install as shown on the Drawings and/or as requested by the Engineer.

1. When installation is complete no pressure shall be exerted by the curb box on either the curb stop or the service pipe.

END OF SECTION

SECTION 02646

VALVE BOXES

PART 1 - GENERAL

1.1 DESCRIPTION

A. Work Included: Install valve boxes of type(s) and size(s) and in the locations shown on the Drawings and as specified herein. Valve boxes furnished by the Kittery Water District, and stored at the State Road District office.

1.2 QUALITY ASSURANCE

A. All valve boxes shall be manufactured by one manufacturer.

B. Qualifications of Manufacturer: Products to have been proven reliable in similar installations over a reasonable number of years.

C. Acceptable Manufacturers:

1. Quality Water Products
2. Or Equivalent

PART 2 - PRODUCTS

2.1 MATERIALS

A. The valve box shall be ductile iron, slip type two-piece integral base, 5-1/4 inch shaft. Top section with flanges.

B. Cast or Ductile iron, with the word "Water" cast in covers.

C. Belled Base Section.

PART 3 - EXECUTION

3.1 INSTALLATION

A. Installation as shown on the Drawings and/or as specified herein.

1. When installation is complete, no pressure shall be exerted by valve box on the water main or on the valve.
2. Be of such length as required without full extension. Minimum lap 6 inches.

END OF SECTION

SECTION 02647

COUPLINGS & CONNECTORS

PART 1 - GENERAL

1.1 DESCRIPTION

A. Work Included: Install couplings and connectors of the type(s) and size(s) in the location(s) shown on the Drawings and as specified herein. Couplings and connectors furnished by the Kittery Water District, and stored at the State Road District office.

B. Related Work Specified Elsewhere: "Pipe & Pipe Fittings - General" is specified in this Division.

1.2 QUALITY ASSURANCE

A. Minimum pressure rating equal to that of the pipeline in which they are to be installed.

B. Couplings and connectors, other than those specified herein, are subject to the Engineer's approval.

PART 2 - PRODUCTS

2.1 MATERIALS

A. All Couplings and Connectors:
   1. Gasket Materials: Composition suitable for exposure to the liquids to be contained within the pipes.
   2. Diameters to properly fit the specific types of pipes on which couplings and connectors are to be installed.

B. Sleeve Type Couplings (When Applicable):
   1. Buried Couplings (for joining pipe of similar diameters):
      a. Constructed from malleable or ductile iron.
      b. Solid sleeve with M.J. ends conforming to AWWA C110 or AWWA C153. Sleeve shall be a minimum of 12" long
      c. Bolts - AWWA C-111
      d. Acceptable Manufacturers:
         (1) Tyler
         (2) Or equivalent

C. Flanged Adapters (When Applicable):
   1. For joining plain end or grooved end pipe to flanged pipes and fittings.
   2. Adapters shall conform in size and bolt hole placement to ANSI standards for steel and/or cast iron flanges 125 or 150 pound standard unless otherwise required for connections.
   3. Buried Sleeve Type:
      a. Constructed from cast iron.
      b. Bolts: ASTM A588 steel or galvanized steel.

c. Acceptable Manufacturers:
   (1) Dresser Manufacturing Co. - Style 38 locking type for plash end, ductile iron, asbestos cement and steel pipes with diameters of 3 inches through 12 inches,
   (2) Clow Corp., Style 248
   (3) Or equivalent.

PART 3 - EXECUTION

3.1 INSTALLATION

A. Sleeve Type Couplings (When Applicable):
   1. Thoroughly clean pipe ends for a distance of 8 inches from the ends prior to installing couplings, and use soapy water as a gasket lubricant.
   2. Slip a follower ring and gasket (in that order) over each pipe and place the middle ring centered over the joint.
   3. Insert the other pipe length into the middle ring the proper distance.
   4. Press the gaskets and followers evenly and firmly into the middle ring flares.
   5. Insert the bolts, finger tighten and progressively tighten diametrically opposite nuts uniformly around the adapter with a torque wrench applying the torque recommended by the manufacturer.
   6. Insert and tighten the tapered threaded lock pins.

B. Buried Epoxy Coated Steel Couplings: Thoroughly coat all exterior surfaces, including nuts and bolts after assembly and inspection by the Engineer with a coal tar approved by the Engineer. Prior to coating, roughen the epoxy with emory paper and follow with a solvent cleaner (aeromatic similar to xylol). Dry film thickness of the coal tar is to be 12-16 mils.

C. Install thrust rods, supports, and other provisions to properly support pipe weight and axial equipment loads.

END OF SECTION

SECTION 02650

BURIED UTILITY MARKINGS

PART 1 - GENERAL

1.1 DESCRIPTION

A. Work Included:

1. This work shall consist of providing utility line markings installed above all buried lines installed as part of this contract as indicated on the Drawings and replacing existing markings disturbed as part of this contract.

B. Related Work Specified Elsewhere:

1. Pipe, excavation, backfill, insulation are specified in the appropriate Sections in this Division.

PART 2 - PRODUCTS

2.1 MATERIALS

A. Materials and color shall be in accordance with latest AASHTO specifications for pipe and utility marking.

B. For ferrous pipe material use 0.004" minimum polyethylene film; 6" wide clearly marking type of buried utility

C. For non-ferrous pipe material (e.g. Concrete, PVC, PE, etc.) use detection tape composit of polyethylene and metallic core 6" wide clearly marking type of buried utility.

D. Seton Identification Products, New Haven, CT, or equal.

PART 3 - EXECUTION

3.1 INSTALLATION

A. Marking tape shall be installed over utility lines centerline and buried 24" below grade.

B. Markings damaged during opening of trench shall be reinstalled with 2' overlap at broken sections.

END OF SECTION

SECTION 02675

CLEANING, TESTING AND CHLORINATION OF WATER MAINS

PART 1 GENERAL

1.1 DESCRIPTION

A. The scope of this work will be accomplished by the Kittery Water District. The Contractor shall facilitate/coordinate as necessary to complete the work.

1.2 QUALITY ASSURANCE

A. Standards (as applicable):
   1. All work shall be in accordance with this specification and AWWA C651. Where conflicts appear between these specifications and AWWA C651 the more stringent requirement shall apply.
   2. Chlorine solution for disinfecting water mains and appurtenances shall be made from either liquid sodium hypochlorite, or solid calcium hypochlorite, which shall conform to the latest AWWA B300 Standard for Hypochlorite.
   3. Chlorine test kits shall be as described in the current edition of AWWA M12 - Simplified Procedures for Water Examination.
   4. Disposal of chlorinated water as per AWWA C651, Appendix B.

1.3 COORDINATION

A. Use of water will only be as approved and coordinated by the Owner.

B. All flushing, pressure and leakage testing and chlorinating shall be done by the Contractor in the presence of the Engineer and in the presence of the local plumbing or building inspector in accordance with the requirements of the local and state plumbing codes and the appropriate Sections of these Specifications, at no additional cost to the Owner.

PART 2 - PRODUCTS

2.1 MATERIALS

A. Each temporary blow-off shall consist of a corporation cock, type K copper tubing and a curb stop, each of not less than 1-inch diameter.

B. A pumping unit or proportionate feeder suitable for delivering a hypochlorite solution to the isolated main shall be provided. The unit used shall prevent chlorine solution from flowing back into the existing system.

PART 3 - EXECUTION

3.1 GENERAL

A. Thoroughly clean all piping prior to testing. Remove all dirt, dust, oil, grease and other foreign material. Exercise care while cleaning to avoid damage to linings and coatings.

B. Supply all labor, equipment, materials, gages, and pumps required to conduct the tests.

The drawings do not detail taps, gages, plugs and other related materials required to perform testing. These materials are the responsibility of the Contractor.

C. Flushing, testing and chlorinating of the mainline shall closely follow main laying work. As the mainline is installed, it shall be tested approximately every 1,000 feet, or between line valves, whichever is less. Should the mainlines fail to be flushed, tested, and chlorinated as specified, the main laying work shall be suspended until the flushing, testing and chlorinating is done.

D. Final acceptance of the water main shall be based on successful (negative) results of bacteriological tests, which shall be done on samples taken from the main following chlorination and final flushing. Locations of samples shall be determined by the Engineer.

E. The testing and related procedures described herein, shall be performed in the order listed.

F. The Contractor, with the assistance of the Owner, shall fill mains as slowly as practicable so as not to cause dirty water and serious pressure drops within the existing system.

3.2 FLUSHING

A. All new water mains, and existing water mains that have been drained and cut-into for making connections, shall be thoroughly flushed prior to pressure or leakage testing or final chlorination. Flushing shall be accomplished by partially opening and closing valves, hydrants, and blowoffs, several times, under expected line pressure, with flow velocities of not less than 2.5 feet per second, in the main. The size and number of hydrant outlets and/or main taps to provide the required flow (at 40 psi residual pressure) is as follows:

Minimum Required Flow and Openings Required to Flush Water Mains
(Assuming 40 psi Residual Pressure in Water Mains)

Main Diameter (in.)	Flow Required to Produce 2.5 fps in Main (gpm)	Minimum Size of Taps (in.)	Hydrant Outlets	
			Number	Size (in.)
4	100	15/16	1	2-1/2
6	220	1-3/8	1	2-1/2
8	390	1-7/8	1	2-1/2
10	610	2-5/16	1	2-1/2
12	880	2-13/16	1	2-1/2
16	1565	3-5/8	2	2-1/2

1. If less than a 40 psi residual is available in the main, with the size tap shown above then a larger, or more tap(s) or hydrant outlets will be required, as determined by the Engineer.
2. The length of time for flushing, at or above the minimum allowable velocity, shall be computed to allow a minimum of 3 times the total volume of water in the main to be flushed to waste. Flushing shall be done in the presence of the Engineer.

3.3 AIR REMOVAL

A. Following flushing, and before applying the specified test pressure, air shall be completely expelled from the mains, valves, and hydrants. After all air has been expelled, the air blowoffs can be closed, and the test pressure applied.

3.4 PRESSURE TEST

A. All new water mains, or any sections thereof, shall be subjected to a hydrostatic pressure of at least 1.5 times the working pressure that will exist at the point of testing, or 150 psi, whichever is greater. Test pressures shall meet the following requirements:
   1. Be of at least 2-hour duration.
   2. Be not less than 1.25 times the expected system working pressure at the highest point along the test section.
   3. Not exceed main or thrust-restraint design pressures.
   4. Not vary by more than + 5 psi for the duration of the test.
   5. Not exceed 2-times the rated pressure of the valves or hydrants when the pressure boundary includes closed valves or hydrants. Valves shall not be operated in either direction at differential pressure greater than the rated pressure.
   6. Not exceed 2-times the rated pressure of the valves when the pressure boundary of the test section includes closed butterfly valves or resilient seated gate valves.

B. Each section of main shall be slowly raised to the specified test pressure for two separate periods. The first period shall be for 15-minutes, after which the pressure shall be allowed to drop slowly back to system pressure. The pressure shall then be slowly raised again to the specified test pressure and maintained for 2-hours. The test pressure shall be based on the elevation of the lowest point of the main, in the test section and shall be corrected to the elevation of the test gauge, as directed by the Engineer. The test pressure shall be applied by means of a pump connected to the main, in an approved manner, and which will prevent any backflow into the existing system. Valves shall not be operated in either the closing or opening direction, at differential pressure greater than the rated pressure.

C. Any exposed main, fittings, valves, hydrants and joints shall be carefully examined during the test. Any damaged or defective main, fittings, hydrants, or valves discovered following, or as a result of the pressure test shall be repaired or replaced with sound material. If faulty materials are removed and replaced, the pressure testing procedure shall be repeated.

3.5 LEAKAGE TEST

A. Leakage testing shall be conducted concurrently with the pressure test.

B. Leakage is defined as the quantity of water that must be pumped into the new main during the test, or any section thereof, required to maintain pressure within 5 psi of the starting test pressure. Leakage shall be recorded to the nearest one-tenth of a gallon. The Contractor shall employ qualified personnel throughout the testing. Leakage shall not be measured by a drop in pressure over a period of time.

C. Leakage in the test section must be less than an amount determined as follows:

$$L = \frac{SD(P^{0.5})}{133{,}200}, \text{ where}$$

L = allowable gallons of leakage per hour
S = the length of main tested, in feet
D = the nominal main diameter in inches
P = the average test pressure during the test, in psi

D. The leakage formula is based allowable leakage of 11.65 gallons per day, per mile of main, per inch (nominal) of main diameter, at a pressure of 150 psi. Allowable leakage under various conditions is shown below.

Allowable Leakage per 1,000 Feet of Mainline

Average Test Pressure(psi)	Nominal Diameter (inches)						
	6	8	10	12	16	20	24
250	0.71	0.95	1.19	1.42	1.90	2.37	2.85
225	0.68	0.90	1.13	1.35	1.80	2.25	2.70
200	0.64	0.85	1.06	1.28	1.70	2.12	2.55
175	0.59	0.80	0.99	1.19	1.59	1.98	2.38
150	0.55	0.74	0.92	1.10	1.47	1.84	2.21
125	0.50	0.67	0.84	1.01	1.34	1.68	2.01
100	0.45	0.60	0.75	0.90	1.20	1.50	1.80

1. If the mainline under test contains sections of various diameters, the allowable leakage will be the sum of the computed leakage for each size.
2. When testing against closed metal seated valves, an additional leakage shall be allowed per closed valve of 0.0078 gallons per hour, per inch of nominal valve diameter.
3. When hydrants are in the test section, the test shall be made against the closed hydrant(s).

E. Acceptance shall be determined on the basis of allowable leakage. If leakage in any test is greater than that specified, the Contractor shall locate and make repairs as necessary until the leakage is within the specified allowance.
1. All visible leaks are to be repaired regardless of the amount of leakage.
2. All water mains shall be pressure and leakage tested in the presence of the Engineer, in order to qualify for acceptance.

3.6 CHLORINATION

A. The method of chlorination shall be the *Continuous Feed Method* as described hereinafter. Chlorination procedures will not be allowed until acceptable flushing and pressure testing has been performed and accepted. The continuous feed method consists of the following steps:

1. Prior to the application of chlorine, confirm that valves are closed to prevent back-feeding chlorine solution into the existing system.
2. At a point not more than 10 feet downstream from the beginning of the new main, fill the main with chlorinated potable water, having an initial concentration of 25 mg/l free chlorine residual.
   a. Water from the existing distribution system or other approved source of supply shall flow at a constant measured rate, into the new main. In the absence of a meter, the rate may be approximated by measuring the discharge rate at the end of the test section with a pito-gauge or by measuring the time to fill a container of known volume.
3. The application of chlorine solution shall continue until the entire main is filled with water having 25 mg/l of free available chlorine. To assure that 25 mg/l free chlorine residual concentration is achieved throughout the test section, the Contractor shall measure chlorine concentration at regular intervals.

B. The amount of chlorine required to obtain a concentration of 25 mg/l per 100 feet of various diameter mains is as follows.

Chlorine Required to Obtain 25 mg/l per 100 feet of Various Diameters

Main Diameter (inches)	Sodium Hypochlorite (gallons)				Calcium Hypochlorite (ounces)
	5% Available Chlorine	10% Available Chlorine	12.5% Available Chlorine	15% Available Chlorine	65% Available Chlorine
4	0.03	0.02	0.02	0.01	0.32
6	0.08	0.04	0.03	0.03	0.75
8	0.13	0.07	0.06	0.06	1.30
10	0.20	0.10	0.09	0.07	2.10
12	0.28	0.15	0.12	0.10	2.95
16	0.50	0.25	0.22	0.17	5.30
20	0.80	0.40	0.34	0.28	8.40
24	1.15	0.60	0.50	0.40	12.00

1. The above quantities are to be added to a sufficient quantity of water, dissolved, and mixed. The solution shall be injected into the main as specified.
2. The quantities shown are based on concentrations of available chlorine by volume. Extended or improper storage may have caused a loss of available chlorine.
3. For concentrations of 50 ppm, double the quantities listed.

C. The chlorinated water shall be retained in the main for a minimum of 24-hours. At the end of this 24 hour period, retest portions of the main to confirm that a minimum of 10 mg/l free available chlorine residual exists in the main. If the residual chlorine is less than 10 mg/L, acceptable bacteria results may not be obtained.

3.7 FINAL FLUSHING OF CHLORINATED WATER

A. After the initial 24-hour period period, the heavily chlorinated water shall be flushed from the main until chlorine measurements show the concentration in water leaving the main is no higher than that generally prevailing in the system.

B. The Contractor shall obtain approval of location(s) for discharging the heavily chlorinated water, which will result from the chlorination procedures. Great care shall be exercised in the selection of the rate of flow and the discharge points, in order to minimize complaints, and damage to public or private property.

C. The heavily chlorinated water shall be suitably and thoroughly neutralized prior to disposal into the environment. In no case shall chlorinated or neutralized water be discharged directly into a water body. If necessary, state, federal, and local regulatory agencies should be contacted to determine special provisions for the disposal of heavily chlorinated water.

3.8 BACTERIOLOGICAL TESTS

A. After final flushing and before the water main is placed in service, water samples shall be collected twice (24-hours apart) by the Engineer or Owner and tested for bacteriological quality in accordance with standard methods. Water samples shall show the absence of coliform organisms and background bacteria.

B. If, during construction, trench water has entered the main, or if in the opinion of the Engineer excessive quantities of dirt or debris have entered the main, bacteriological samples shall be taken at intervals of approximately 200 feet and shall be identified as to location. Samples shall be taken of water that has stood in the main for at least 24-hours after final flushing has been completed.

C. Samples shall be obtained through a corporation cock and copper tubing installed by the Contractor. The use of hose or fire hydrants for sampling is done so at the Contractors risk.

D. The Engineer or Owner shall deliver samples to a laboratory approved by the Department of Health Services for bacterial analysis. The Owner shall pay for the cost of analysis. Only after each consecutive sample is approved shall the mains be incorporated into the water system. In the event that positive reports of contamination are received, the mains shall be flushed and chlorinated as many times as may be necessary to obtain approved (negative) results.

3.9 RE-CHLORINATION

A. If the initial chlorination fails to produce satisfactory bacteriological samples, the main shall be re-flushed and re-sampled.

3.10 CHLORINATION PROCEDURES WHEN CUTTING INTO OR REPAIRING EXISTING MAINS

A. Trench Treatment. If during excavation the trench is either wet or filled with water, it is recommended that liberal quantities of hypochlorite tablets be applied to open trench areas to lessen the danger from pollution.

B. The interior of all main and fittings used in making a repair shall be swabbed or sprayed with a 1 percent hypochlorite solution before they are installed.

C. If valve and hydrant locations permit thorough flushing toward the work location from both directions, it shall be done. Flushing shall be started as soon as the repairs are

completed and shall be continued until discolored water is eliminated.

D. Slug Chlorination. Where practical and in addition to the procedures above, a section of main in which the break is located shall be isolated. All service connections shall be shut off, and the section flushed and chlorinated by the *Slug Chlorination* method. This method allows the chlorine dose to be increased to as much as 300 mg/l, and the contact time reduced to as little as 1-hour. After chlorination, the section shall be properly flushed until discolored water is eliminated and the water is free of noticeable chlorine odor.

E. Bacteriological samples shall be taken after repairs. If the direction of flow is unknown, samples shall be taken on each side of the main break. If positive samples are recorded, daily sampling shall be continued until two consecutive negative samples are recorded.

END OF SECTION

DIVISION 3

CONCRETE WORK

Scope of Work

Provide, install and test all site work and appurtenant work in complete accordance with the Drawings and Specifications.

Contractor's Duties

Except as specifically noted, provide and pay for all labor, materials, equipment, tools, machinery, water, heat, other facilities and services necessary for proper execution and completion of work.

Contents of Division

Section No.	Section Title	Page No.
03319	Pre-Cast Concrete Thrust Blocks	03319-1

END OF SECTION

SECTION 03319

PRE-CAST CONCRETE THRUST BLOCKS

PART 1 - GENERAL

1.1 DESCRIPTION

A. Work Included: Install pre-cast concrete thrust blocks for pipes in the location(s) and of the dimension(s) and shapes shown on the Drawings, as directed by the Engineer and as required to rigidly support pipes.

B. The Owner shall provide pre-cast concrete thrust blocks, if cast-in-place thrust blocks are not used as indicated on the drawings.

1.2 QUALITY ASSURANCE

A. Acceptable Manufacturers:

1. Superior Concrete, Auburn, ME
2. American Concrete, Bangor, ME
3. Or approved equal.

1.3 SUBMITTALS

A. Submit dimensioned drawings for each type of thrust block required, as indicated on the drawings.

PART 2 - PRODUCTS

2.1 MATERIALS

A. Thrust blocks shall be manufactured of 2,000 psi concrete or greater.

PART 3 - EXECUTION

3.1 INSTALLATION

A. Thrust blocks shall be installed as shown on the Drawings, to secure pipe and fittings and properly compacted as specified.

B. Secure pipe to prevent movement and floatation during the placement of the concrete.

END OF SECTION

Environmental Summary Sheet

PIN #: 11584.00 **Town: Kittery**
Environmental Office Contact: **Ben Condon (ben.condon@maine.gov) 592-0921**
Coordination & Permits Manager: Matt Steele **Date Submitted: 10/30/07**
Database/Projex ☒

☒ **Section 106 and Tribal Consultation**

Architectural Resources	PA ☐	Applicable☒	Approved ☒
Archeological Resources	PA ☐	Applicable☒	Approved ☒
Tribal Consultation	Tribal Letters Sent ☒		Approved ☐
Town & Local Hist. Society Contacted	Yes ☐	No☒	

☒ **4(f) and 6(f)**

Section 4(f)

Are there Right of Way Takes or Easements on Public Park Property	☐ Yes	☒ No
Are there Right of Way Takes or Easements on Public Recreational Property	☐ Yes	☒ No
Are there Right of Way Takes or Easements on Public Wildlife Refuge Property	☐ Yes	☒ No
Are there Right of Way Takes or Easements on Historic Eligible or Listed Property	☐Yes	☒ No
Are there Right of Way Takes or Easements on Property within a Historic District	☐Yes	☒ No
Has MHPC Determined an Adverse Effect	☐Yes	☒ No
Is a Programmatic or Full 4(f) Document Required	☐Yes	☒ No

LAWCON 6(f) N/A ☒ Applicable☐ Approved ☐

☒ **FEMA** GIS Floodplains Checked ☒ N/A ☒ Applicable☐ Approved ☐

☒ **Maine Department of Inland Fisheries and Wildlife (MDIFW) Essential Habitat**

GIS Essential Habitats Checked ☒

Eagle Nest	N/A ☒	Applicable ☐	Approved ☐
Piping Plover	N/A ☒	Applicable ☐	Approved ☐
Roseate Tern	N/A ☒	Applicable☐	Approved ☐

☒ **Maine Department of Conservation/ Public Lands, Submerged Land Lease** N/A ☒ Applicable ☐

☒ **Land Use Regulation Commission (LURC)** Not Applicable ☒ No permit Required ☐

Notice	☐	Approved ☐
Permit	☐	Approved ☐

☒ **Maine Department of Environmental Protection (MDEP) Site Location of Development**

N/A ☒ Applicable ☐ Approved ☐

☒ **Maine Department of Environmental Protection (MDEP), Natural Resource Protection Act**

No permit required ☐
Exempt ☒ (Must use erosion and sediment control and not block fish passage.)

PBR	☐	Approved ☐
Tier 1	☐	Approved ☐
Tier 2	☐	Approved ☐
Individual	☐	Approved ☐

☒ **Army Corps of Engineers (ACOE), Section 10 of the Rivers and Harbors Act and Section 404 of the Clean Water Act.**

No permit required ☐

Category 1-NR☒	Approved ☒
Category 2☐	Approved ☐
Category 3☐	Approved ☐

NOTE: If project requires a Category 2 or 3 Permit from the ACOE, then the MaineDOT Resident **must** fill out a **"Work Start Notification Form"** and a **"Compliance Certification Form" (when project has been completed)** and send them to the address listed on the forms.

☐ **IN-STREAM TIMING RESTRICTIONS:** 105 Special Provision ☐ n/a ☒ No In-stream Work

Dates instream work is allowed:

☒ **NEPA Complete**

☒ Special Provision 656, Erosion Control Plan ☒ Special Provision 203, Dredge Spec and/or Hazardous Waste Spec

KITTERY
ROUTE 1
HIGHWAY IMPROVEMENTS
PIN 11584.00

GENERAL NOTE

Maine Department of Transportation (MaineDOT) performed environmental borings at numerous locations along the project and did not detect obvious indications of subsurface contamination in the right-of-way. However, in light of the commercial surroundings along the project, the contractor shall employ appropriate health and safety measures to protect its workers against hazards associated with working near petroleum-impacted soils. Furthermore, the Contractor shall remain alert for any additionally evidence of contamination. If the Contractor encounters evidence of soil or groundwater contamination, the Contractor shall secure the excavation, stop work in the contaminated area, and immediately notify the Resident. The Resident shall contact the Hydrogeologist in MDOT's Environmental Office at 207-624-3100 and the Maine Department of Environmental Protection at 800-482-0777. Work may only continue with authorization from the Resident.

Applicant: General Public, State of Maine
Permit Number: NAE-2005-2164

Effective Date: October 11, 2005
Expiration Date: October 11, 2010

DEPARTMENT OF THE ARMY
PROGRAMMATIC GENERAL PERMIT
STATE OF MAINE

The New England District of the U.S. Army Corps of Engineers hereby issues a Programmatic General Permit (PGP) that expedites review of minimal impact work in coastal and inland waters and wetlands within the State of Maine.

I. GENERAL CRITERIA

Activities with minimal impacts, as specified by the terms and conditions of this PGP and on the attached Appendix A, Definition of Categories, are either:

Category 1: Non-reporting. Eligible without screening (provided the authorizations are obtained which this permit states are necessary for activities to be eligible for authorization under this non-reporting category), or,

Category 2: Reporting. Require screening and a written determination of eligibility under the PGP by the Corps after coordination with the U.S. Fish and Wildlife Service (U.S. FWS), U.S. Environmental Protection Agency (EPA) and the National Marine Fisheries Service (NMFS).

This PGP does not affect the Corps Individual Permit review process or activities exempt from Corps jurisdiction.

II. ACTIVITIES COVERED:

Work and structures that are located in, or that affect, navigable waters of the United States (U.S.) (Corps regulates under Section 10 of the Rivers and Harbors Act of 1899); the discharge of dredged of fill material into waters of the United States (Corps regulates under Section 404 of the Clean Water Act); and the transportation of dredged material for the purpose of disposal in the ocean (Corps regulates under Section 103 of the Marine Protection, Research and Sanctuaries Act).

III. PROCEDURES:

A. State Approvals

For projects authorized pursuant to this PGP, the following State approvals are also required. The applicable permits must be obtained in order for this PGP authorization to be valid (applicants are responsible for ensuring that all required State permits and approvals have been applied for and obtained):

- Maine Department of Environmental Protection (DEP): Natural Resources Protection Act (NRPA) permit, including permit-by-rule and general permit authorizations (NRPA permit issuance constitutes both the state permit and the WQC); Site Location of Development Act permit; and Maine Waterway Development and Conservation Act permit.
- Maine Department of Conservation: Land Use Regulation Commission (LURC) permit.
- Maine Department of Marine Resources: Lease.
- Maine Department of Conservation, Bureau of Parks and Lands, Submerged Lands: Lease

NOTE: This PGP may authorize projects that are not regulated by the State of Maine (e.g., seasonal floats or moorings).

B. Corps Authorizations

CATEGORY 1 (Non-Reporting)

Eligibility Criteria

Activities in Maine may proceed without application or notification to the Corps if they:

- Are subject to Corps jurisdiction (see General Condition 2, Page 7),
- Meet the definition of Category 1 in Appendix A - Definition of Categories, and
- Meet the General Conditions of the PGP (see Pages 7 - 15).

If the State or the Corps does not contact the applicant for DEP's Tier One permits during the DEP's Tier One 30-day review period, Corps approval may be assumed and the project may proceed. Refer to the Federal Screening Procedures (see Page 4) for additional information regarding screening.

Project proponents seeking Category 1 authorizations are not relieved of the obligation to comply with this PGP's General Conditions (see Page 7) and other Federal laws such as the National Historic Preservation Act, the Endangered Species Act (ESA) and the Wild and Scenic Rivers Act. Therefore, consultation with the Corps and/or outside experts such as the Maine Historic Preservation Commission and the appropriate Indian tribes is recommended when there is a high likelihood of the presence of resources of concern.

Although Category 1 projects are non-reporting, the Corps reserves the right to require screening under Category 2 or Individual Permit review if there are concerns for the aquatic environment or any other factor of the public interest (see General Condition 4, Discretionary Authority, Page 7).

Work that is not regulated by the State of Maine, but is subject to Corps jurisdiction, is eligible for Corps authorization under this PGP in accordance with the review thresholds and conditions contained herein. The Maine DEP and LURC have waived WQC for projects authorized under Categories 1 and 2 of this PGP and not subject to jurisdiction under the NRPA and LURC Land Use Districts and Standards.

Enforcement cases. This PGP does not apply to any existing or proposed activity in Corps jurisdiction associated with an on-going Corps or EPA enforcement action until such time as the enforcement action is resolved or the Corps determines that the activity may proceed independently without compromising the enforcement action. The Corps may choose not to accept applications or issue permits to any applicant with outstanding violations.

CATEGORY 2 (Reporting – Requiring Screening)

Eligibility Criteria

Activities in Maine require written approval from the Corps if they:

- Are subject to Corps jurisdiction (see General Condition 2, Page 7),
- Meet the definition of Category 2 in Appendix A - Definition of Categories, and
- Meet the General Conditions of the PGP (see Pages 7 - 15),

These projects will be reviewed through interagency screening (see Federal Screening Procedures below) to determine whether such activities may be authorized under this PGP. To be eligible and

subsequently authorized, an activity must result in minimal impacts to the aquatic environment as determined by the Corps based on comments from the review team and the criteria listed above. Mitigation may be required to compensate for unavoidable impacts to ensure net effects of a project are minimal.

For Category 2 projects, applicants must obtain a written authorization from the Corps and State approvals as stated on Page 1.

To ensure compliance with the conditions of this PGP, consultation with the Corps and outside experts is required. This includes consultation with the Maine Historic Preservation Commission and the appropriate Native American Indian tribes to ensure compliance with Condition 8. Also, note the review thresholds under Category 2 apply to single and complete projects only (see General Condition 5).

Enforcement cases. See previous section.

Application Procedures

The Corps must review and approve in writing all Category 2 activities. Generally, the State will provide the Corps with a copy of State applications received, but it is ultimately the applicant's responsibility to ensure the Corps receives the application from the State. Therefore, it is recommended that applicants either verify with the Corps receipt of their application from the State (DEP or LURC), or apply directly to the Corps with either a copy of their State application or a Corps application (ENG Form 4345). Applicants must apply directly to the Corps using ENG Form 4345 if the work is not State regulated.

Upon receipt of the application, the Corps will determine if it:
(a) requires additional information (see "information typically required" on the following page);
(b) is appropriate for screening with the Federal resource agencies (see Category 2 Federal Screening Procedures on the following page);
(c) is ineligible under the terms and/or conditions of this PGP; or
(d) will require Individual Permit review, regardless of whether the terms and conditions of this PGP are met, based on concerns for the aquatic environment or any other factor of the public interest (see General Condition 4, Discretionary Authority).

If open water disposal is proposed, the Corps will make a suitability determination, fully coordinated with the Federal resource agencies, before coordinating a project at a joint processing meeting.

All Category 2 applicants shall submit a copy of their application materials to the Maine Historic Preservation Commission and the Indian tribe(s) listed on Page 17, at the same time, or before, they apply to the DEP, LURC, or the Corps, to be reviewed for the presence of historic, archaeological or tribal resources in the permit area that the proposed work may affect. Submittals to the DEP or Corps shall include information to indicate that this has been done (a copy of the applicant's cover letter to Maine Historic Preservation Commission and tribes or a copy of the Historic Preservation Commission and tribal response letters is acceptable).

Information Typically Required

The following information may not be necessary for all projects. Please see www.nae.usace.army.mil for a more comprehensive checklist. Select "Regulatory/Permitting," "Forms" and then "Application and Plan Guideline Checklist." Please check with our Maine office for project-specific requirements.

(a) purpose of project;
(b) 8½"x 11" locus map. 8½"x 11" plan views of the entire property, including property lines, and project limits with existing and proposed conditions;
(c) typical cross-section views of all wetland and waterway fill areas and wetland replication areas;
(d) legible, reproducible plans. Show mean low water (MLW), mean high water (MHW) and high tide line (HTL) elevations in navigable waters;
(e) each plan should show the NGVD 1929 equivalent for the project's vertical datum (MLW, MLLW, MHW, HTL or other tidal datum for tidal projects) with the vertical units. Do not use local datum;
(f) wetland delineation for the site, Corps wetland delineation data sheets (see web site), and calculations of waterway and wetland impact areas (see General Condition 2);
(g) delineation of submerged aquatic vegetation, e.g., eel grass beds, in tidal waters;
(h) volume, type and source of fill material to be discharged into waters and wetlands, including the area(s) (in square feet or acres) of fill in wetlands, below ordinary high water in inland waters and below the high tide line in coastal waters;
(i) limits of any Federal Navigation Project in the vicinity and State Plane Coordinates for the limits of the proposed work closest to the Federal Navigation Project;
(j) on-site alternatives analysis. Please contact Corps for guidance;
(k) identify and describe potential impacts to Essential Fish Habitat. See General Condition 11 and contact Corps for guidance;
(l) photographs of wetland/waterway to be impacted.

Information typically required for dredging projects:
(a) sediment testing, including physical (e.g., grain-size analysis), chemical and biological testing. For projects proposing open water disposal, applicants are encouraged to contact the Corps as early as possible regarding sampling and testing protocols. Sampling and testing of sediments without such contact should not occur and, if done, would be at the applicant's risk.
(b) the area in square feet and volume of material to be dredged below mean high water;
(c) existing and proposed water depths;
(d) type of dredging equipment to be used;
(e) nature of material (e.g., silty sand);
(f) any existing sediment grain size and bulk sediment chemistry data for the proposed or any nearby projects;
(g) information on the location and nature of municipal or industrial discharges and occurrence of any contaminant spills in or near the project area, location of the disposal site (include locus sheet);
(h) shellfish survey;
(i) identify and describe potential impacts to Essential Fish Habitat (see General Condition 11);
(j) delineation of submerged aquatic vegetation (e.g., eelgrass beds).

Federal Screening Procedures
The Corps will review all complete applications for Category 2 projects requiring Corps approval at interagency screening meetings (or "joint processing" meetings) with the Federal resource agencies (U.S. FWS, EPA and NMFS) to determine whether such activities may be authorized under this PGP. The Federal resource agencies will comprise the interagency review team. The meetings are held at the Corps every three weeks, or coordinated as necessary to provide applicants with a timely response. The Corps and Federal resource agencies, at the branch chief or equivalent level, may agree on certain activities that do not need to be coordinated at these meetings.

If the Corps and Federal resource agencies determine that the activity is eligible for the PGP, the Corps will send an authorization letter directly to the applicant. The Corps will generally issue an eligibility determination within the State's review period, not to exceed 60 days. If the Corps determines that the activity is not eligible under the PGP or that additional information is required, the Corps will notify the applicant in writing and will send a copy of this notification to DEP or LURC.

For projects reviewed with the Federal resource agencies, the agencies may recommend, within ten business days, either 1) special conditions for projects to avoid or minimize adverse environmental effects and to ensure the terms and conditions of the PGP are met, or 2) Individual Permit review. The Corps will determine that a project is ineligible under this PGP and will begin its Individual Permit review procedures if any one of the Federal resource agencies, within ten business days of the screening meeting, expresses a concern within their area of expertise, states the resource or species that could be impacted by the project, and describes the impacts that, either individually or cumulatively, will be more than minimal.

This ten-day notice may be spoken and is not required to be fully documented, but must be confirmed with a written response within an additional ten working days from the date of the spoken comment. Written responses must be signed by the Federal resource agency field supervisor or branch chief, as appropriate, and must identify the affected resource within their area of expertise. The intent of the spoken notification is to allow the Corps to give timely notification to the applicant that additional information is needed and/or an Individual Permit may be required. The Corps may reinstate a project's eligibility under the PGP provided the Federal agencies' concerns are satisfied. The Federal resource agencies may request additional information within their area of expertise within ten business days of the screening meeting. This information shall be commensurate to the level of impact and agreed upon by the Corps. The agencies are allowed an additional ten business days after their receipt of additional information to provide special conditions or a written Individual Permit request to the Corps.

If the applicant is unable to resolve the concerns, the Corps, independently or at the request of the Federal resource agencies, will require an Individual Permit for the project. The applicant will be notified of this in writing, along with information about submitting the necessary application materials.

Minerals Management Service (MMS) Review

Projects with construction of solid fill structures or discharge of fill that may extend beyond the coastline or the baseline from which the territorial sea is measured (i.e., mean low water), must be coordinated with Minerals Management Service (MMS), Outer Continental Shelf (OCS) Survey Group, pursuant to the Submerged Lands Act (43 USC, Section 1301-1315, 33 CFR 320.4(f)). The Corps will forward project information to MMS for their review. The MMS will coordinate their determination with the Department of the Interior (DOI) Solicitor's Office. The DOI will have 15 calendar days from the date MMS is in receipt of project information to determine if the baseline will be affected. No notification to the Corps within 15-day review period will constitute a "no effect" determination. Otherwise, the solicitor's notification to the Corps may be spoken but must be followed with a written confirmation within ten business days from the date of the spoken notification. This procedure will be eliminated if the State of Maine provides a written waiver of interest in any increase in submerged lands caused by a change in the baseline resulting from solid fill structures or fills authorized under this PGP.

Emergency Situations Procedures

Emergency situations are limited to sudden, unexpected occurrences that could potentially result in an unacceptable hazard to life, a significant loss of property, or an immediate, unforeseen, and significant economic hardship if corrective action requiring a permit is not undertaken within a time period less than the normal time needed to process an application under standard procedures. If an emergency situation requires action in less than 30 days after the occurrence, it qualifies for the amended notification procedures described below.

Notification Procedures for Emergency Situations:

Any project proponent may request emergency authorization from the Corps, however the Corps will determine if a project qualifies for these emergency situation procedures. The Federal resource agencies, the Maine Historic Preservation Commission and the tribes will each designate an emergency contact and an alternate in the event the regular contact is unavailable. When an application for Category 2 work is received that the Corps determines is an "emergency" as defined above, the Corps will fax a copy of the plans and Determination of Eligibility to the agency representatives and their alternates. The resource agencies would then have 16 business hours to notify the Corps if they have any comments on authorization of the project under the PGP. Objections to the Corps determination of an "emergency" situation will not be accepted. If no response is received within 16 business hours, the Corps will proceed with a decision on the application. If the resource agencies have comments on the proposal, they will have 16 business hours to put their comments in writing. If written comments from the Federal agencies are not received within 16 business hours, the Corps will proceed with a decision on the application.

If a Federal agency requests that an Individual Permit be required for a project or requests modifications to the project based on concerns within their area(s) of expertise, the Corps will notify the applicant within one business day of receipt of that request that the project as proposed does not qualify for authorization under this PGP and the emergency Individual Permit procedures may be followed. In any event, the Corps will notify the applicant within 16 business hours of commencement of the screening process as to whether the project may proceed under this PGP.

IV. CORPS AUTHORIZATION: INDIVIDUAL PERMIT

Work that is defined in the Individual Permit category of Appendix A – Definition of Categories, or that does not meet the terms and conditions of this PGP, will require an application for an Individual Permit from the Corps (see 33 CFR Part 325.1). The screening procedures outlined for Category 2 projects will only serve to delay project review in such cases. The applicant should submit the appropriate application materials (including the Corps application form) at the earliest possible date. General information and application forms can be obtained at our web site or by calling us (see Page 16). Individual water quality certification and coastal zone management consistency concurrence are required when applicable from the State of Maine before Corps permit issuance. The Federal resource agencies' comments are due within ten working days after the Public Notice's expiration date, unless the Corps receives and approves a written request for a time extension within ten working days after the notice's expiration.

V. PROGRAMMATIC GENERAL PERMIT CONDITIONS:

The following conditions apply to activities authorized under this Maine PGP, including all Category 1 (non-reporting) and Category 2 (reporting – requiring screening) activities:

General Requirements

1. Other Permits. Authorization under this PGP does not obviate the need to obtain other Federal, State, or local authorizations required by law. This includes, but is not limited to, the project proponent obtaining a Flood Hazard Development Permit issued by the town, if necessary. Inquiries may be directed to the municipality or to the Maine Floodplain Management Coordinator at (207) 287-8063. See http://www.maine.gov.

2. Federal Jurisdictional Boundaries. Applicability of this PGP shall be evaluated with reference to Federal jurisdictional boundaries. Applicants are responsible for ensuring that the boundaries used satisfy the Federal criteria defined at 33 CFR 328-329. These sections prescribe the policy, practice and procedures to be used in determining the extent of jurisdiction of the Corps concerning "waters of the U.S." and "navigable waters of the U.S." Wetland boundaries shall be delineated in accordance with the January 1987 Corps of Engineers Wetlands Delineation Manual, located at http://www.usace.army.mil/inet/functions/cw/cecwo/reg/ wlman87.pdf. The U.S. FWS publishes the National List of Plant Species that Occur in Wetlands, located at http://www.nwi.fws.gov. The Natural Resources Conservation Service (NRCS) develops the hydric soil definition and criteria, and publishes the current hydric soil lists, located at http://soils.usda.gov/use/hydric/.

3. Minimal Effects. Projects authorized by this PGP shall have no more than minimal individual and cumulative adverse environmental impacts as determined by the Corps.

4. Discretionary Authority. Notwithstanding compliance with the terms and conditions of this permit, the Corps retains discretionary authority to require Category 2 or Individual Permit review based on concerns for the aquatic environment or for any other factor of the public interest [33 CFR 320.4(a)]. This authority is invoked on a case-by-case basis whenever the Corps determines that the potential consequences of the proposal warrant Individual Permit review based on the concerns stated above. This authority may be invoked for projects with cumulative environmental impacts that are more than minimal or if there is a special resource or concern associated with a particular project that is not already covered by the remaining conditions of the PGP and that warrants greater review. Whenever the Corps notifies an applicant that an Individual Permit may be required, authorization under this PGP is void and no work may be conducted until the individual Corps permit is obtained or until the Corps notifies the applicant that further review has demonstrated that the work may proceed under this PGP.

5. Single and Complete Projects. This PGP shall not be used for piecemeal work and shall be applied to single and complete projects. All components of a single project shall be treated together as constituting one single and complete project and/or all planned phases of a multi-phased project (e.g., subdivisions should include all work such as roads, utilities, and lot development) unless the Corps determines that a component has independent utility. (The *Independent Utility* test is used to determine what constitutes a single and complete project in the Corps regulatory program. A project is considered to have independent utility if it would be constructed absent the construction of other projects in the project area. Portions of a multi-phase project that depend upon other phases of the project do not have independent utility. Phases of a project that would be constructed even if the other phases were not built can be considered as separate single and complete projects with independent utility.) For linear projects, such as power lines or pipelines with multiple

crossings, the "single and complete project" (i.e., single and complete crossing) will apply to each crossing of a separate water of the U.S. (i.e., single waterbody) at that location; except that for linear projects crossing a single waterbody several times at separate and distant locations, each crossing is considered a single and complete project, and may be reviewed for Category 1 eligibility. (However, individual channels in a braided stream or river, or individual arms of a large, irregularly-shaped wetland or lake, etc., are not separate waterbodies.) If any crossing requires a Category 2 activity, then the entire linear project shall be reviewed as one project under Category 2. Also, this PGP shall not be used for any activity that is part of an overall project for which an Individual Permit is required, unless the Corps determines the activity has independent utility.

6. Permit On-Site. For Category 2 projects, the permittee shall ensure that a copy of this PGP and the accompanying authorization letter are at the work site (and the project office) authorized by this PGP whenever work is being performed, and that all personnel with operation control of the site ensure that all appropriate personnel performing work are fully aware of its terms and conditions. The entire permit authorization shall be made a part of any and all contracts and sub-contracts for work that affects areas of Corps jurisdiction at the site of the work authorized by this PGP. This shall be achieved by including the entire permit authorization in the specifications for work. The term "entire permit authorization" means this PGP and the authorization letter (including its drawings, plans, appendices and other attachments) and also includes permit modifications. If the authorization letter is issued after the construction specifications, but before receipt of bids or quotes, the entire permit authorization shall be included as an addendum to the specifications. If the authorization letter is issued after receipt of bids or quotes, the entire permit authorization shall be included in the contract or sub-contract as a change order. Although the permittee may assign various aspects of the work to different contractors or sub-contractors, all contractors and sub-contractors shall be obligated by contract to comply with all environmental protection provisions contained within the entire PGP authorization, and no contract or sub-contract shall require or allow unauthorized work in areas of Corps jurisdiction.

National Concerns

7. St. John/St. Croix Rivers. This covers work within the Saint John and Saint Croix River basins that requires approval of the International Joint Commission. This includes any temporary or permanent use, obstruction or diversion of international boundary waters which could affect the natural flow or levels of waters on the Canadian side of the line, as well as any construction or maintenance of remedial works, protective works, dams, or other obstructions in waters downstream from boundary waters when the activity could raise the natural level of water on the Canadian side of the boundary.

8. Historic Properties. Any activity authorized by this PGP shall comply with Section 106 of the National Historic Preservation Act. Information on the location and existence of historic resources can be obtained from the Maine Historic Preservation Commission, the National Register of Historic Places, and the Penobscot, Passamaquoddy, Micmac, and Maliseet Tribal Historic Preservation Officers. See Page 17 for historic properties contacts. If the permittee, either prior to construction or during construction of the work authorized herein, encounters a previously unidentified archaeological or other cultural resource, within the area subject to Department of the Army jurisdiction, that might be eligible for listing in the National Register of Historic Places, he/she shall stop work and immediately notify the District Engineer and the Maine Historic Preservation Commission and/or applicable Tribe(s).

9. National Lands. Activities authorized by this PGP shall not impinge upon the value of any National Wildlife Refuge, National Forest, National Marine Sanctuary, National Park or any other area administered by the National Park Service.

10. Endangered Species. No activity may be authorized under this PGP which:

- is likely to adversely affect a threatened or endangered species, a proposed species, designated critical habitat, or proposed critical habitat as identified under the Federal ESA,
- would result in a "take" of any threatened or endangered species of fish or wildlife, or
- would result in any other violation of Section 9 of the ESA protecting threatened or endangered species of plants.

Applicants shall notify the Corps if any listed species or critical habitat, or proposed species or critical habitat, is in the vicinity of the project and shall not begin work until notified by the District Engineer (DE) that the requirements of the ESA have been satisfied and that the activity is authorized. Information on the location of threatened and endangered species and their critical habitat can be obtained from the U.S. FWS and NMFS (see Page 16 for addresses).

11. Essential Fish Habitat. As part of the PGP screening process, the Corps will coordinate with NMFS in accordance with the 1996 amendments to the Magnuson-Stevens Fishery Conservation and Management Act to protect and conserve the habitat of marine, estuarine and anadromous finfish, mollusks, and crustaceans. This habitat is termed "Essential Fish Habitat (EFH)", and is broadly defined to include "those waters and substrate necessary to fish for spawning, breeding, feeding, or growth to maturity." Applicants may be required to describe and identify potential impacts to EFH. Conservation recommendations made by NMFS will normally be included as a permit requirement by the Corps. For additional information, see the EFH regulations at 50 CFR Part 600 (http://www.nmfs.noaa.gov). Additional information on the location of EFH can be obtained from NMFS (see Page 16 for contact information).

Any work in any aquatic habitat in the following rivers and streams, including all tributaries to the extent that they are currently or were historically accessible for salmon migration, shall not be authorized under Category 1 of the PGP and must be screened for potential impacts to EFH.

Androscoggin River	Hobart Stream	Passagassawaukeag River	Saco River
Aroostook River	Kennebec River	Patten Stream	Sheepscot River
Boyden River	Machias River	Penobscot River	St. Croix River
Dennys River	Narraguagus River	Pleasant River	Tunk Stream
Ducktrap River	Orland River	Presumpscot River	Union River
East Machias River			

12. Wild and Scenic Rivers. Any activity that occurs in a component of, or within 0.25 mile up or downstream of, the main stem or tributaries of a river segment of the National Wild and Scenic River System, must be reviewed by the Corps under the procedures of Category 2 of this PGP regardless of size of impact. This condition applies to both designated Wild and Scenic Rivers and rivers designated by Congress as study rivers for possible inclusion while such rivers are in an official study status. The Corps will consult with the National Park Service (NPS) with regard to potential impacts of the proposed work on the resource values of the Wild and Scenic River. The culmination of this coordination will be a determination by the NPS and the Corps that the work: (1) may proceed as proposed; (2) may proceed with recommended conditions; or (3) could pose a direct and adverse effect on the resource values of the river and an individual permit is required. If

preapplication consultation between the applicant and the NPS has occurred whereby NPS has made a determination that the proposed project is appropriate for authorization under this PGP (with respect to Wild and Scenic River issues), this determination should be furnished to the Corps with submission of the application. (See NPS address on Page 16.) National Wild and Scenic Rivers System segments for Maine as of September 2005 include: Allagash River beginning at Telos Dam continuing to Allagash checkpoint at Eliza Hole Rapids, approximately 3 miles upstream of the confluence with the St. John River (length = 92 miles).

13. Federal Navigation Project. Any structure or work that extends closer to the horizontal limits of any Corps Federal Navigation Project (See Appendix B) than a distance of three times the project's authorized depth shall be subject to removal at the owner's expense prior to any future Corps dredging or the performance of periodic hydrographic surveys.

14. Navigation. (a) There shall be no unreasonable interference with navigation by the existence or use of the activity authorized herein and no attempt shall be made by the permittee to prevent the full and free use by the public of all navigable waters at or adjacent to the activity authorized herein. (b) The permittee understands and agrees that, if future operations by the United States require the removal, relocation, or other alteration, of the structure or work herein authorized, or if, in the opinion of the Secretary of the Army or his authorized representative, said structure or work shall cause unreasonable obstruction to the free navigation of the navigable waters, the permittee will be required, upon due notice from the Corps of Engineers, to remove, relocate, or alter the structural work or obstructions caused thereby, without expense to the United States. No claim shall be made against the United States on account of any such removal or alteration.

15. Federal Liability. In issuing this permit, the Federal Government does not assume any liability for the following: (a) damages to the permitted project or uses thereof as a result of other permitted or unpermitted activities or from natural causes; (b) damages to the permitted project or uses thereof as a result of current or future activities undertaken by or on behalf of the United States (U.S.) in the public interest; (c) damages to persons, property, or to other permitted or unpermitted activities or structures caused by the activity authorized by this permit; (d) design or construction deficiencies associated with the permitted work; (e) damage claims associated with any future modification, suspension, or revocation of this permit.

Minimization of Environmental Impacts

16. Minimization. Discharges of dredged or fill material into waters of the United States, including wetlands, shall be avoided and minimized to the maximum extent practicable. Permittees may only fill those jurisdictional wetlands that the Corps authorizes to be filled and impact those wetlands that the Corps authorizes as secondary impacts. For coastal structures such as piers and docks, the height above the marsh at all points should be equal to or exceed the width of the deck. The height shall be measured from the marsh substrate to the bottom of the longitudinal support beam. This will help ensure sunlight reaches the area beneath the structure.

17. Heavy Equipment in Wetlands. Heavy equipment, other than fixed equipment (drill rigs, fixed cranes, etc.), working within wetlands shall not be stored, maintained or repaired in wetlands unless it is less environmentally damaging otherwise, and as much as possible shall not be operated there. Where construction requires heavy equipment operation in wetlands, the equipment shall

either have low ground pressure (<3 psi), or shall not be located directly on wetland soils and vegetation; it shall be placed on swamp or timber mats that are adequate to support the equipment in such a way as to minimize disturbance of wetland soil and vegetation. (See General Condition 18 below.) Other support structures that are less impacting and are capable of safely supporting equipment may be used with written Corps authorization. Similarly, not using mats during frozen, dry or other conditions may be allowed with written Corps authorization. An adequate supply of spill containment equipment shall be maintained on site.

NOTE: "Swamp mats" is a generic term used to describe structures that distribute equipment weight to prevent wetland damage while facilitating passage and providing work platforms for workers and equipment. They are comprised of sheets or mats made from a variety of materials in various sizes, and they include large timbers bolted or cabled together (timber mats). Corduroy roads, which are not considered to be swamp mats, are cut trees and/or saplings with the crowns and branches removed, and the trunks lined up next to one another.

18. Temporary Fill. Fill placed into waters of the U.S. (including wetlands) totaling greater than or equal to 4,300 SF (15,000 SF if a DEP Tier One Permit is issued) in total area (i.e., the sum of permanent and temporary fill areas) exceeds the Category 1 threshold and may not be discharged without written authorization from the Corps. When temporary fill is used (e.g., access roads, swamp mats, cofferdams), it shall be stabilized and maintained during construction in such a way as to prevent soil eroding into portions of waters of the U.S. where it is not authorized. Swamp or timber mats (see Gen.Cond. 17 above) are considered as temporary fill when they are removed immediately upon work completion. The area must be restored in accordance with Gen.Cond. 19.

- Unconfined temporary fill authorized for discharge into flowing water (rivers and streams) shall consist only of clean washed stone.
- Temporary fill authorized for discharge into wetlands shall be placed on geotextile fabric laid on the pre-construction wetland grade. (Swamp and timber mats are excluded from this requirement.)
- Temporary fill shall be removed as soon as it is no longer needed, and it shall be disposed of at an upland site and suitably contained to prevent subsequent erosion into waters of the U.S.
- Waters of the U.S. where temporary fill was discharged shall be restored (see Gen.Cond. 19).
- No temporary work shall drain a water of the U.S. by providing a conduit for water on or below the surface.

19. Restoration.

- Upon completion of construction, all disturbed wetland areas (the disturbance of these areas must be authorized) shall be stabilized with a wetland seed mix containing only plant species native to New England.
- The <u>introduction</u> or <u>spread</u> of invasive plant species in disturbed areas shall be controlled.
- In areas of authorized temporary disturbance, if trees are cut they shall be cut at ground level and not uprooted in order to prevent disruption to the wetland soil structure and to allow stump sprouts to revegetate the work area, unless otherwise authorized.
- Wetland areas where permanent disturbance is not authorized shall be restored to their original condition and elevation, which under no circumstances shall be higher than the pre-construction elevation. Original condition means careful protection and/or removal of existing soil and vegetation, and replacement back to the original location such that the original soil layering and vegetation schemes are approximately the same, unless otherwise authorized.

20. Coastal Bank Stabilization. Projects involving construction or reconstruction/maintenance of bank stabilization structures within Corps jurisdiction should be designed to minimize environmental effects, effects to neighboring properties, scour, etc. to the maximum extent practicable. For example, vertical bulkheads should only be used in situations where reflected wave energy can be tolerated. This generally eliminates bodies of water where the reflected wave energy may interfere with or impact on harbors, marinas, or other developed shore areas. A revetment is sloped and is typically employed to absorb the direct impact of waves more effectively than a vertical seawall. It typically has a less adverse effect on the beach in front of it, abutting properties and wildlife. For more information, see the Corps Coastal Engineering Manual (supersedes the Shore Protection Manual), located at http://chl.erdc.usace.army.mil. Select "Products/ Services," "Publications." Part 5, Chapter 7-8, a(2)c is particularly relevant.

21. Sedimentation and Erosion Control. Adequate sedimentation and erosion control management measures, practices and devices, such as phased construction, vegetated filter strips, geotextile silt fences, hay bales or other devices, shall be installed and properly maintained to reduce erosion and retain sediment on-site during and after construction. They shall be capable of preventing erosion, of collecting sediment, suspended and floating materials, and of filtering fine sediment. These devices must be removed in a timely manner upon completion of work, but not until the disturbed areas have been stabilized. The sediment collected by these devices shall be removed and placed at an upland location in a manner that will prevent its later erosion into a waterway or wetland. All exposed soil and other fills shall be permanently stabilized at the earliest practicable date.

22. Waterway Crossings.
(a) All temporary and permanent crossings of waterbodies (waterways and wetlands) shall be suitably culverted, bridged, or otherwise designed to withstand and to prevent the restriction of high flows, to maintain existing low flows, and to not obstruct the movement of aquatic life indigenous to the waterbody beyond the actual duration of construction. (NOTE: Areas of fill and/or cofferdams must be included in total waterway/wetlands impacts to determine applicability of this PGP).
(b) Aquatic Life Movements. No activity may substantially disrupt the necessary life-cycle movements of those species of aquatic life indigenous to the waterbody, including those species that normally migrate through the area, unless the activity's primary purpose is to impound water. For new permanent crossings, open bottom arches, bridge spans or embedded culverts are generally preferred over traditional culverts and should be installed when practicable. Coordination with the Corps is recommended for Category 1 projects when site constraints (e.g., placing footings) may render open bottom arches, bridge spans or embedded culverts impractical. In these cases, well-designed culverts may actually perform better. Culverts shall be installed with their inverts embedded below existing streambed grade to avoid "hanging" and associated impediments to fish passage. The "Design of Road Culverts for Fish Passage" provides design guidance and is available at www.nae.usace.army.mil, "Regulatory/Permitting," "Other."
(c) Culverts at waterbody crossings shall be installed in such a manner as to preserve hydraulic connectivity, at its present level, between the wetlands on either side of the road. The permittee shall take necessary measures to correct wetland damage due to lack of hydraulic connectivity.
(d) Culverts and bridges shall span the waterway a minimum of 1.2 times the bankfull width in probable fish bearing waterways to qualify as a Category 1 non-reporting activity. See "Design of Road Culverts for Fish Passage," referenced in (b) above, for information on bankfull width.

(e) Projects using slip lining (retrofitting an existing culvert by inserting a smaller diameter pipe), plastic pipes, and High Density Polyethylene Pipes (HDPP) are not allowed as non-reporting Category 1 activities, either as new work or maintenance activities.
(f) Waterbody crossings shall be culverted to at least municipal or State standards. The Maine DEP's stream crossing standards are at 06-096, Chapter 305: Permit by Rule, Section 10. Stream crossings (bridges, culverts and fords).
(g) Waterway crossings proposed by the Maine Dept. of Transportation should conform to the MDOT Fish Passage Policy and Design Guides.
(h) Construction equipment shall not cross streams without the use of temporary bridges, culverts, or cofferdams.
(i) For projects that otherwise meet the terms of Category 1, in-stream construction work shall be conducted during the low flow period July 15 - October 1 in any year. Projects that are not to be conducted during that time period are ineligible for Category 1 and shall be screened pursuant to Category 2, regardless of the waterway and wetland fill and/or impact area.

23. Discharge of Pollutants. All activities involving any discharge of pollutants into waters of the U.S. authorized under this PGP shall be consistent with applicable water quality standards, effluent limitations, standards of performance, prohibitions, and pretreatment standards and management practices established pursuant to the CWA (33 USC 1251) and applicable State and local laws. If applicable water quality standards, limitations, etc., are revised or modified during the term of this PGP, the authorized work shall be modified to conform with these standards within six months of the effective date of such revision or modification, or within a longer period of time deemed reasonable by the District Engineer in consultation with the Regional Administrator of the EPA. Applicants may presume that State water quality standards are met with the issuance of a LURC or DEP NRPA permit.

24. Spawning Areas. Discharges of dredged or fill material, and/or suspended sediment producing activities in fish and shellfish spawning or nursery areas and amphibian and waterfowl breeding areas during spawning or breeding seasons shall be avoided. During all times of year, impacts to these areas shall be avoided or minimized to the maximum extent practicable.

25. Storage of Seasonal Structures. Coastal structures, such as pier sections and floats, that are removed from the waterway for a portion of the year (often referred to as seasonal structures) shall be stored in an upland location located above mean high water (MHW) and not in tidal wetlands. These seasonal structures may be stored on the fixed, pile-supported portion of the structure that is seaward of MHW. This is intended to prevent structures from being stored on the marsh substrate and the substrate seaward of MHW. Seasonal storage of structures in navigable waters, e.g., in a protected cove on a mooring, requires Corps and local harbormaster approval.

26. Environmental Functions and Values. The permittee shall make every reasonable effort to carry out the construction or operation of the work authorized herein in a manner so as to maintain as much as is practicable, and minimize any adverse impacts on existing fish, wildlife, and natural environmental functions and values.

27. Protection of Vernal Pools. Impacts to uplands in proximity (within 500 feet) to the vernal pools referenced in Appendix A - Definitions of Categories, shall be minimized to the maximum extent possible.

Procedural Conditions

28. Cranberry Development Projects. For cranberry development projects authorized under the PGP, the following conditions apply:

- If a cranberry bog is abandoned for any reason, the area must be allowed to revert to natural wetlands unless an Individual Permit is obtained from the Corps allowing the discharge of fill for an alternate use.
- No stream diversion shall be allowed under this permit.
- No impoundment of perennial streams shall be allowed under this permit.
- The project shall be designed and constructed to not cause flood damage on adjacent properties.

29. Inspections. The permittee shall allow the District Engineer (DE) or his authorized representative(s) to make periodic inspections at any time deemed necessary in order to ensure that the work is being performed in accordance with the terms and conditions of this permit. The DE may also require post-construction engineering drawings for completed work and post-dredging survey drawings for any dredging work.

30. Work Start Notification Form and Compliance Certification. Every permittee who receives a written Category 1 or 2 PGP authorization from the Corps must submit a 1) Work Start Notification Form (WSNF) two weeks before work commencement, and 2) signed Compliance Certification Form within one month following the completion of the authorized work and any required mitigation (but not mitigation monitoring, which requires separate submittals). The Corps will forward the blank WSNF and Compliance Certification Form with the authorization letter. The Compliance Certification Form will include: (a) a statement that the authorized work was done in accordance with the Corps authorization, including any general or specific conditions; (b) a statement that any required mitigation was completed in accordance with the permit conditions; and (c) the signature of the permittee certifying the completion of the work and mitigation.

31. Maintenance. The permittee shall maintain the work or structures authorized herein in good condition and in conformance with the terms and conditions of this permit. This does not include maintenance of dredging projects. Maintenance dredging is subject to the review thresholds in Appendix A and/or any conditions included in a written Corps authorization. Maintenance dredging includes only those areas and depths previously authorized and dredged. Some maintenance activities may not be subject to regulation under Section 404 in accordance with 33 CFR 323.4(a)(2).

32. Property Rights. This permit does not convey any property rights, either in real estate or material, or any exclusive privileges, nor does it authorize any injury to property or invasion of rights or any infringement of Federal, State, or local laws or regulations. If property associated with work authorized by the PGP is sold, the PGP authorization is automatically transferred to the new property owner. The new property owner should provide this information to the Corps in writing. No acknowledgement from the Corps is necessary.

33. Modification, Suspension, and Revocation. This permit may be either modified, suspended, or revoked, in whole or in part, pursuant to the policies and procedures of 33 CFR 325.7. Any such action shall not be the basis for any claim for damages against the United States.

34. Restoration. The permittee, upon receipt of a notice of revocation of authorization under this permit, shall restore the wetland or waterway to its former condition without expense to the United States and as directed by the Secretary of the Army or his authorized representative. If the permittee fails to comply with such a directive, the Secretary or his designee may restore the wetland or waterway to its former condition, by contract or otherwise, and recover the cost from the permittee.

35. Special Conditions. The Corps, independently or at the request of the Federal resource agencies, may impose other special conditions on a project authorized pursuant to this general permit that are determined necessary to minimize adverse environmental effects or based on any other factor of the public interest. Failure to comply with all conditions of the authorization, including special conditions, will constitute a permit violation and may subject the permittee to criminal, civil, or administrative penalties or restoration.

36. False or Incomplete Information. If the Corps makes a determination regarding the eligibility of a project under this permit and subsequently discovers that it has relied on false, incomplete, or inaccurate information provided by the permittee, the permit shall not be valid and the government may institute appropriate legal proceedings.

37. Abandonment. If the permittee decides to abandon the activity authorized under this general permit, unless such abandonment is merely the transfer of property to a third party, he/she must restore the area to the satisfaction of the District Engineer.

Duration of Authorization/Grandfathering:

38. Duration of Authorization. This PGP expires five years from the effective date listed at the top of Page 1. Activities authorized under Category 1 of this PGP that have commenced (i.e., are under construction) or are under contract to commence in reliance upon this PGP's authorization will remain authorized provided the activity is completed within 12 months of the PGP's expiration date. Activities authorized under Category 2 of this PGP will remain authorized in accordance with the project-specific date that the Corps provides to the permittee in the PGP authorization letter, unless:
(a) The PGP is either modified or revoked, or
(b) Discretionary authority has been exercised on a case-by-case basis to modify, suspend, or revoke the authorization in accordance with 33 CFR 325.2 (e)(2).

39. Previously Authorized Activities.
(a) Activities completed under the authorizations of past PGPs that were in effect at the time the activity was completed will continue to be authorized by those PGPs.
(b) Completed projects that have received written verification or approval from the Corps, based on applications made to the Corps prior to issuance of this PGP or the previous nationwide permits, regional general permits, or letters of permission shall remain authorized as specified in each authorization.
(c) Activities authorized pursuant to 33 CFR Part 330.3 ("Activities occurring before certain dates") are not affected by this PGP.

VI. CONTACTS FOR MAINE PROGRAMMATIC GENERAL PERMIT:

1. FEDERAL

U.S. Army Corps of Engineers
Maine Project Office
675 Western Avenue #3
Manchester, Maine 04351
(207) 623-8367
(207) 623-8206 (fax)

Federal Endangered Species
U.S. Fish and Wildlife Service
Maine Field Office
1168 Main Street
Old Town, Maine 04468
(207) 827-5938
207-827-6099 (fax)

Federal Endangered Species & Essential Fish Habitat
National Marine Fisheries Service
One Blackburn Drive
Gloucester, Massachusetts 01939
(978) 281-9102
(978) 281-9301 (fax)

Wild and Scenic Rivers
National Park Service
North Atlantic Region
15 State Street
Boston, Massachusetts 02109
(617) 223-5203

Bridge Permits
Commander (obr)
First Coast Guard District
One South Street - Battery Bldg
New York, New York 10004
(212) 668-7021

2. STATE OF MAINE

Maine Department of Environmental Protection
(For State Permits & Water Quality Certifications)
Division of Land Resource Regulation
Bureau of Land and Water Quality
17 State House Station
Augusta, Maine 04333
(207) 287-2111

Southern Maine Regional Office
312 Canco Road
Portland, Maine 04103
(201) 822-6300

Eastern Maine Regional Office
106 Hogan Road
Bangor, Maine 04401
(207) 941-4570

Northern Maine Regional Office
1235 Central Drive - Skyway Park
Presque Isle, Maine 04769
(207) 764-0477

Maine Land Use Regulation Commission (LURC)
[call (800) 452-8711 for appropriate LURC office]
22 State House Station
Augusta, ME 04333-0022
(207) 287-2631
(207) 287-7439 (fax)

45 Radar Road
Ashland, ME 04732-3600
(207) 435-7963
(207) 435-7184 (fax)

Lakeview Drive
P.O. Box 1107
Greenville, ME 04441
(207) 695-2466
(207) 695-2380 (fax)

(For CZM Determinations)
State Planning Office
Coastal Program
184 State Street
State House Station 38
Augusta, Maine 04333
(207) 287-1009

(For Submerged Lands Leases)
Maine Department of Conservation
Bureau of Parks and Lands
22 State House Station
Augusta, Maine 04333
(207) 287-3061

191 Main Street
East Millinocket, ME 04430
(207) 746-2244
(207) 746-2243

(For Aquaculture Leases)
Maine Department of Marine Resources
P.O. Box 8
West Boothbay Harbor, Maine 04575
(207) 633-9500

3. HISTORIC PROPERTIES

Maine Historic Preservation Commission
State House Station 65
Augusta, Maine 04333-0065
(207) 287-2132
(207) 287-2335 (fax)

Aroostook Band of Micmacs
Attn: Mr. Williams Phillips, Chief
7 Northern Road
Presque Isle, Maine 04769
(207) 764-1972
(207) 764-7667 (fax)

Houlton Band of Maliseet Indians
Attn: Tribal Chief
88 Bell Road
Littleton, Maine 04730
(207) 532-4273, x215
(207) 532-2660 (fax)

Passamaquoddy Tribe of Indians
Pleasant Point Reservation
Attn: Tribal Council
P.O. Box 343
Perry, Maine 04667
(207) 853-2600
(207) 853-6039 (fax)

Passamaquoddy Tribe of Indians
Indian Township Reservation
Attn: Donald Soctomah, THPO
P.O. Box 301
Princeton, Maine 04668
(207) 796-2301
(207) 796-5256 (fax)

Penobscot Indian Nation
Indian Island Reservation
Attn: Ms. Bonnie Newsom, THPO
12 Wabanaki Way
Indian Island, Maine 04468
(207) 817-7471
(207) 817-7450 (fax)

4. ORGANIZATIONAL WEBSITES:

Army Corps of Engineers	www.nae.usace.army.mil (click "Regulatory/Permitting")
Corps of Engineers Headquarters	www.usace.army.mil (click "Services for the Public")
Environmental Protection Agency	www.epa.gov/owow/wetlands/
National Marine Fisheries Service	www.nmfs.noaa.gov
U.S. Fish and Wildlife Service	www.fws.gov
National Park Service	www.nps.gov/rivers/index.html
State of Maine	www.maine.gov
State of Maine -Aquaculture Guidelines	www.maine.gov/dmr/aquaculture/index.htm

for Christine J. Grey 10-11-05
District Engineer Date

APPENDIX A: DEFINITION OF CATEGORIES

A. INLAND WATERS AND WETLANDS	**Inland Waters and Wetlands:** Waters that are regulated under Section 404 of the Clean Water Act, including rivers, streams, lakes, ponds and wetlands, and excluding Section 10 Navigable Waters of the U.S. The jurisdictional limits are the ordinary high water (OHW) mark in the absence of adjacent wetlands, beyond the OHW mark to the limit of adjacent wetlands when adjacent wetlands are present, and the wetland limit when only wetlands are present. For the purposes of this PGP, fill placed in the area between the mean high water (MHW) and the high tide line (HTL), and in the bordering and contiguous wetlands[1] to tidal waters are reviewed in the Navigable Waters section. (See II. Navigable Waters on the next page.)		
	CATEGORY 1	**CATEGORY 2**	**INDIVIDUAL PERMIT**
(a) NEW FILL/ EXCAVATION DISCHARGES	<4,300 SF inland waterway and/or wetland fill and associated secondary impacts (e.g., areas drained, flooded, cleared or excavated). Fill area includes all temporary and permanent fill, and excavation discharges (except for incidental fallback). Swamp mats are considered as fill. [See General Condition (GC) 18.] Provided: • In-stream (e.g., rivers, streams, brooks, etc.) work limited to Jul 15 - Oct 1 • In-stream work of up to 4,300 SF of fill below OHW in waterways not designated as EFH for Atlantic salmon (see GC 11, Page 9) and performed in accordance with Maine Permit By Rule standards or a LURC permit. • Waterway crossings shall comply with GC 22. • Projects covered by a DEP Tier One permit with no cumulative impacts >15,000 SF in inland wetlands from previous permits, unauthorized work, and/or other state permits. • Subdivision fill complies with GC 5, Single and Complete Projects (see Page 7). This category excludes: • Dams, dikes or activities involving water diversions.[2] • Non-State approved sediment releases/sluices from dams. • Open trench excavation in flowing waters (see GC 22, Page 12).	4,300 SF to <3 acres inland waterway and/or wetland fill and associated secondary impacts (e.g., areas drained, flooded, cleared or excavated). Fill area includes all temporary and permanent fill, and excavation discharges (except for incidental fallback). Swamp mats filling any area ≥4,300 SF are reviewed in Category 2. (See GC 18, Page 11.) Includes: In-stream work, including crossings (other than spanned crossing as described in Category 1) with any discharge of fill below ordinary high water in perennial waterways designated as EFH for Atlantic salmon. Time of year restrictions determined case-by-case. Projects with proactive restoration as a primary purpose with impacts of any area ≥4,300 SF. The Corps, in consultation with State & Federal agencies, must determine that net adverse effects are not more than minimal. Specific activities with impacts of any area ≥4,300 SF required to affect the containment, stabilization, or removal of hazardous or toxic waste materials that are performed, ordered, or sponsored by a government agency with established legal or regulatory authority. Wetlands must be restored in place.	≥3 acres inland waterway and/or wetland fill and secondary impacts (e.g., areas drained, flooded, cleared or excavated). Fill area includes all temporary and permanent fill, and excavation discharges (except for incidental fallback).[5] EIS required by the Corps. In-stream work exceeding Category 2 limits.

	CATEGORY 1	CATEGORY 2	INDIVIDUAL PERMIT
	• Work in waters designated as EFH for Atlantic salmon (see GC 11, Page 9), unless the waterway is crossed with a span and footprints of the span abutments are outside ordinary high water with no more than 4,300 SF of associated wetland impact. • Work in Special Inland Waters or Wetlands[3] (vernal pools). • Work in special aquatic sites (SAS)[4] other than wetlands. • Work within ¼ mile of a Wild and Scenic River (see GC 12, Page 9). • Work on National Lands (see GC 9, Pg. 9). • Work affecting threatened or endangered species (see GC 10, Page 9) or EFH salmon migration (see GC 11, Page 9).		
(b) BANK STABILIZATION PROJECTS	Inland bank stabilization <100 FT long and <1 CY of fill per linear foot below OHW. Provided: • In-stream work limited to Jul 15 - Oct 1. • No work in special inland waters & wetlands[3] and SAS[4]. • No open trench excavation in flowing waters (see GC 22, Page 12). • No structures angled steeper than 3H:1V allowed. Only rough-faced stone or fiber roll revetments allowed. • No work affects threatened or endangered species (see GC 10, Page 9) or EFH (see GC 11, Page 9).	Inland bank stabilization ≥100 FT long and/or ≥1 CY of fill per linear foot, or any amount with fill in wetlands.	
(c) REPAIR AND MAINTENANCE OF AUTHORIZED FILLS	Repair or maintenance of existing, currently serviceable, authorized fills with no substantial expansion or change in use. *Conditions of the original authorization apply, however minor deviations in fill design allowed.[6]	Replacement of non-serviceable fills, or repair/maintenance of serviceable fill, with expansion <3 acres, or with a change in use.	Replacement of non-serviceable fill, or repair/maintenance of serviceable fill, with expansion ≥1 acre.

II. NAVIGABLE WATERS	**Navigable Waters of the United States**: Waters that are subject to the ebb and flow of the tide and Federally designated navigable rivers (the Penobscot River, Kennebec River, and Lake Umbagog) (Section 10 Rivers and Harbors Act of 1899). The jurisdictional limits are the mean high water (MHW) line in tidal waters and the ordinary high water (OHW) mark in non-tidal portions of the Federally designated navigable rivers. For the purposes of this PGP, fill placed in the area between the mean high water (MHW) and the high tide line (HTL), and in the bordering and contiguous wetlands[1] to tidal waters are also reviewed in this Navigable Waters section.		
	CATEGORY 1	**CATEGORY 2**	**INDIVIDUAL PERMIT**
(a) FILL	Discharges of dredged or fill material incidental to the construction of bridges across navigable waters of the United States, including cofferdams, abutments, foundation seals, piers, and temporary construction and access fills provided the U.S. Coast Guard authorizes such discharges as part of the bridge permit. Causeways and approach fills are not included in this category and require Category 2 or Individual Permit authorization.	<1 acre fill and/or secondary waterway impacts (e.g., areas drained, flooded or cleared). Fill includes temporary and permanent waterway fill. Temporary fill or excavation <1 acre in SAS[4]. Permanent fill or excavation <1,000 SF in SAS[4]. Permanent fill and/or excavation ≥1,000 SF in SAS[5] when associated with a project with proactive restoration as a primary purpose. The Corps, in consultation with Federal & state agencies, must determine that net adverse effects are not more than minimal. Specific activities with impacts of any area required to affect the containment, stabilization, or removal of hazardous or toxic waste materials that are performed, ordered, or sponsored by a government agency with established legal or regulatory authority. Wetlands must be restored in place.	≥1 acre waterway fill and/or secondary waterways or wetland impacts (e.g., areas drained, flooded or cleared). Fill includes temporary and permanent waterway fill. Temporary fill or excavation ≥1 acre in SAS[4]. Permanent fill or excavation ≥1,000 SF in SAS[4] other than as specified in Cat. 2 EIS required by the Corps.
(b) REPAIR AND MAINTENANCE WORK	Repair or maintenance of existing, currently serviceable, authorized structure or fill with no substantial expansion or change in use. *Conditions of the original authorization apply. Must be rebuilt in same footprint, however minor deviations in structure design allowed[6]	Replacement of non-serviceable structures and fills or repair/maintenance of serviceable structures or fills, with fill, replacement or expansion <1 acre, or with a change in use.	Replacement of non-serviceable structures and fills or repair/ maintenance of serviceable structures or fill, with replacement or expansion ≥1 acre.

	CATEGORY 1	CATEGORY 2	INDIVIDUAL PERMIT
(c) DREDGING AND ASSOCIATED DISPOSAL	Maintenance dredging for navigational purposes <1,000 cy with upland disposal. Includes return water from upland contained disposal area. Provided: • Proper siltation controls are used. • Dredging & disposal operation limited to November 1 - January 15. • No impact to special aquatic sites[4]. • No dredging in intertidal areas. • No work affects threatened or endangered species (see GC 10, Page 9) or EFH salmon migration (see GC 11, Page 9).	Maintenance dredging ≥1,000 CY, new dredging <25,000 CY, or projects not meeting Category 1. Includes return water from upland contained disposal areas. Provided: • Disposal includes 1) upland, 2) beach nourishment (above MHW) of any area provided dredging's primary purpose is navigation or sand is from an upland source and Corps, in consultation w/Federal and State agencies, determines the net adverse effects are not more than minimal; and 3) open water & confined aquatic disposal, if Corps, in consultation with Federal and State agencies, finds the material suitable.	Maintenance dredging and/or disposal (any amount) in or affecting a SAS[4]. See II(a) above for dredge disposal in wetlands or waters. New dredging ≥25,000 CY, or any amount in or affecting SAS[4]. Beach nourishment associated with dredging when the primary purpose is not navigation (i.e., aggregate/sand mining) or the material is from an upland source.
(d) MOORINGS	Private, non-commercial, non-rental, single-boat moorings authorized by the local harbormaster. Provided: • Not associated with any boating facility[7] • Not located in a Federal Navigation Project other than a Federal Anchorage. Moorings in Federal Anchorage not associated with a boating facility[7]. • No interference with navigation • Not located in vegetated shallows[8] • Within ¼ mile of the owner's residence or a public access point.[9] Minor relocation of previously authorized moorings and moored floats consistent with Harbormaster recommendations, provided it is also consistent with local regulations, is not located in vegetated shallows, and does not interfere with navigation.	Moorings associated with a boating facility[7]. Moorings that don't meet the terms in Category 1 and don't require an Individual Permit. Moorings located such that they, and/or vessels docked or moored at them, are within the buffer zone of the horizontal limits[10] of a Corps Federal Channel. (See Appendix B.) The buffer zone is equal to three times the authorized depth of that channel.	Moorings within the horizontal limits[10], or with moored vessels that extend, into the horizontal limits of a Federal Navigation Project (See App. B), except those in Federal Anchorages under Category 1. Note: Federal Navigation Projects include both Federal Channels and Federal Anchorages.

	CATEGORY 1	CATEGORY 2	INDIVIDUAL PERMIT
(e) STRUCTURES AND FLOATS	Reconfiguration of existing authorized structures or floats. Provided: • Structures not positioned over vegetated shallows[8] or salt marsh. • Floats supported off substrate at low tide. • No dredging, additional slips or expansion. • No work affects threatened or endangered species (see GC 10, Page 9) or EFH salmon migration (see GC 11, Page 9)..	Private structures or floats, including floatways/skidways, built to access waterway (seasonal and permanent) Expansions to existing boating facilities[7]. Compliance with the following is recommended, but not required: • Pile-supported structures <400 SF, with attached floats totaling ≤200 SF. • Bottom anchored floats ≤200 SF. • Structures are ≤4' wide and have at least a 1:1 height:width ratio[11]. • Floats supported above the substrate during all tides. • Structures & floats not located within 25' of any vegetated shallows[8]. • Moored vessels not positioned over SAS[4]. • No structure located within 25' of the riparian property boundary. • No structure extends across >25% of the waterway width at mean low water. • Not located within the buffer zone of the horizontal limits[10] of a Corps Federal Navigation Project (FNP) (See App. B). The buffer zone is equal to three times the authorized depth of that FNP.	Structures or floats, including floatways/skidways, located such that they and/or vessels docked or moored at them are within the horizontal limits of a Corps Federal Navigation Project (see App. B). Structures and floats associated with a new or previously unauthorized boating facility[7]. Note: Federal Navigation Projects include both Federal Channels and Federal Anchorages.
(f) MISCELLANEOUS	Temporary buoys, markers, floats, etc. for recreational use during specific events, provided they are removed within 30 days after use is discontinued. The placement of aids to navigation and regulatory markers which are approved by and installed in accordance with the requirements of the U.S. Coast Guard. (See 33 CFR part 66, Chapter I, subchapter C)."	Structures or work in or affecting tidal or navigable waters, that are not defined under any of the previous headings listed above. Includes, but is not limited to, utility lines, aerial transmission lines, pipelines, outfalls, boat ramps, floatways/skidways, bridges, tunnels and horizontal directional drilling activities seaward of the MHW line.	EIS required by the Corps. Shellfish/finfish (other than Atlantic salmon), or other aquaculture facilities with more than minimal individual and cumulative impacts to environmental resources or navigation. A 25' eelgrass set back is recommended.

	Oil spill clean-up temporary structures or fill. Fish/wildlife harvesting structures/fill (as defined by 33 CFR 330, App. A-4) Scientific measurement devices and survey activities such as exploratory drilling, surveying and sampling activitities. Does not include oil and gas exploration and fill for roads or construction pads. Shellfish seeding (brushing the flats[12]) projects. Provided: • No work in National Wildlife Refuges. • No work affects threatened or endangered species (see GC 10, Page 9) or EFH salmon migration (see GC 11, Page 9).	Shellfish/finfish (other than Atlantic salmon), or other aquaculture facilities with no more than minimal individual and cumulative impacts to environmental resources or navigation. A 25' eelgrass set back is recommended. Aquaculture guidelines are provided at: www.maine.gov/dmr/aquaculture/index.htm.	Aquaculture guidelines are provided at: www.maine.gov/dmr/aquaculture/index.htm.

[1] **Bordering and Contiguous Wetlands:** A bordering wetland is immediately next to its adjacent waterbody and may lie at, or below, the ordinary highwater mark (MHW in navigable waters) of that waterbody and is directly influenced by its hydrologic regime. Contiguous wetlands extend landward from their adjacent waterbody to a point where a natur or manmade discontinuity exists. Contiguous wetlands include bordering wetlands as well as wetlands that are situated immediately above the ordinary highwater mark and above th normal hydrologic influence of their adjacent waterbody. Note, with respect to the Federally designated navigable rivers, the wetlands bordering and contiguous to the tidally influenced portions of those rivers are reviewed under "II. Navigable Waters."

[2] **Water Diversions:** Water diversions are activities such as bypass pumping or water withdrawals. Temporary flume pipes, culverts or cofferdams where normal flows are maintaine within the stream boundary's confines aren't water diversions. "Normal flows" are defined as no change in flow from pre-project conditions.

[3] **Special Inland Waters and Wetlands:** Vernal Pools - Temporary to permanent bodies of water occurring in shallow depressions that fill during the spring and fall and may dry during the summer. Vernal pools have no permanent or viable populations of predatory fish. Vernal pools provide the primary breeding habitat for wood frogs, spotted salamanders, blue-spotted salamanders, and fairy shrimp, and provide habitat for other wildlife including several endangered and threatened species.

[4] **Special Aquatic Sites:** Includes wetlands and saltmarsh, mudflats, riffles and pools, and vegetated shallows.

[5] **IP Required:** The greater the impacts, the more likely an Individual Permit will be required. The Corps will determine the need for compensatory mitigation on a case-by-case basi

[6] **Maintenance:** Minor deviations in the structure's configuration or filled area, including those due to changes in materials, construction techniques, or current construction codes or safety standards, which are necessary to make repair, rehabilitation, or replacement are permitted, provided the adverse environmental effects resulting from such repair, rehabilitatior or replacement are minimal. No seaward expansion for bulkheads or any other fill activity is considered Category 1 maintenance. Currently serviceable means useable as is or with some maintenance, but not so degraded as to essentially require reconstruction.

[7] **Boating Facilities:** Facilities that provide, rent, or sell mooring space, such as marinas, yacht clubs, boat clubs, boat yards, town facilities, dockominiums, etc.

[8] **Vegetated Shallows:** Subtidal areas that support rooted aquatic vegetation such as eelgrass

[9] **Mooring Location:** Cannot be at a remote location to create a convenient transient anchorage.

[10] **Horizontal Limits:** The outer edge of a Federal Navigation Project (FNP). Contact the Corps of Engineers for information on FNP's.

[11] **Structures:** The height of structures shall at all points be equal to or exceed the width of the deck. For the purpose of this definition, height shall be measured from the marsh substrate to the bottom of the longitudinal support beam.

[12] **Brushing the Flats:** The placement of tree boughs, wooden lath structure, or small-mesh fencing on mudflats to enhance recruitment of soft-shell clams (*Mya arenaria*).
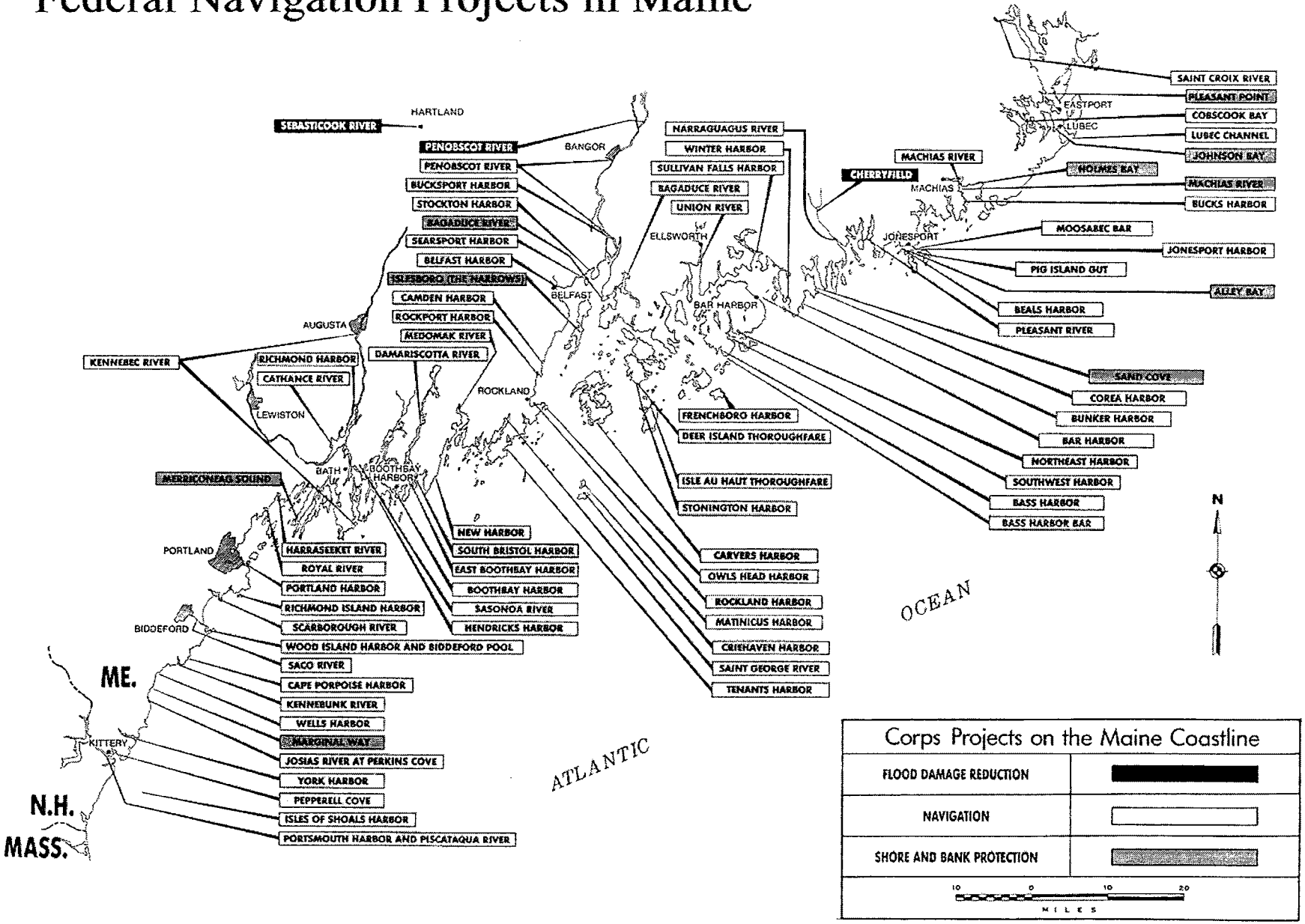
Federal Navigation Projects in Maine