STATE OF MAINE
DEPARTMENT OF TRANSPORTATION
16 STATE HOUSE STATION
AUGUSTA, MAINE
04333-0016

JOHN ELIAS BALDACCI
GOVERNOR

DAVID A. COLE
COMMISSIONER

February 9, 2010
Subject: **Smyrna, Ludlow, New Limerick & Houlton**
Federal Project No: IM-1681(910)S
State Pin No's: 016819.10
Amendment No. 1

Dear Sir/Ms:

This amendment is to notify all contractors that the plans are now available on the website. If you have already purchased a set of plans, they will be FedExed ASAP.

Consider this prior to submitting your bid on February 17, 2010.

Sincerely,

FOR

Scott Bickford
Contracts & Specifications Engineer

PRINTED ON RECYCLED PAPER

THE MAINE DEPARTMENT OF TRANSPORTATION IS AN AFFIRMATIVE ACTION - EQUAL OPPORTUNITY EMPLOYER

STATE OF MAINE
DEPARTMENT OF TRANSPORTATION

IM-1681(910)S

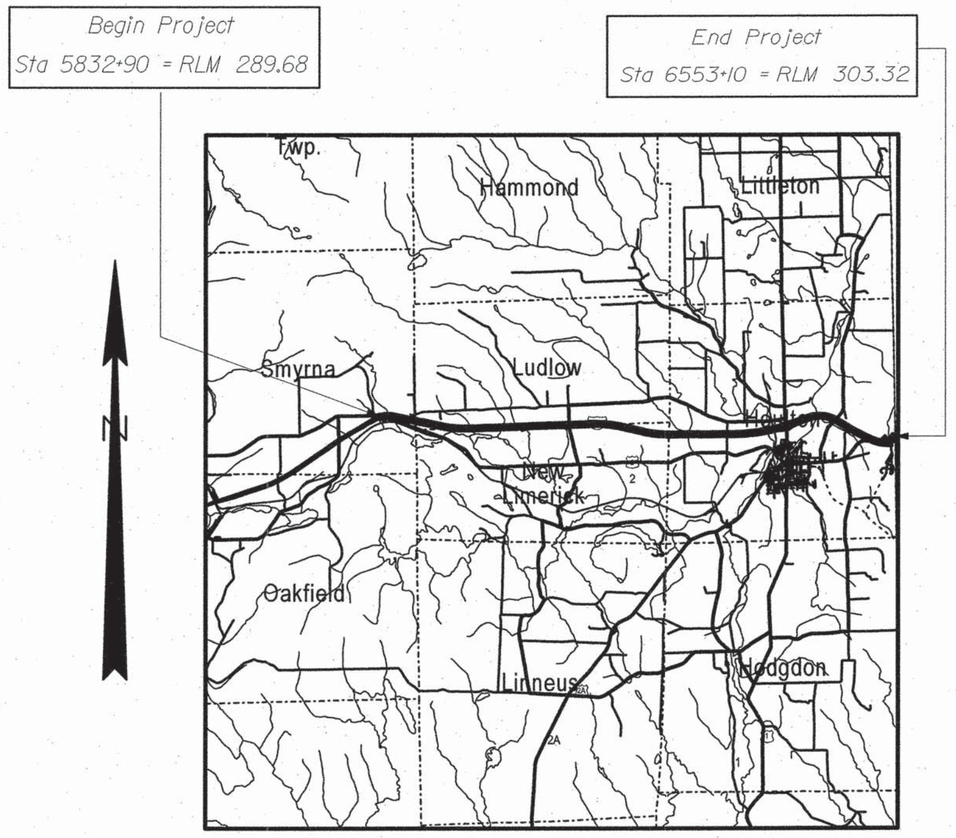

LOCATION MAP

2 0 2 4
Scale in Miles

SMYRNA - HOULTON

AROOSTOOK COUNTY

I-95 NORTHBOUND

IM-1681(910)S

PROJECT LENGTH : 13.640 MILES

HIGHWAY PRESERVATION

TRAFFIC DATA	SEC. 1 EXIT 291-SMYRNA TO EXIT 302-HOULTON	SEC. 2 EXIT 302-HOULTON TO EXIT 305-HOULTON
Current (2010) AADT	2450	950
Future (2022) AADT	2890	1120
DHV - % of AADT	12%	15%
Design Hour Volume	347	168
% Heavy Trucks (AADT)	22%	39%
% Heavy Trucks (DHV)	19%	35%
Directional Distribution (DHV)	100%	100%
18 kip Equivalent P 2.0	314(611)	255(417)
18 kip Equivalent P 2.5	299(588)	243(400)
Design Speed (mph)	65	65
Functional Class:	PRINCIPAL ARTERIAL INTERSTATE	

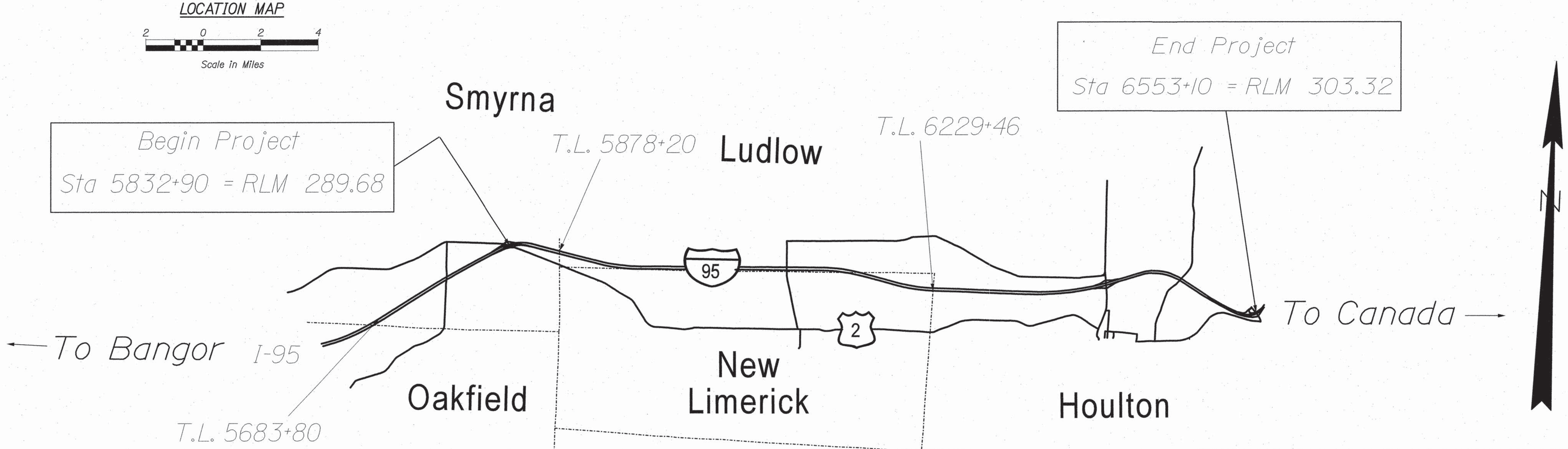

PROGRAM AREA: HIGHWAY RESURFACING INTERSTATE
SCOPE OF WORK: MILL AND FILL PLUS DRAINAGE AND SAFETY IMPROVEMENTS

STATE OF MAINE
DEPARTMENT OF TRANSPORTATION

APPROVED

COMMISSIONER: DATE 2/3/10

CHIEF ENGINEER: DATE 2/3/10

SIGNATURE 10655

P.E. NUMBER 2/1/10

DATE

PROJECT INFORMATION

PROGRAM	HIGHWAY
PROJECT MANAGER	JON BITHER
DESIGNER	
CONSULTANT	
PROJECT RESIDENT	
CONTRACTOR	
PROJECT COMPLETION DATE	

PIN 16819.10

IM-1681(910)S

SMYRNA-HOULTON
I-95 NORTHBOUND

TITLE SHEET

SHEET NUMBER
1
OF 1

Filename: ...\MSTA\001_Title_title2.dgn Division: HIGHWAY Username: raymond.demerchant Date:2/1/2010

ESTIMATED BRIDGE QUANTITIES								
ITEM NO.	DESCRIPTION	QUANTITY	QUANTITY	QUANTITY	QUANTITY	QUANTITY	QUANTITY	UNIT
		Line Road Bridge No. 1389	B Stream Bridge No. 1384	B&A Railroad Bridge Bridge No. 1383	Meduxnekeag River Bridge No. 1381	Foxcroft Road Bridge No. 1380	Total	
202.30	REMOVE EXIST. REINFORCED CONCRETE WEARING SURFACE	--	--	--	0.5	0.5	1	LS
424.3333	LOW MODULUS JOINT SEALER, APPLIED	40	40	--	40	--	120	LF
502.29	STRUCTURAL CONCRETE WEARING SURFACE ON BRIDGE	--	--	--	116	42	158	CY
515.21	PROTECTIVE COATING FOR CONCRETE SURFACES	--	--	--	--	--	1	LS
518.50	REPAIR OF UPWARD FACING SURFACE TO RESTEEL	--	1000	1000	1000	1000	4000	SF
518.51	REPAIR OF UPWARD FACING SURFACE TO BELOW RESTEEL	--	25	50	50	20	145	SF
518.39	REPAIRING GRANITE CURB BEDDING MORTAR	--	10	--	10	10	30	LF
518.60	REPAIR OF VERTICAL SURFACES < 7.9 IN.	10	10	10	10	10	50	SF
518.61	REPAIR OF VERTICAL SURFACES > 7.9 IN.	3	3	3	3	3	15	CY
520.221	EXPANSION DEVICE - COMPRESSION SEAL	1	--	--	--	--	1	LS
520.241	BRIDGE JOINT MODIFICATION TYPE 1	0.5	1	2	0.5	1	5	EA
520.243	BRIDGE JOINT MODIFICATION TYPE 3	--	1	--	1	--	2	EA
520.26	LONGITUDINAL BRIDGE JOINT MODIFICATION	--	5	5	2	5	17	LF
526.34	PERMANENT CONCRETE TRANSITION BARRIER	4	4	4	4	4	20	EA
606.1721	BRIDGE TRANSITION - TYPE 1	4	4	4	4	4	20	EA

Note: Estimated Quantities for each bridge are provided here for reference purposes only.

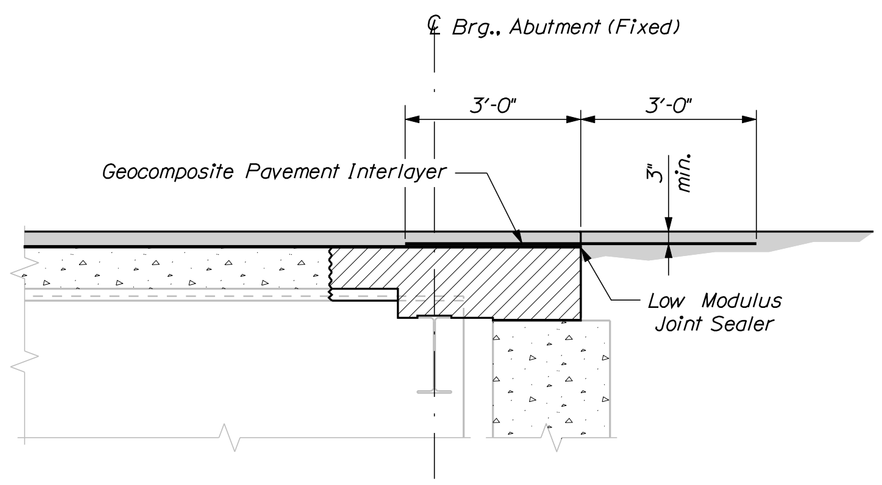

COMPOSITE PAVEMENT INTERLAYER

Typical at all existing or reconstructed slab - over - backwall locations

INDEX OF BRIDGE DRAWINGS

Estimated Bridge Quantities & General Construction Notes 1
I-95 N.B. over Line Road (1389) and B Stream (1384) 2
I-95 N.B. over Bangor Aroostook RR (1383) and Meduxnekeag River (1381) . . 3
I-95 N.B. over Foxcroft Road (1380) 4
Typical Transition Barriers - B Stream & Bangor Aroostook Railroad 5
Typical Transition Barriers - Line Road & Meduxnekeag River 6
Typical Transition Barriers - Foxcroft Road 7
Typical Joint Modification Details 8

MATERIALS

Concrete (Unless noted otherwise) . . . . . Class "A"
Concrete (Curbs & Transition Barriers) . . . . . Class "LP"
Reinforcing Steel . . . . . ASTM A 615/A 615M, Grade 60
Structural Steel: All Material . . . . . ASTM A 36/A 36M
Galvanized Anchor Bolts . . . . . ASTM F1554 Grade 105

BASIC DESIGN STRESSES

Concrete . . . . . f'c = 4,350 psi
Reinforcing Steel . . . . . fy = 60,000 psi
Galvanized Anchor Bolts . . . . . fy = 105,000 psi

MAINTENANCE OF TRAFFIC

The Contractor shall coordinate all maintenance of traffic with the Highway Contractor.

GENERAL CONSTRUCTION NOTES

1. Bidders and Contractors may obtain a copy of the existing bridge plans by faxing a Request for Information to the Bid Contact Person. The plans are reproductions of the original drawings as prepared for the construction of the bridge. It is very unlikely that the plans will show any construction field changes or any alterations which may have been made to the bridge during its life span.

2. All dimensions based on or relating to the existing bridges shall be verified in the field by the Contractor, i.e. existing joint opening, joint length and backwall width.

3. Payment for removing concrete end posts will be considered incidental to related Contract items.

4. Reinforcing Steel Schedules will be the responsibility of the Contractor. Refer to Subsection 503.03 of the Standard Specifications for more information. Payment for all work associated with developing reinforcing steel schedules will be considered incidental to related Contract items.

5. Granite curb salvaged from the project site will be substituted for Terminal Curb Type 2 where available. Payment for reuse of granite curb or for Terminal Curb Type 2 will be considered incidental to Item No. 526.34. Concrete Transition Barrier.

6. Protective Coating for Concrete Surfaces shall be applied to the following areas of new concrete:

All exposed surfaces of concrete curbs.
Fascias down to the drip notch.
All exposed surfaces of Concrete Transition Barriers.
12 inches below the top of backwalls on the back side.

STATE OF MAINE
DEPARTMENT OF TRANSPORTATION

IM-1681(910)S

PIN 16819.10

BRIDGE PLANS

As Noted

PROJ. MGR.	BY	DATE
DESIGN-DETAILED	R. Blunt	D. SHAW
CHECKED-REVIEWED		
DESIGN2-DETAILED2		
DESIGN3-DETAILED3		
REVISIONS 1		
REVISIONS 2		
REVISIONS 3		
REVISIONS 4		
FIELD CHANGES		

SIGNATURE

P.E. NUMBER

DATE

INTERSTATE 95 NORTHBOUND
BRIDGE WEARING SURFACE REHABILITATION
SHERMAN TO HOULTON

ESTIMATED BRIDGE QUANTITIES
& GENERAL CONSTRUCTION NOTES

SHEET NUMBER

1

OF 8

Filename: ...\BRIDGE\MSTA\001_Estimate.dgn Division: BRIDGE Username: david.shaw Date:2/9/2010

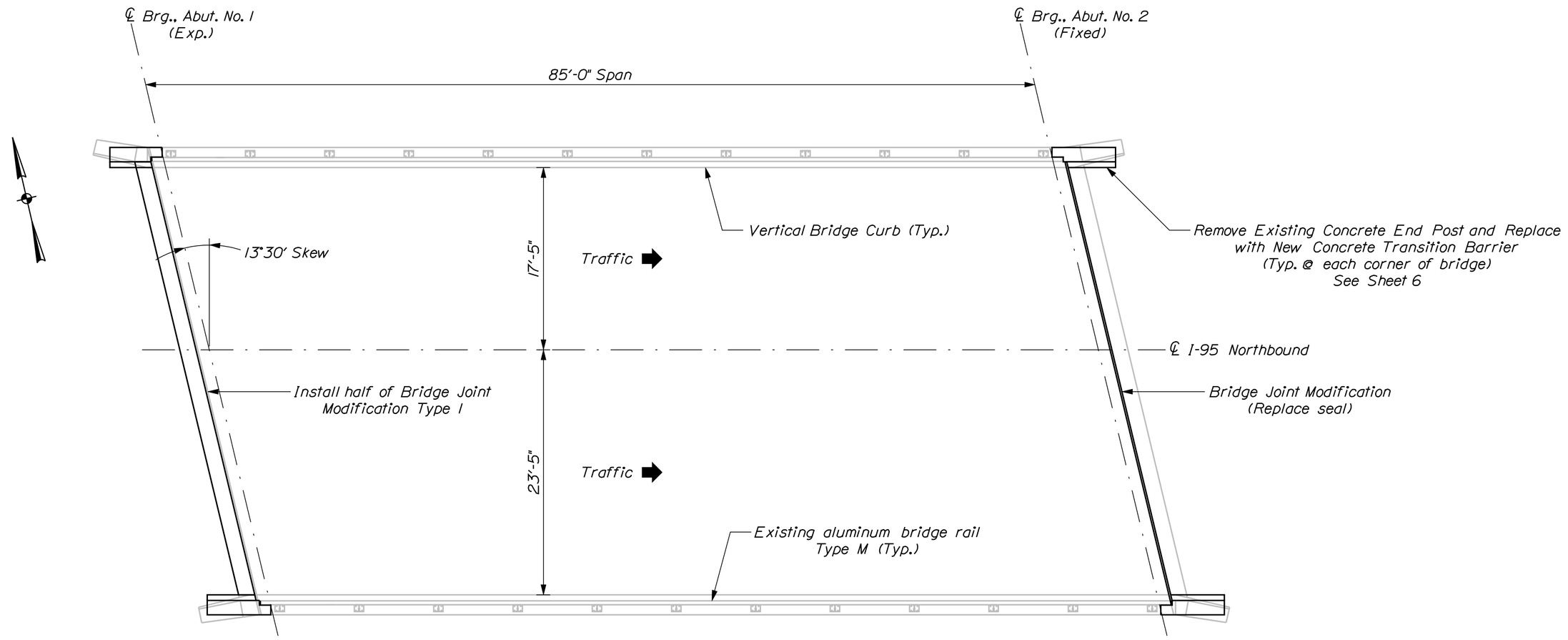

I-95 NORTHBOUND OVER LINE ROAD

Bridge No. 1389
Existing concrete wearing surface to remain

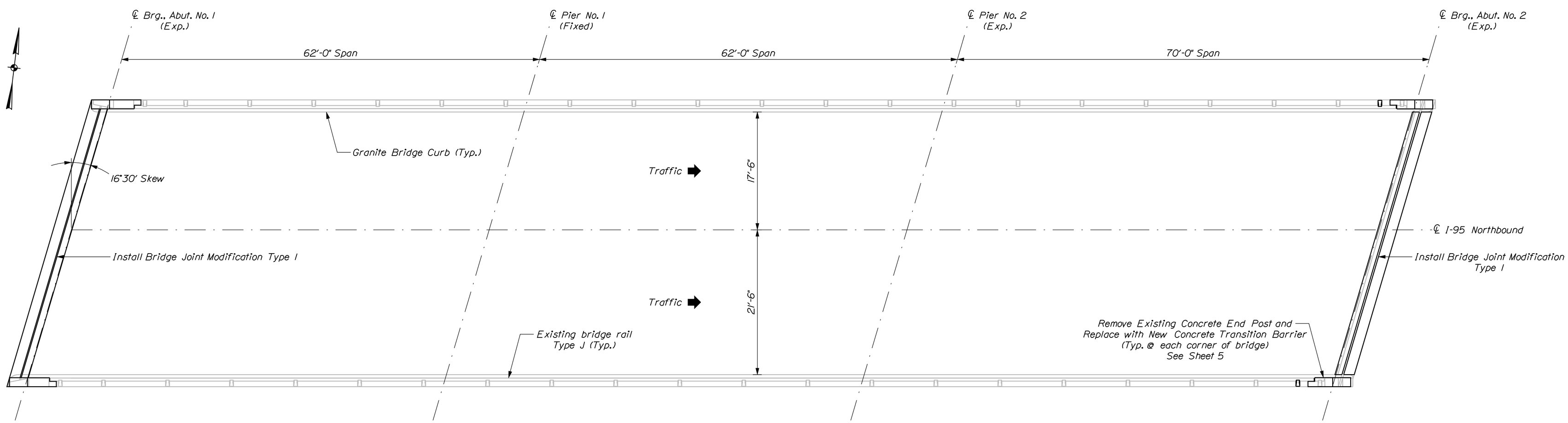

I-95 NORTHBOUND OVER B STREAM

Bridge No. 1384
Remove existing pavement and membrane
Install High Performance Waterproofing Membrane
Place Hot Mix Asphalt Pavement equal to the depth of the existing pavement

STATE OF MAINE
DEPARTMENT OF TRANSPORTATION

IM-1681(910)S

PIN 16819.10
BRIDGE NO. AS NOTED
BRIDGE PLANS

		BY	DATE
PROJ. MANAGER			
DESIGN-DETAILED	R. BLUNT	D. SHAW	
CHECKED-REVIEWED			
DESIGN2-DETAILED2			
DESIGN3-DETAILED3			
REVISIONS 1			
REVISIONS 2			
REVISIONS 3			
REVISIONS 4			
FIELD CHANGES			

SIGNATURE

P.E. NUMBER

DATE

INTERSTATE 95 NORTHBOUND
BRIDGE WEARING SURFACE REHABILITATION
SHERMAN TO HOULTON AROOSTOOK COUNTY

PLAN
LINE ROAD AND B STREAM

SHEET NUMBER
2
OF 8

Filename: ...\002_Line_Road-B_Stream.dgn Division: BRIDGE Username: david.shaw Date:2/9/2010

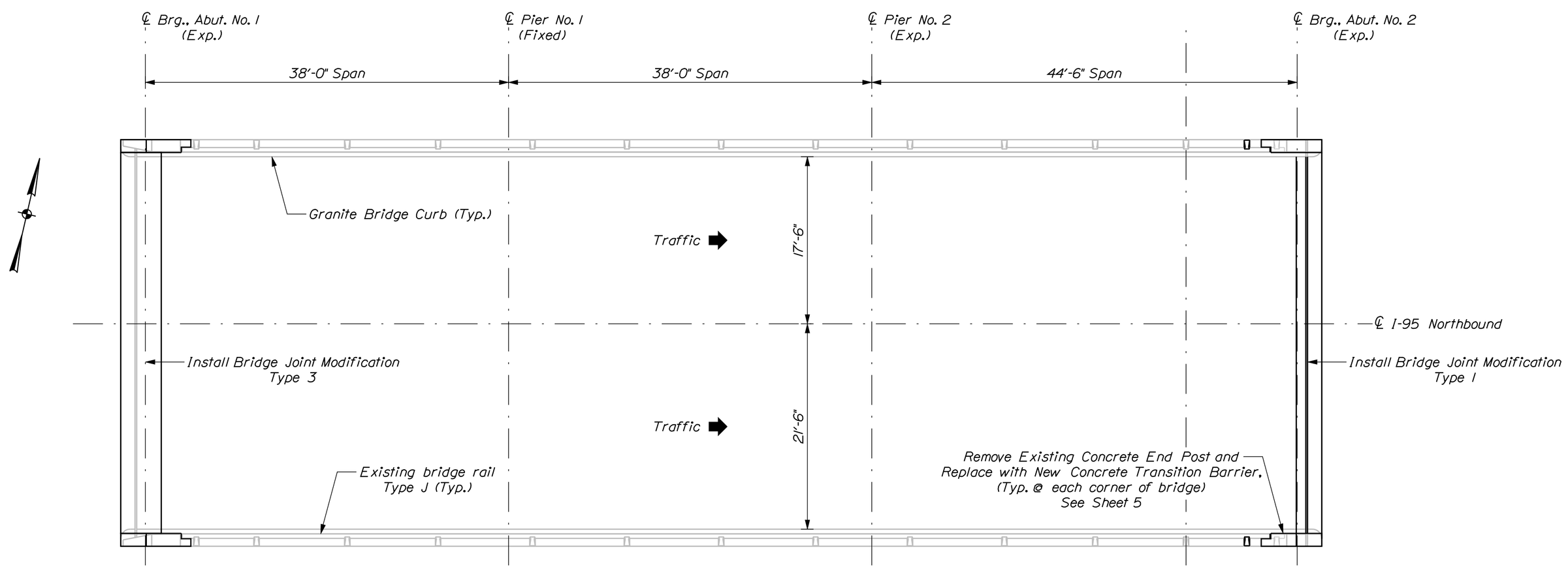

I-95 NORTHBOUND OVER BANGOR & AROOSTOOK RAILROAD

Bridge No. 1383
Remove 1 1/2" of existing pavement and replace with Hot Mix Asphalt
Pavement equal to the depth of the existing pavement removed

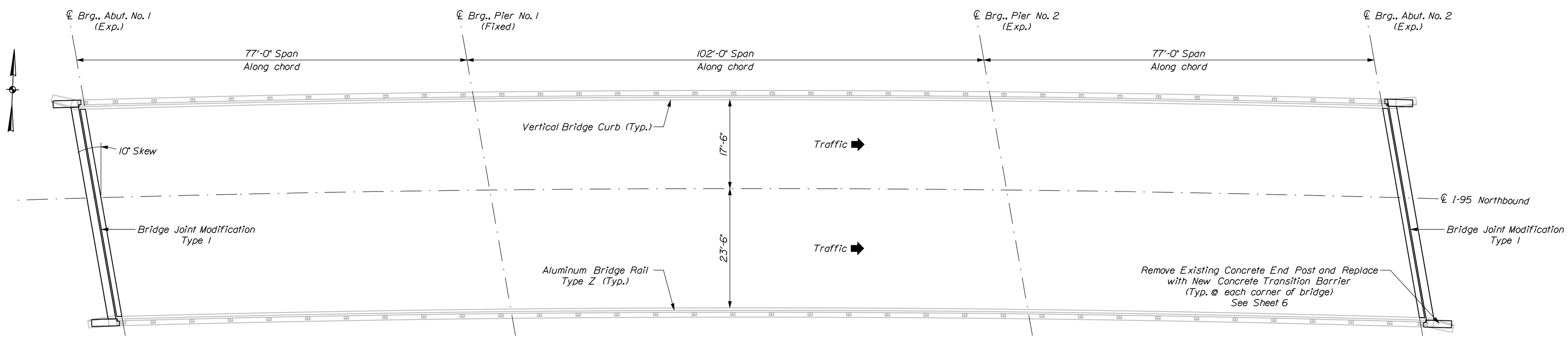

I-95 NORTHBOUND OVER MEDUXNEKEAG RIVER

Bridge No. 1381
Remove existing reinforced concrete wearing surface to superstructure slab and install new concrete wearing surface equal to the depth removed

Note: The existing concrete end post shall be adequately removed, as approved by the Resident, to install the new concrete transition barrier.

STATE OF MAINE
DEPARTMENT OF TRANSPORTATION

IM-1681(910)S

PIN 16819.10
BRIDGE NO. AS NOTED

BRIDGE PLANS

	BY	DATE
PROJ. MANAGER		
DESIGN-DETAILED	R. BLUNT	
CHECKED-REVIEWED	D. SHAW	
DESIGN2-DETAILED2		
DESIGN3-DETAILED3		
REVISIONS 1		
REVISIONS 2		
REVISIONS 3		
REVISIONS 4		
FIELD CHANGES		

SIGNATURE

P.E. NUMBER

DATE

INTERSTATE 95 NORTHBOUND
BRIDGE WEARING SURFACE REHABILITATION
SHERMAN TO HOULTON AROOSTOOK COUNTY

PLAN

BANGOR & AROOSTOOK RR AND MEDUXNEKEAG RIVER

SHEET NUMBER
3
OF 8

Filename: ...\003_BARR-Meduxnekeag_River.dgn Division: BRIDGE Username: david.shaw Date:2/9/2010

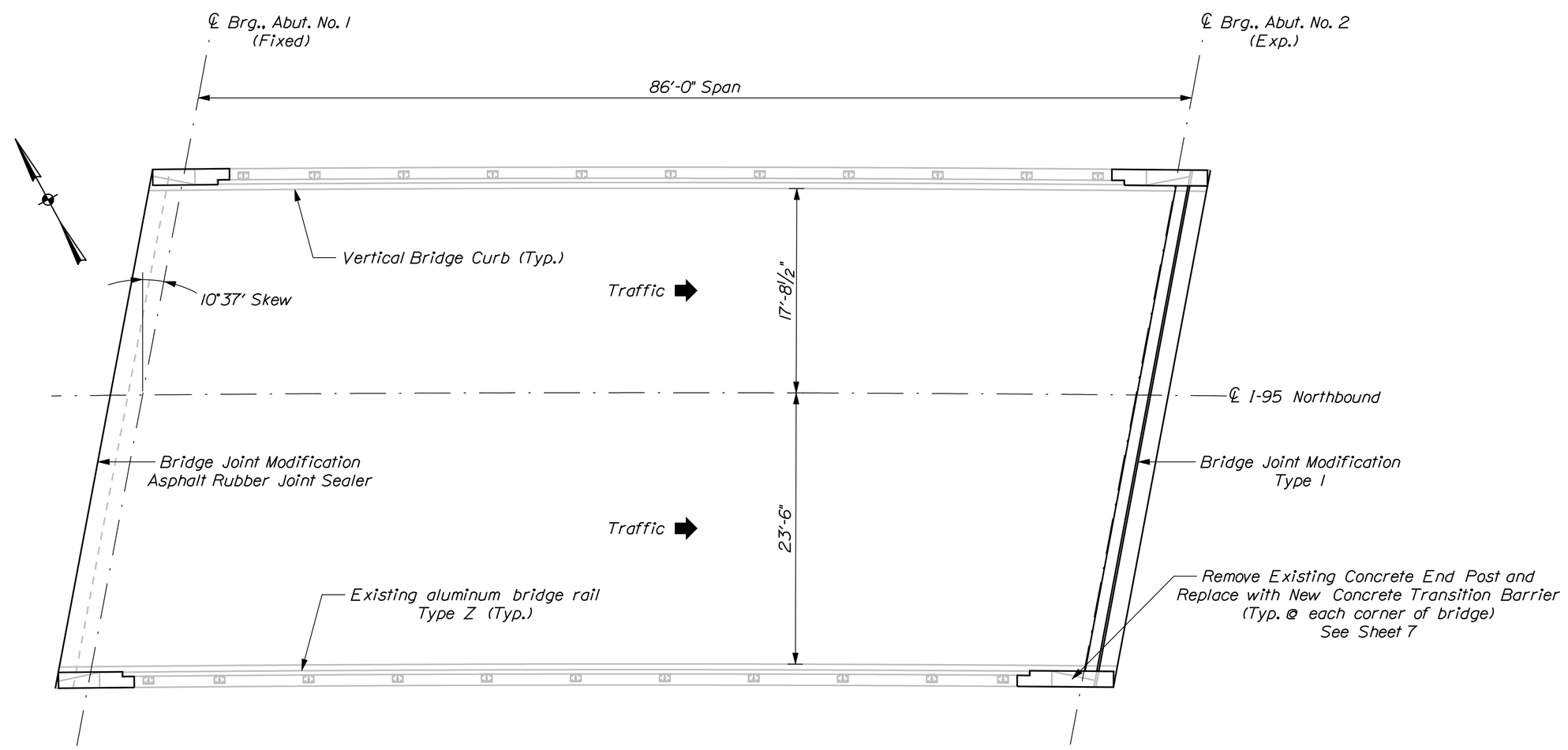

I-95 NORTHBOUND OVER FOXCROFT ROAD

Bridge No. 1380

Remove existing reinforced concrete wearing surface to superstructure slab and install new concrete wearing surface equal to the depth removed

STATE OF MAINE
DEPARTMENT OF TRANSPORTATION

IM-1681(910)S

PIN 16819.10

BRIDGE NO. AS NOTED

BRIDGE PLANS

		BY	DATE
PROJ. MANAGER			
DESIGN-DETAILED	R. BLUNT	D. SHAW	
CHECKED-REVIEWED			
DESIGN2-DETAILED2			
DESIGN3-DETAILED3			
REVISIONS 1			
REVISIONS 2			
REVISIONS 3			
REVISIONS 4			
FIELD CHANGES			

SIGNATURE

P.E. NUMBER

DATE

INTERSTATE 95 NORTHBOUND
BRIDGE WEARING SURFACE REHABILITATION
SHERMAN TO HOULTON AROOSTOOK COUNTY

PLAN
FOXCROFT ROAD

SHEET NUMBER

4

OF 8

Filename: ...\msta\004_Foxcroft_Road.dgn Division: BRIDGE Username: david.shaw Date:2/9/2010

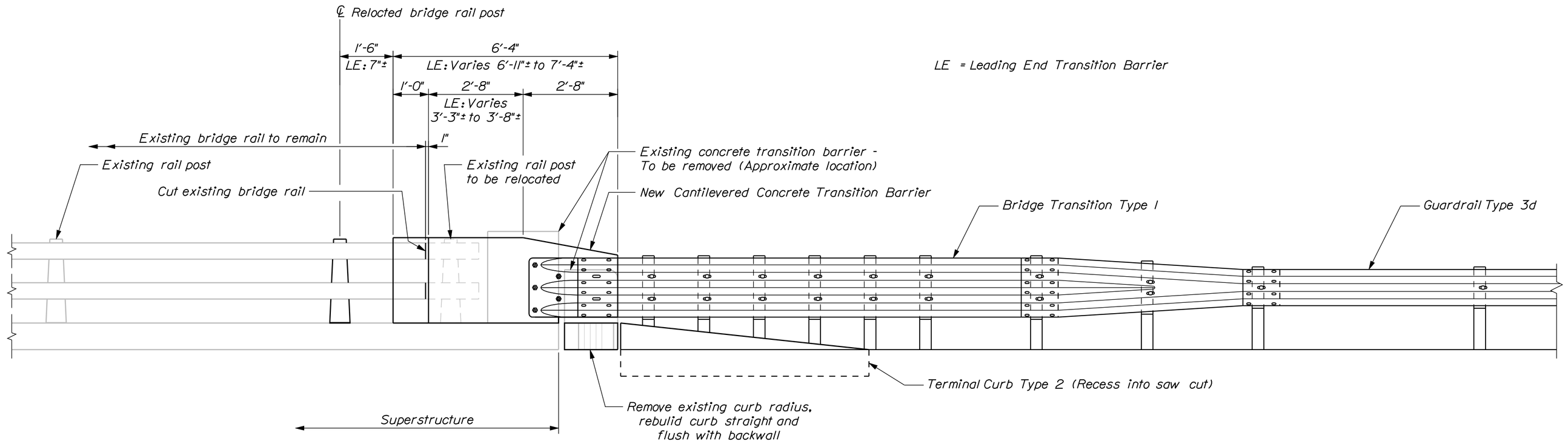

CONCRETE TRANSITION BARRIER

B Stream and Bangor Aroostook Railroad
Typical both sides of roadway at trailing end of bridge
Leading end transition barriers are similiar but do not require rail post relocation.

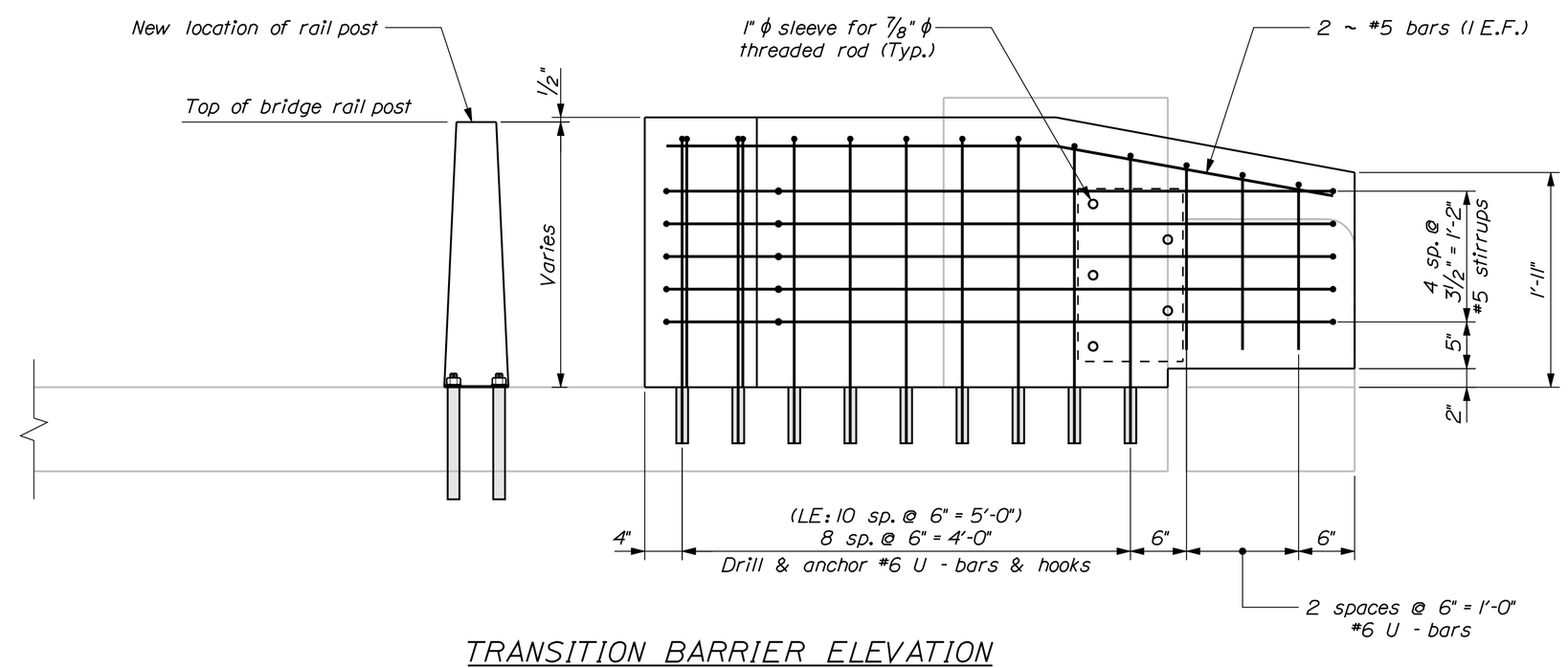

TRANSITION BARRIER ELEVATION

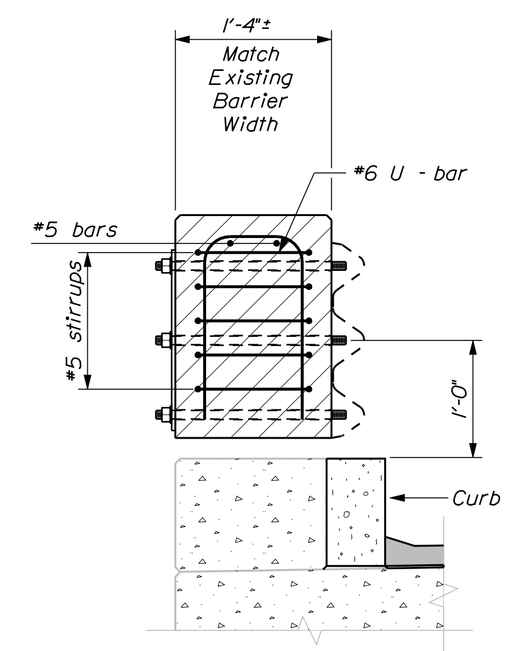

SECTION THROUGH NOSE

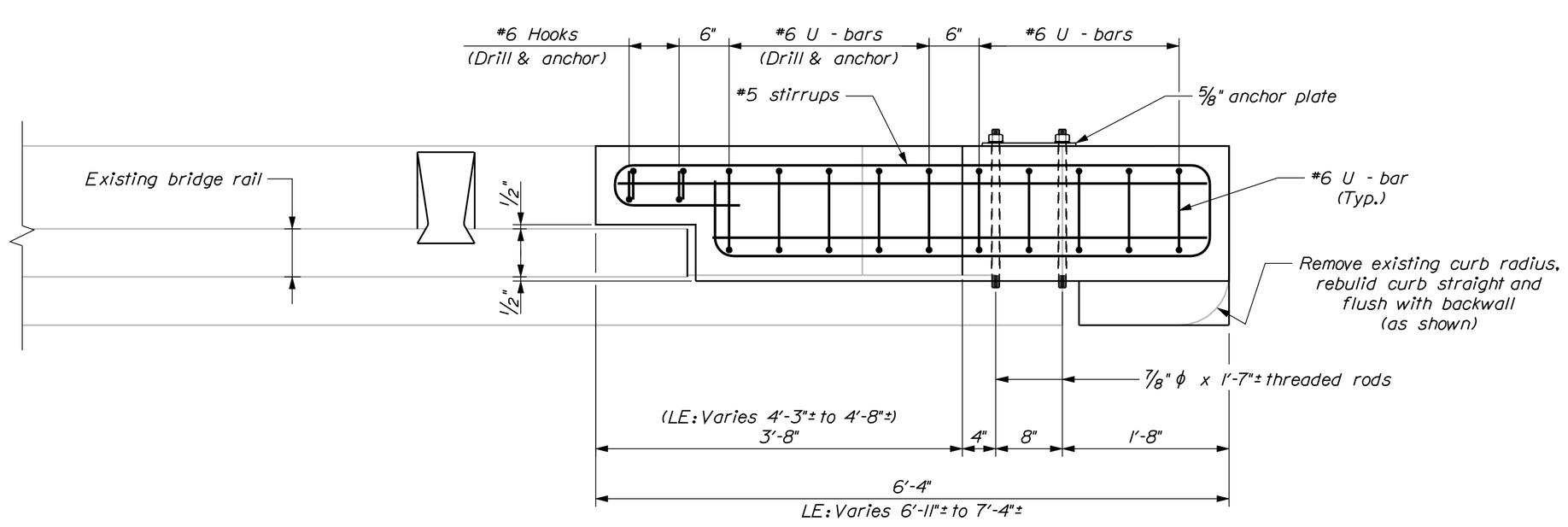

TRANSITION BARRIER PLAN

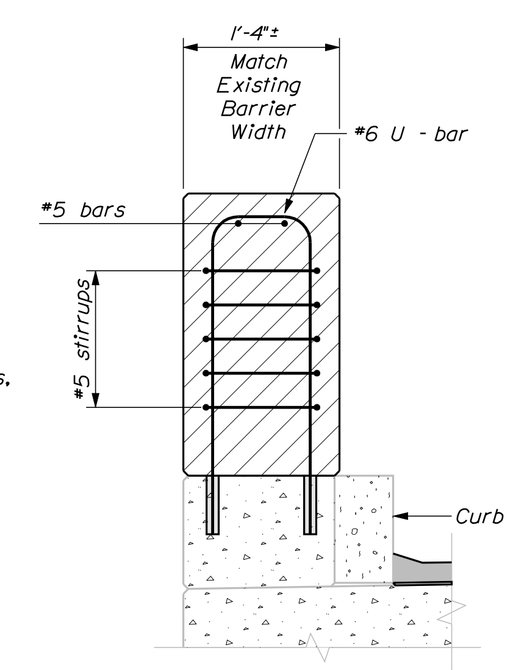

SECTION THROUGH STEM

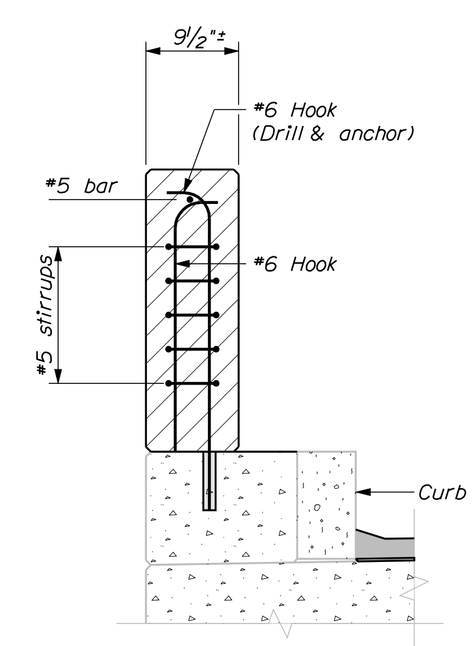

SECTION THROUGH RECESS

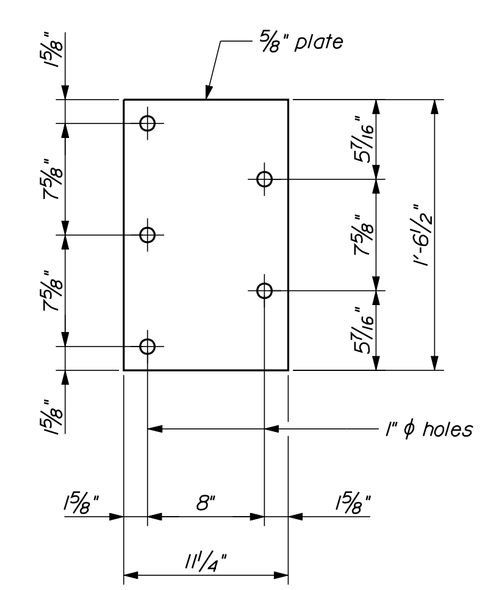

ANCHOR PLATE

CONCRETE TRANSITION BARRIER NOTES

1. Refer to Standard Details Section 526 - Concrete Transition Barrier for details and information not shown.

2. Reinforcing steel for the Transition Barriers is based on details shown in the Standard Details. Reinforcing steel shall be modified to fit the details and conditions shown on the plans. Payment for modifying reinforcing steel and for drilling and anchoring bars as shown will be considered incidental to Item No. 526.34, Permanent Concrete Transition Barrier.

3. Anchor plates and threaded rods shall be galvanized in accordance with the Standard Specifications and the Standard Details.

4. The bridge rail post bolt anchorage system shall be from MaineDOT's Qualified Products List or an approved equal. The Contractor shall submit the proposed system to the Resident for review prior to use. The bolt anchorages shall be installed in strict accordance with the selected manufacturer's recommendations. The anchor bolts shall have an ultimate tension capacity of 81 kips. Payment for bridge rail post relocation and associated materials, equipment, labor and incidentals necessary to complete the work will be considered incidental to Item No. 526.34, Permanent Concrete Transition Barrier.

5. The contractor shall locate existing curb reinforcing steel and adjust dowel and bridge rail post anchor stud locations to avoid cutting existing bars. Any adjustments from plan dimensions shall be approved by the Resident.

STATE OF MAINE
DEPARTMENT OF TRANSPORTATION

IM-1681(910)S

PIN 16819.10

BRIDGE NO. As Noted

BRIDGE PLANS

PROJ. MGR:		BY	DATE
DESIGN-DETAILED	R. Blunt	D. Damren	
CHECKED-REVIEWED			
DESIGN2-DETAILED2			
DESIGN3-DETAILED3			
REVISIONS 1			
REVISIONS 2			
REVISIONS 3			
REVISIONS 4			
FIELD CHANGES			

SIGNATURE

P.E. NUMBER

DATE

INTERSTATE 95 NORTHBOUND
B STREAM & BANGOR AROOSTOOK RAILROAD
SHERMAN TO HOULTON AROOSTOOK COUNTY

TYPICAL TRANSITION BARRIERS

SHEET NUMBER

5

OF 8

Filename: ...\msta\005_TB_B-Stream-BARR.dgn Division: BRIDGE Username: david.shaw Date:2/9/2010

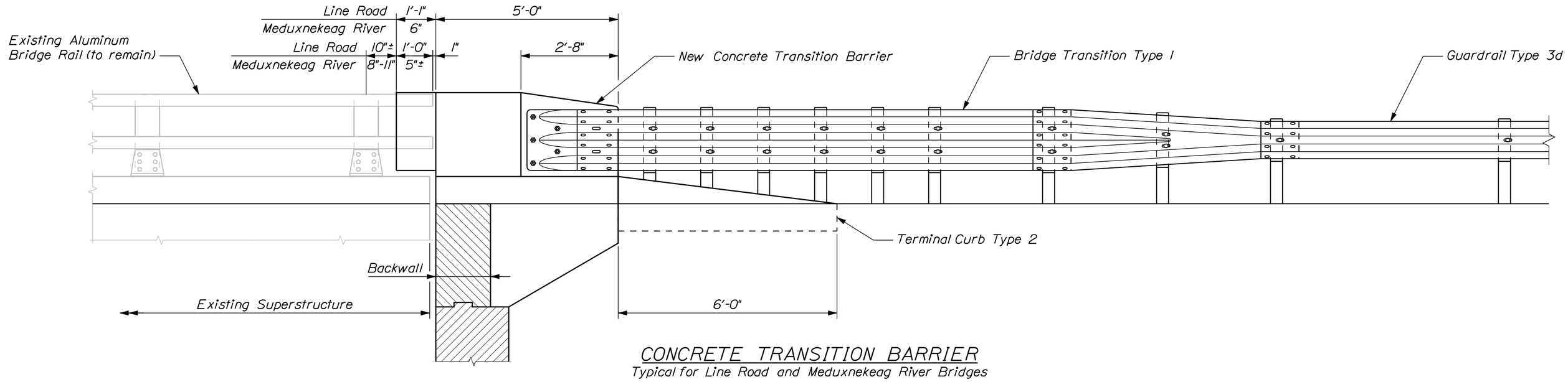

CONCRETE TRANSITION BARRIER

Typical for Line Road and Meduxnekeag River Bridges

CONCRETE TRANSITION BARRIER NOTES

1. Refer to Standard Details Section 526 - Concrete Transition Barrier for details and information not shown.

2. Reinforcing steel for the Transition Barriers is based on details shown in the Standard Details. Reinforcing steel shall be modified to fit the details and conditions shown on the plans. Payment for modifying reinforcing steel and for drilling and anchoring bars as shown will be considered incidental to Item No. 526.34, Permanent Concrete Transition Barrier.

3. Anchor plates and threaded rods shall be galvanized in accordance with the Standard Specifications and the Standard Details.

4. The contractor shall locate existing curb reinforcing steel and adjust dowel and bridge rail post anchor stud locations to avoid cutting existing bars. Any adjustments from plan dimensions shall be approved by the Resident.

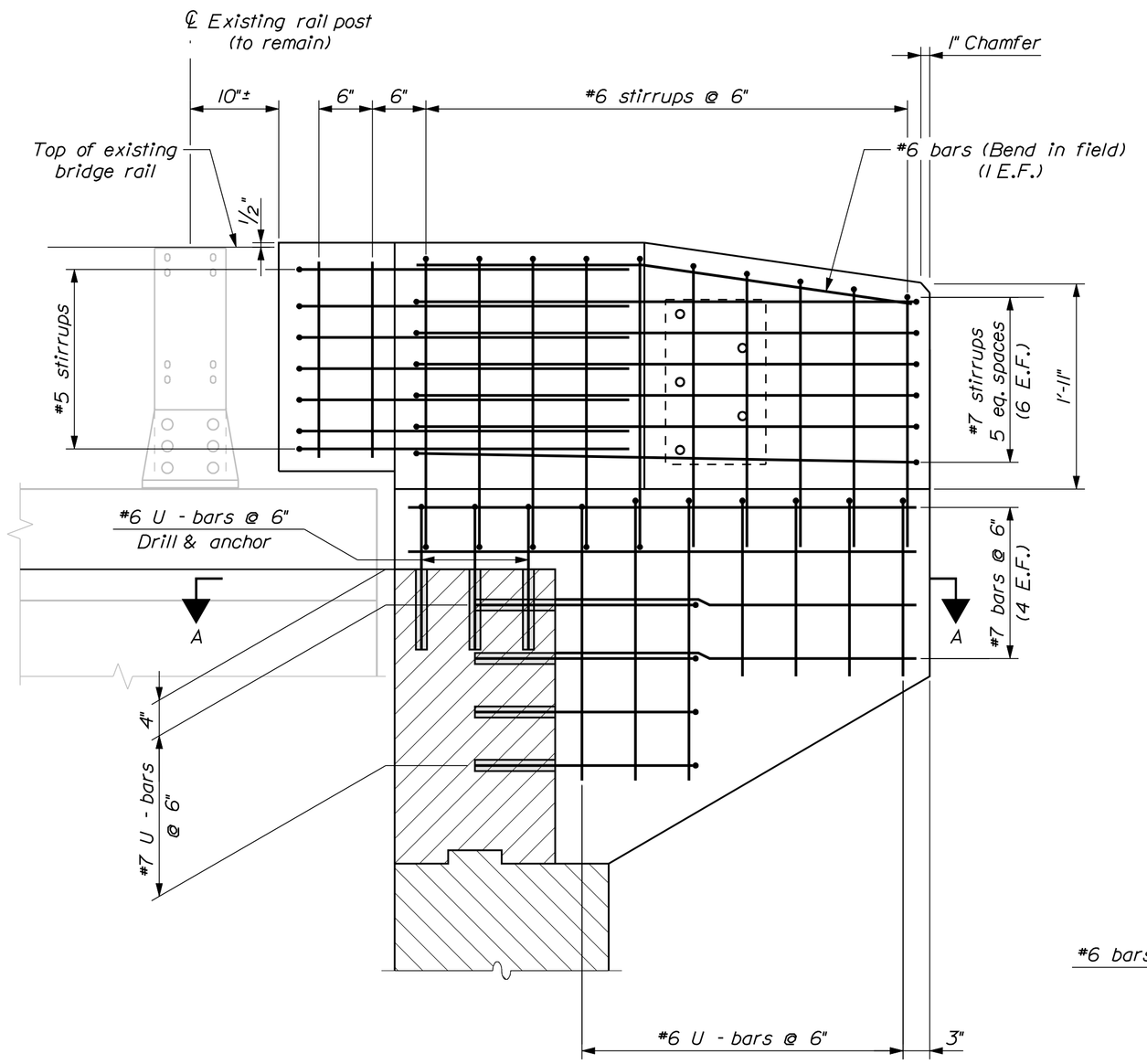

TRANSITION BARRIER ELEVATION

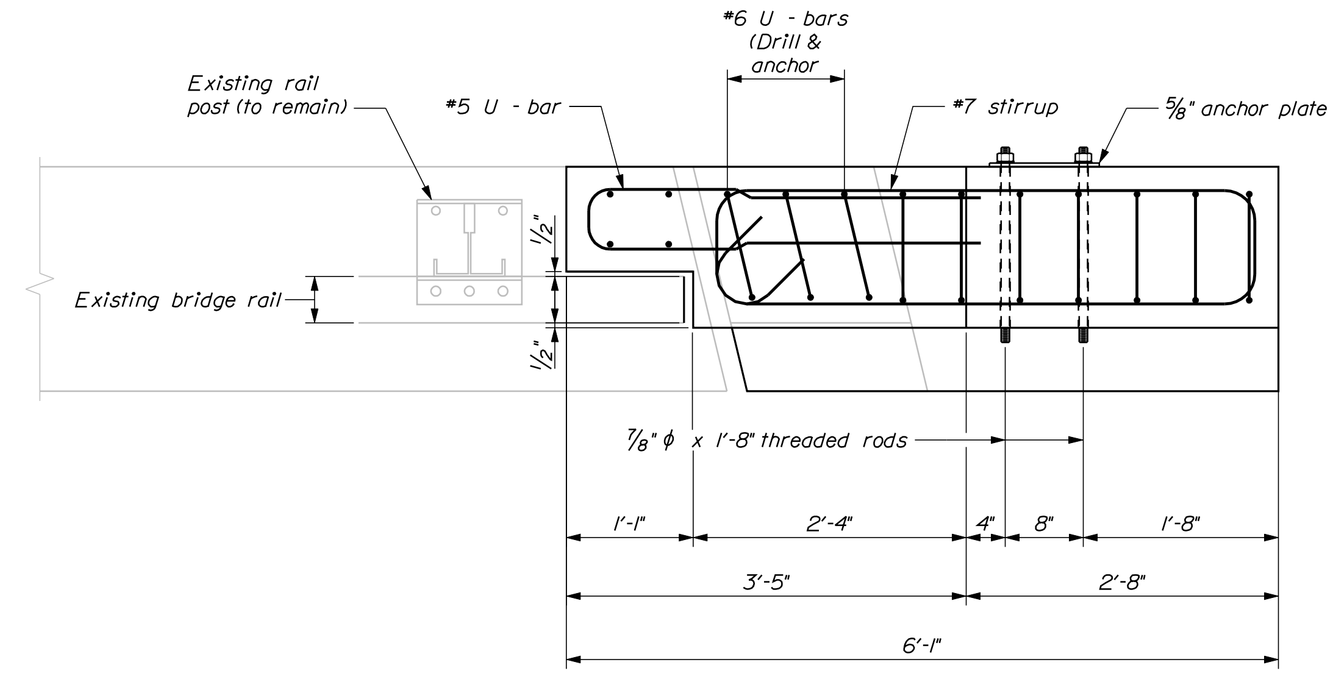

TRANSITION BARRIER PLAN

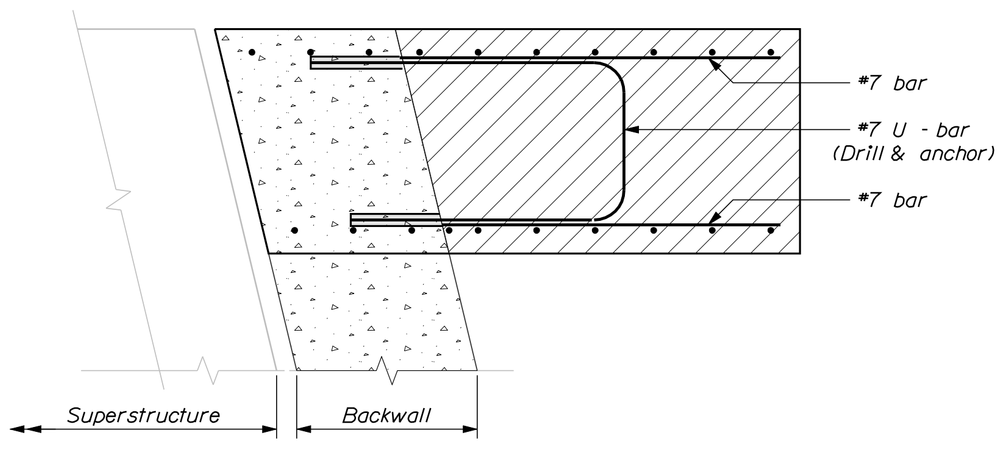

SECTION A-A

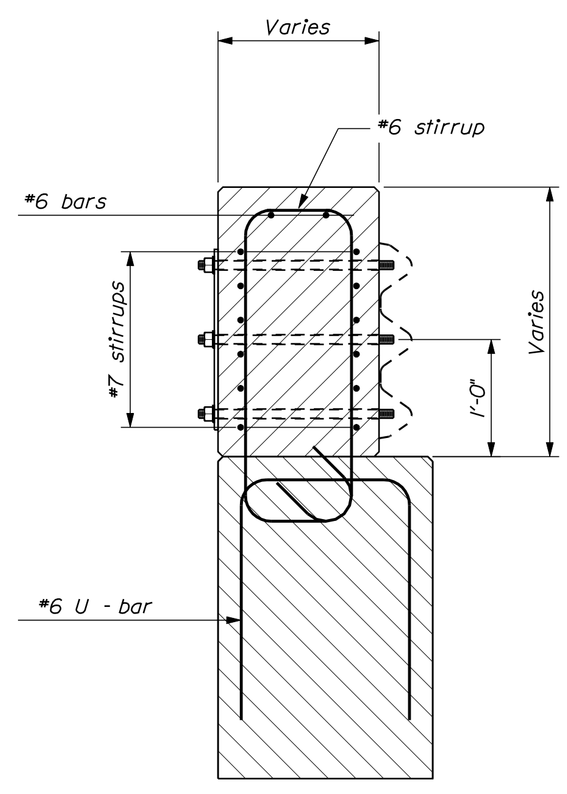

SECTION THROUGH NOSE

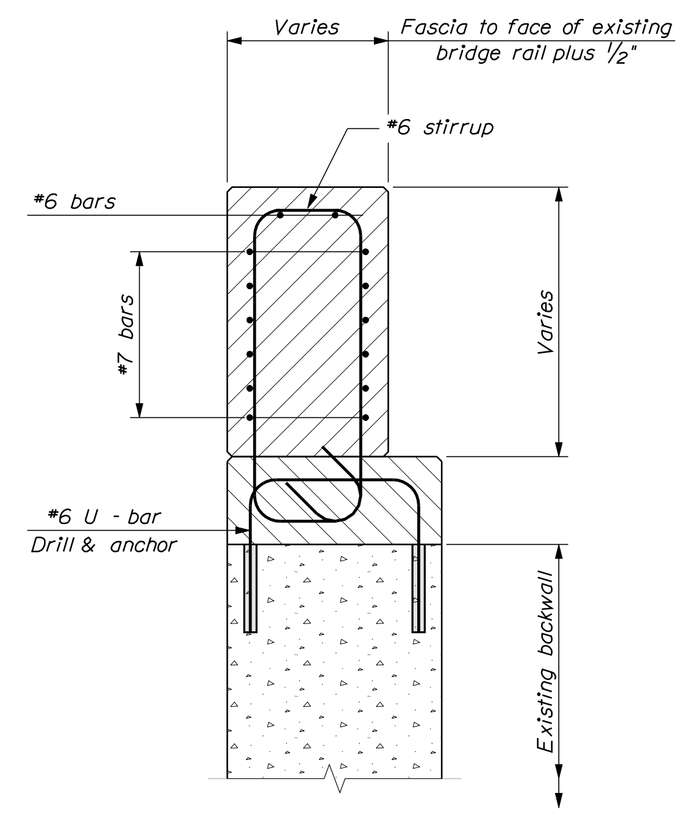

SECTION THROUGH STEM

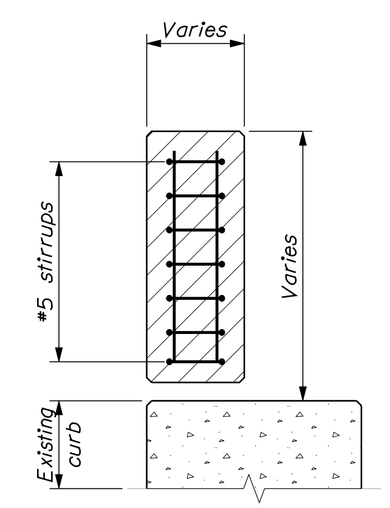

SECTION THROUGH RECESS

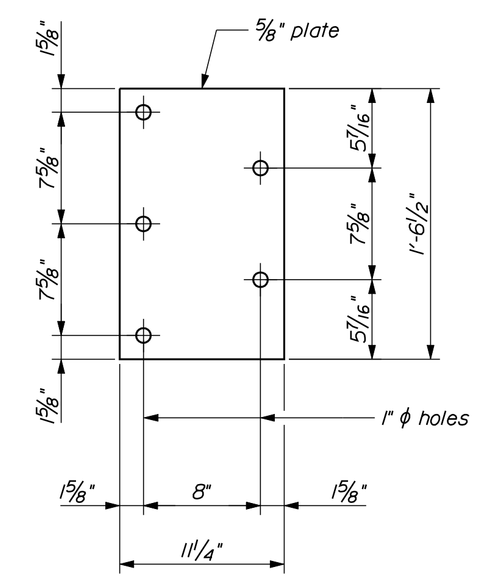

ANCHOR PLATE

STATE OF MAINE
DEPARTMENT OF TRANSPORTATION

IM-1681(910)S

PIN 16819.10

BRIDGE NO. As Noted

BRIDGE PLANS

PROJ. MGR.	BY	DATE
DESIGN-DETAILED	R. Blunt	D. Damren
CHECKED-REVIEWED	------	------
DESIGN2-DETAILED2	------	------
DESIGN3-DETAILED3	------	------
REVISIONS: 1	------	------
REVISIONS: 2	------	------
REVISIONS: 3	------	------
REVISIONS: 4	------	------
FIELD CHANGES	------	------

SIGNATURE

P.E. NUMBER

DATE

INTERSTATE 95 NORTHBOUND
LINE ROAD & MEDUXNEKEAG RIVER
SHERMAN TO HOULTON AROOSTOOK COUNTY

TYPICAL TRANSITION BARRIERS

SHEET NUMBER

6

OF 8

Filename: ...\006_TB_Line-Meduxnekeag.dgn Division: BRIDGE Username: david.shaw Date:2/9/2010

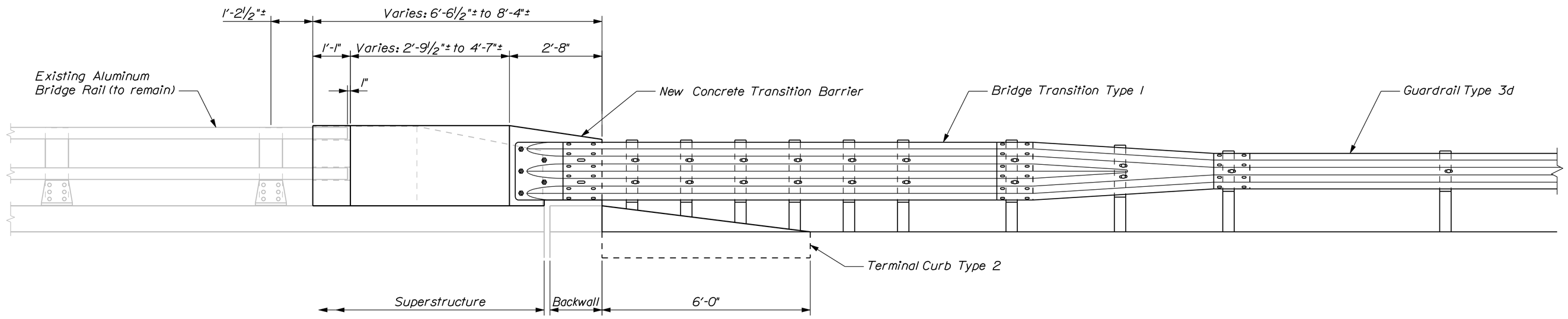

CONCRETE TRANSITION BARRIER

Foxcroft Road

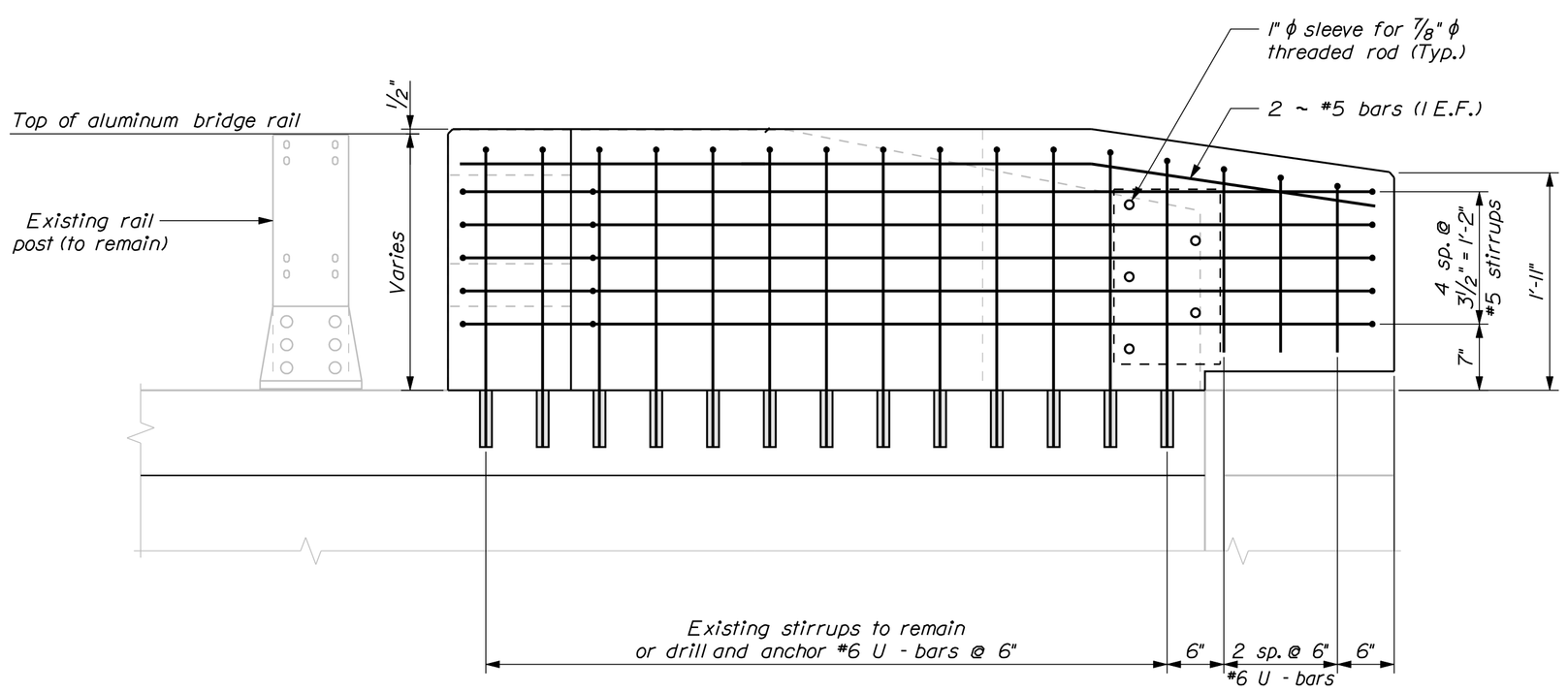

TRANSITION BARRIER ELEVATION

Northeast concrete transition barrier shown
other transition barrier reinforcement similar
Existing reinforcement not shown

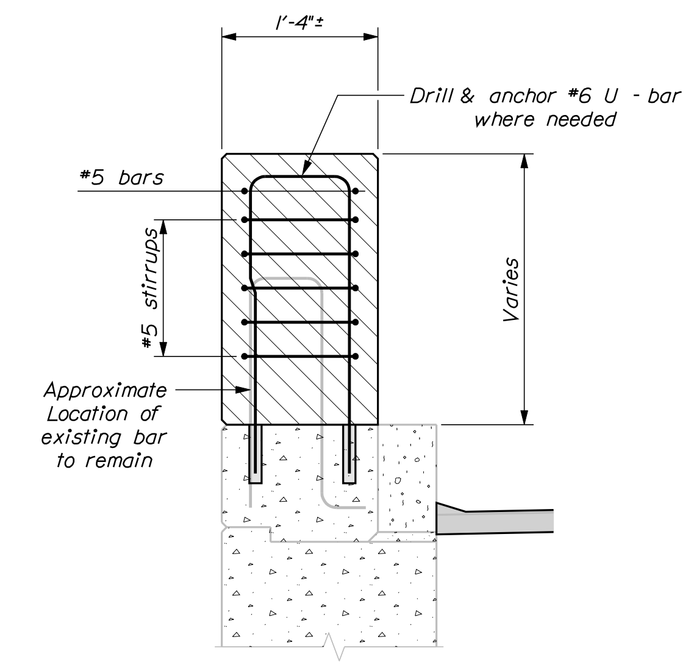

SECTION THROUGH STEM

CONCRETE TRANSITION BARRIER NOTES

1. Refer to Standard Details Section 526 - Concrete Transition Barrier for details and information not shown.

2. Reinforcing steel for the Transition Barriers is based on details shown in the Standard Details. Reinforcing steel shall be modified to fit the details and conditions shown on the plans. Payment for modifying reinforcing steel and for drilling and anchoring bars as shown will be considered incidental to Item No. 526.34, Permanent Concrete Transition Barrier.

3. Anchor plates and threaded rods shall be galvanized in accordance with the Standard Specifications and the Standard Details.

4. The contractor shall locate existing curb reinforcing steel and adjust dowel and bridge rail post anchor stud locations to avoid cutting existing bars. Any adjustments from plan dimensions shall be approved by the Resident.

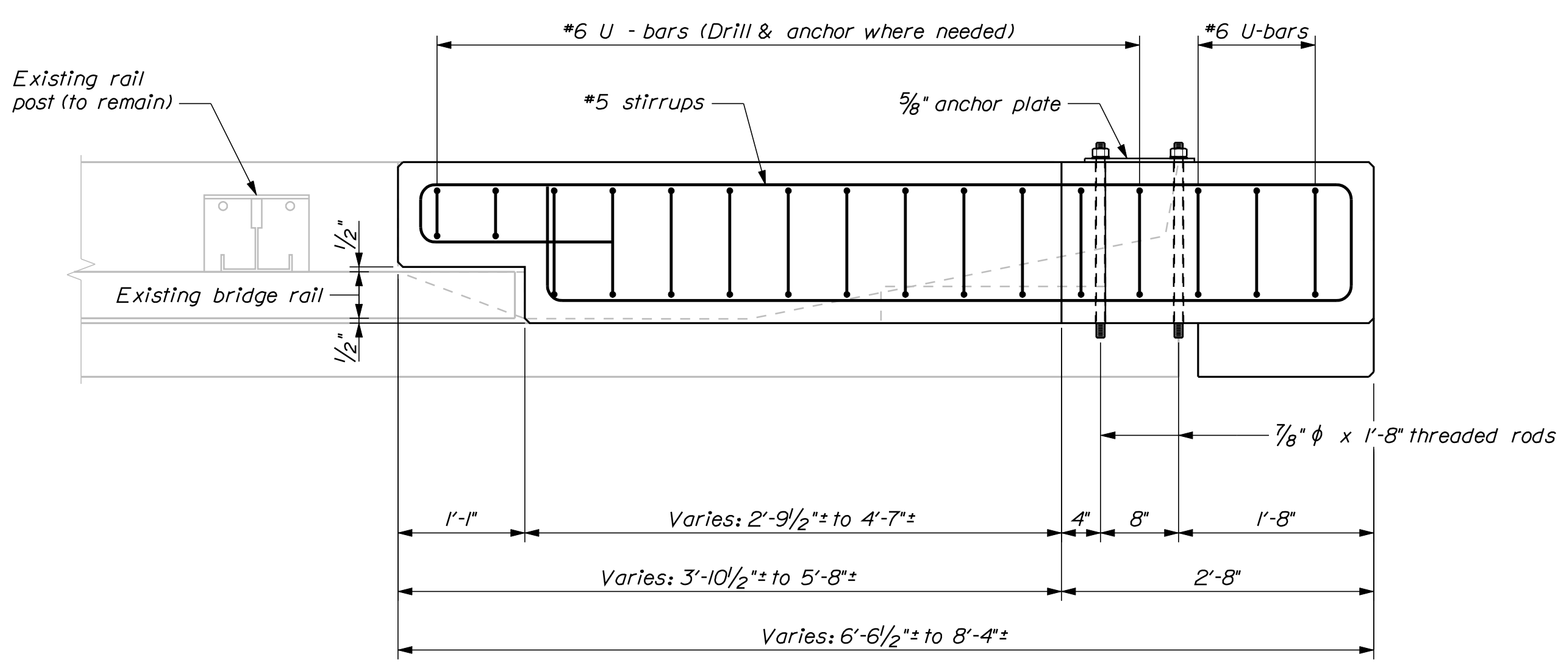

TRANSITION BARRIER PLAN

Southwest concrete transition barrier shown
other transition barrier reinforcement similar

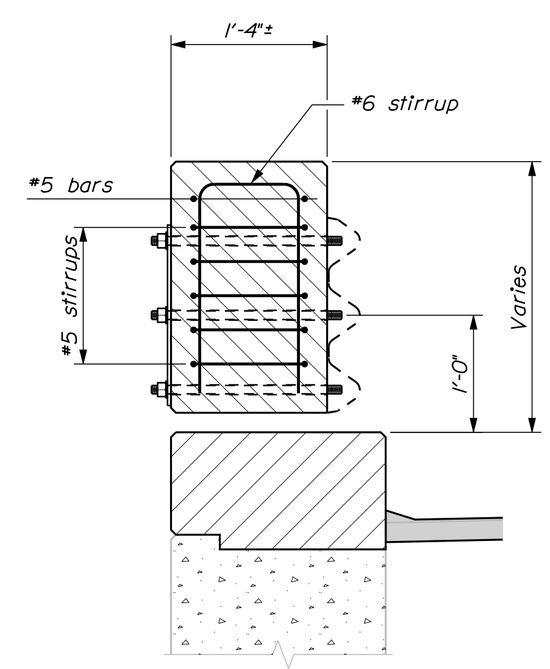

SECTION THROUGH NOSE

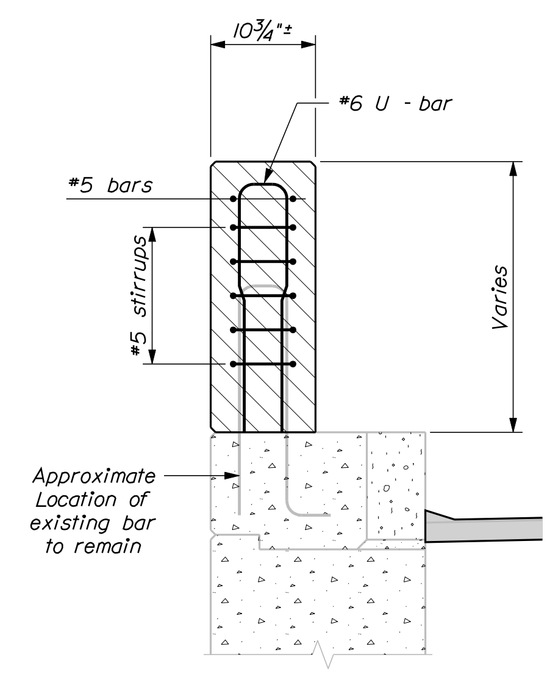

SECTION THROUGH RECESS

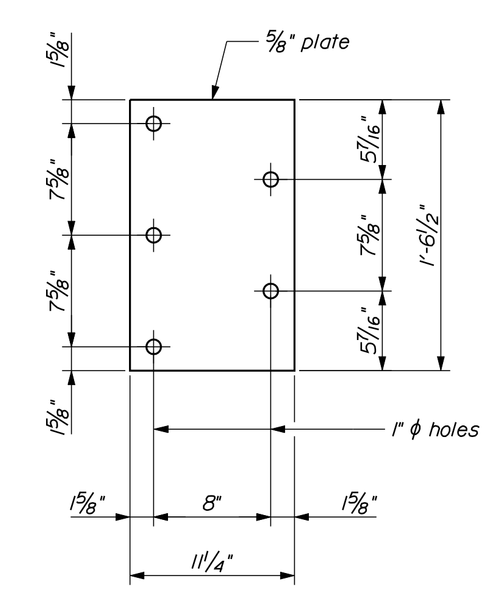

ANCHOR PLATE

STATE OF MAINE
DEPARTMENT OF TRANSPORTATION

IM-1681(910)S

PIN 16819.10

BRIDGE NO. As Noted

BRIDGE PLANS

PROJ. MGR.		BY	DATE
DESIGN-DETAILED	R. Blunt	D. Domren	
CHECKED-REVIEWED			
DESIGN2-DETAILED2			
DESIGN3-DETAILED3			
REVISIONS 1			
REVISIONS 2			
REVISIONS 3			
REVISIONS 4			
FIELD CHANGES			

SIGNATURE

P.E. NUMBER

DATE

INTERSTATE 95 NORTHBOUND
FOXCROFT ROAD
SHERMAN TO HOULTON AROOSTOOK COUNTY

TYPICAL TRANSITION BARRIERS

SHEET NUMBER

7

OF 8

Filename: ...\msta\007_TB-Foxcroft_Road.dgn Division: BRIDGE Username: david.show Date:2/9/2010

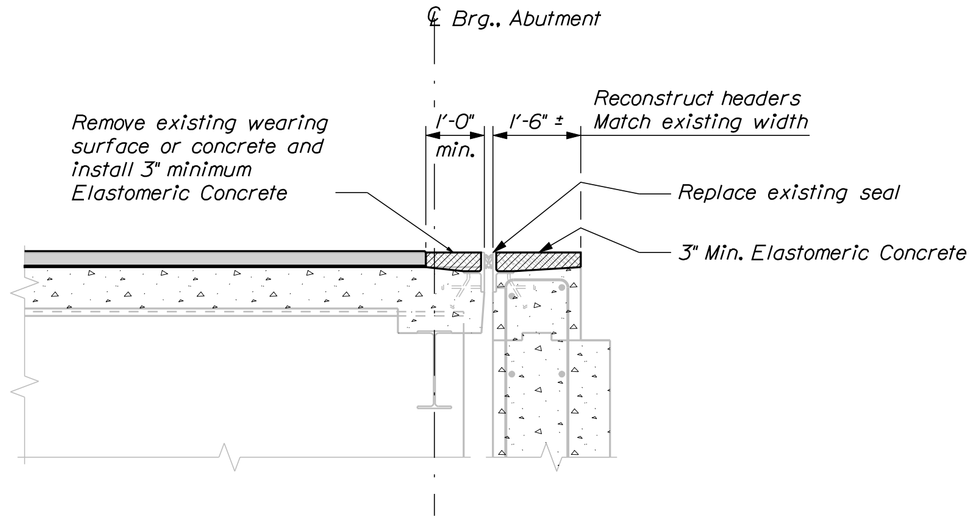

BRIDGE JOINT MODIFICATION TYPE 1

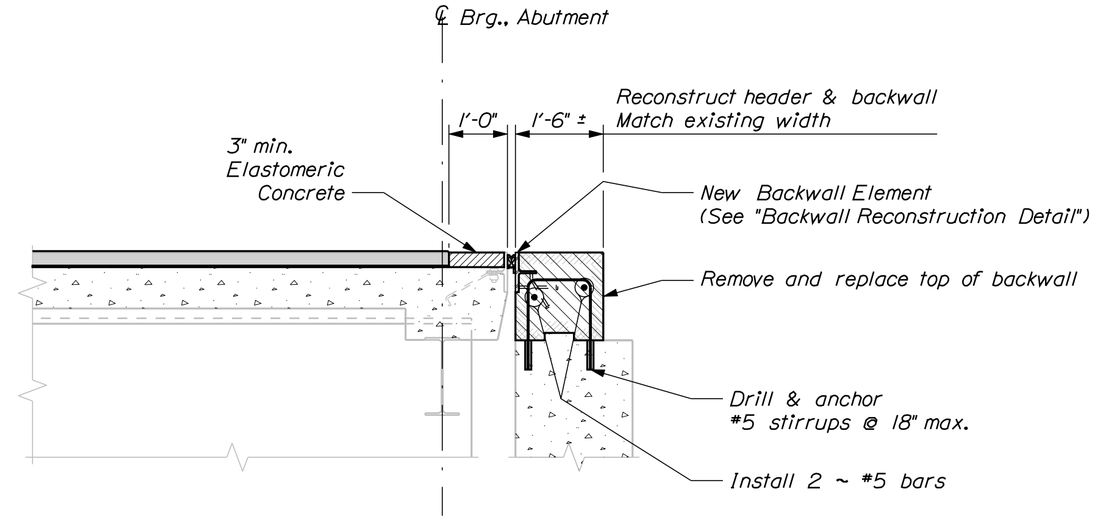

BRIDGE JOINT MODIFICATION TYPE 2

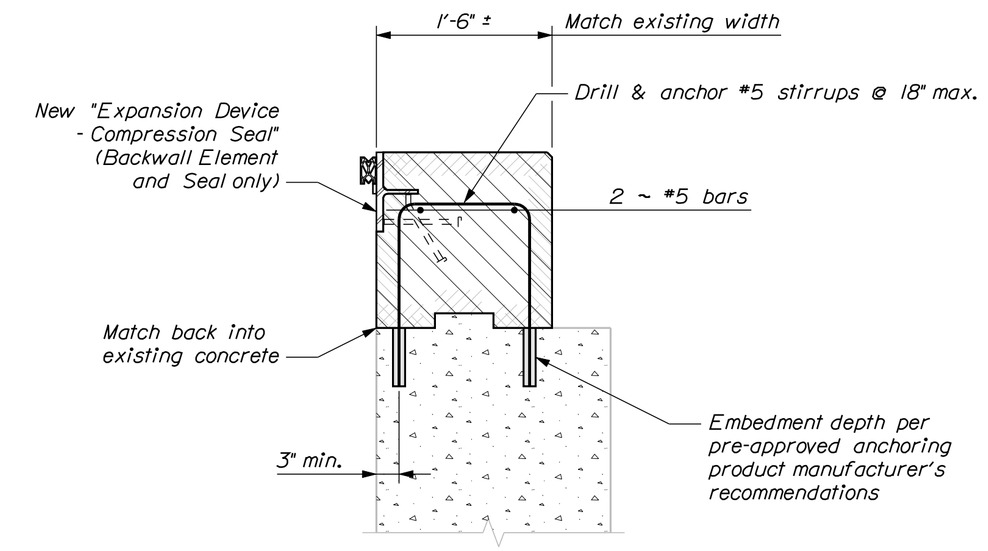

BACKWALL RECONSTRUCTION DETAIL

See Standard Details Section 520 for "Expansion Device"

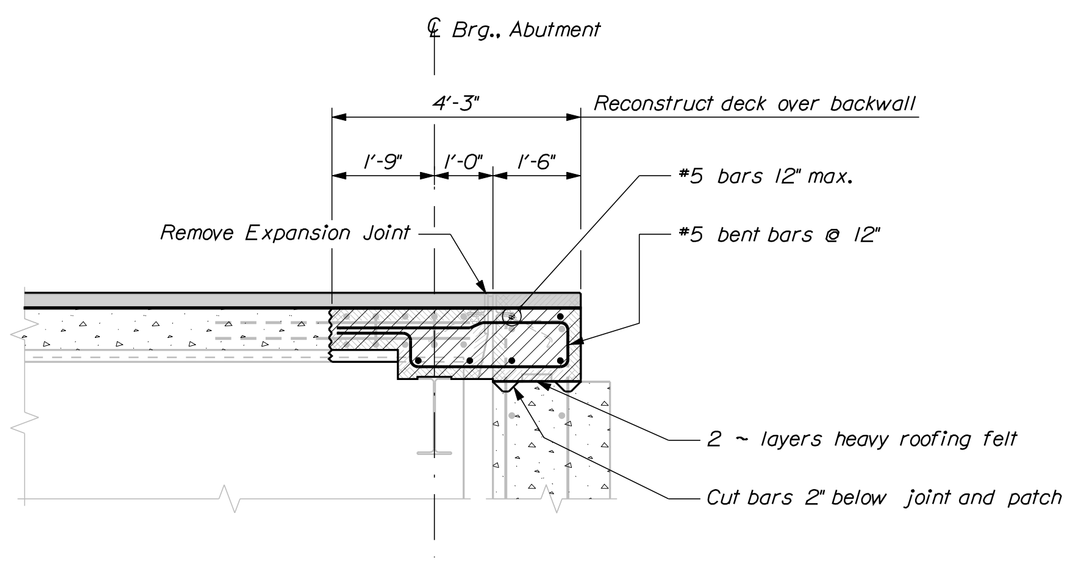

BRIDGE JOINT MODIFICATION TYPE 3

Refer to "Reconstructed Deck & Overhang Detail" for more information

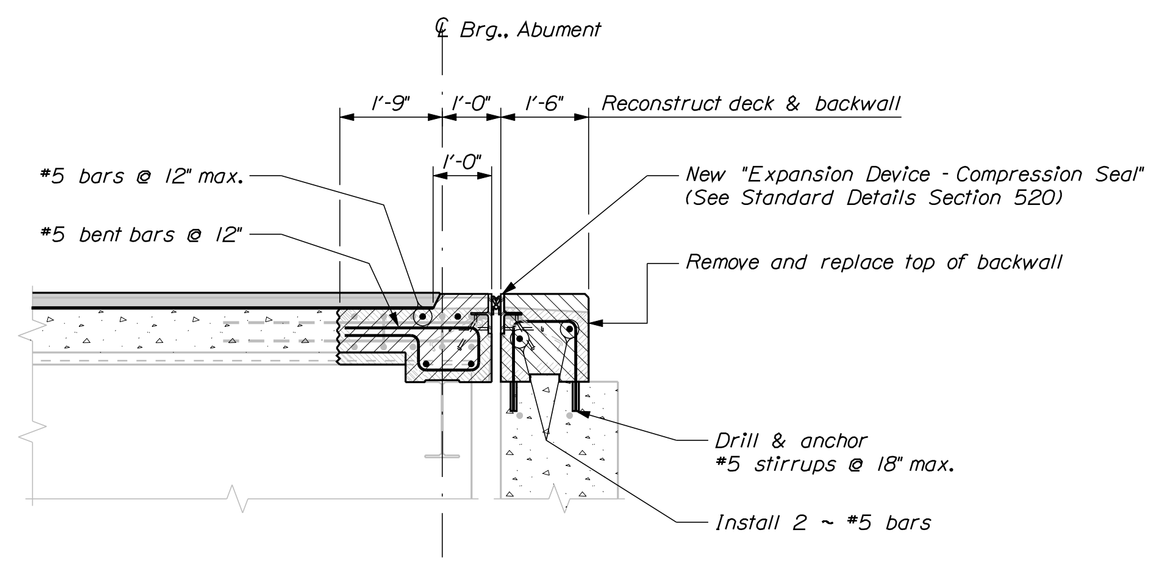

BRIDGE JOINT MODIFICATION TYPE 5

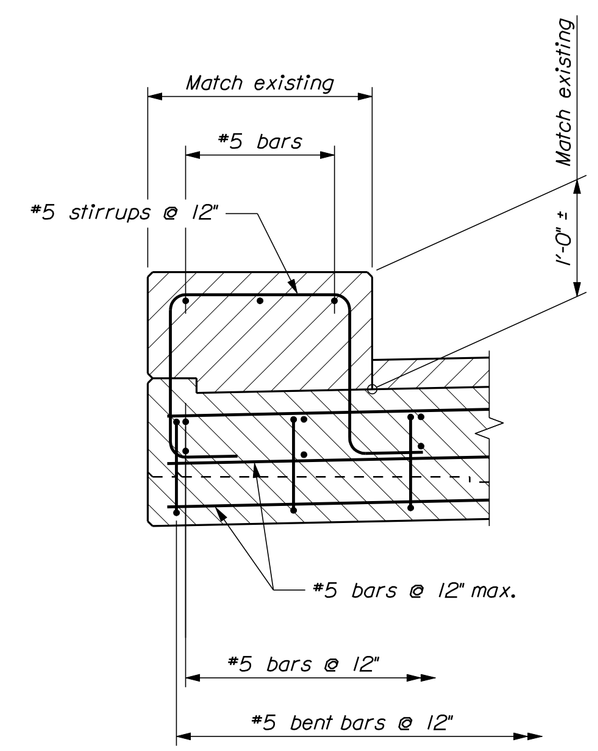

RECONSTRUCTED CURB & OVERHANG DETAIL

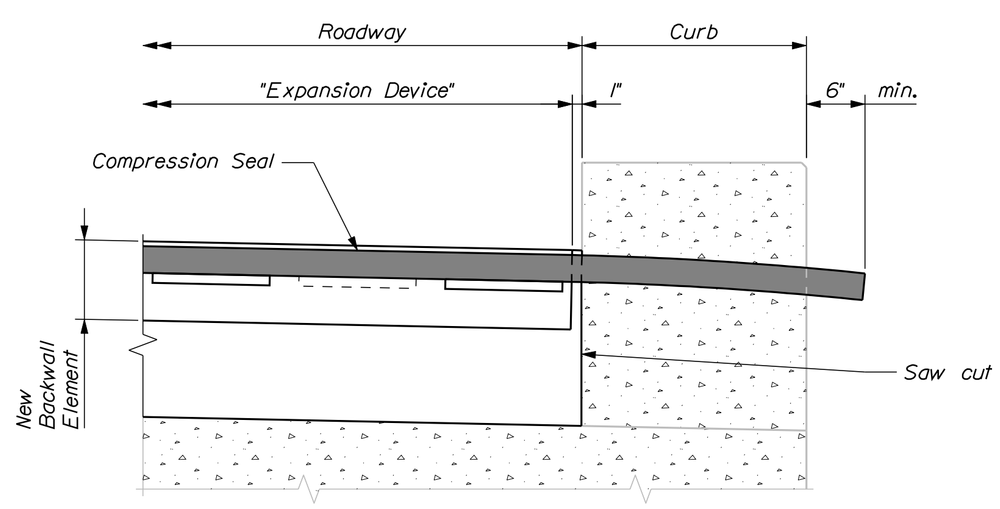

BRIDGE JOINT DETAIL AT CURB

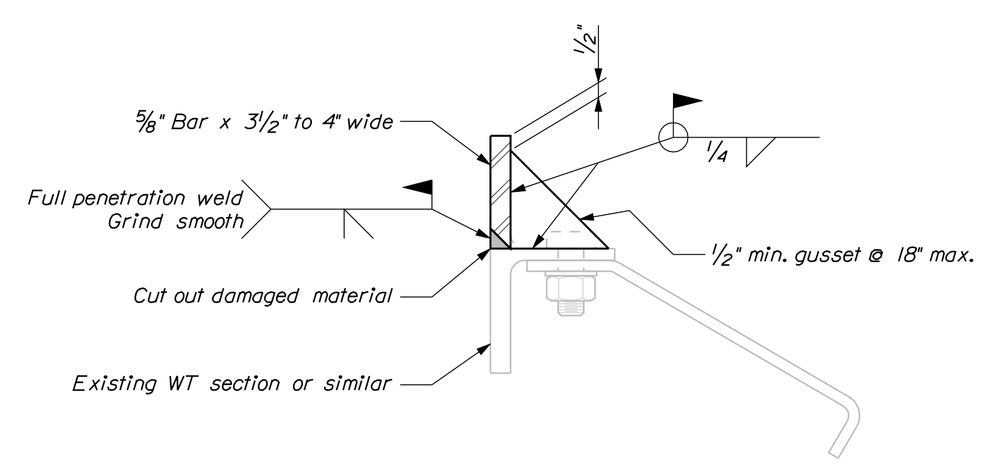

LONGITUDINAL BRIDGE JOINT MODIFICATION

For existing supersturcture elements where required

BRIDGE JOINT MODIFICATION NOTES

1. Refer to Standard Details Sections 502 and 520 for details and information not shown.

2. All concrete surfaces where elastomeric concrete is to be applied shall have a 1/4-in. minimum anchor profile or roughened surface.

3. Elastomeric concrete shall be applied according to the manufacturer's recommendations.

4. All new steel supplied for the bridge joint modification shall be uncoated.

5. The Contractor shall be fully responsible for selecting the appropriate seal based on the movement rating from the approved products list.

STATE OF MAINE
DEPARTMENT OF TRANSPORTATION

IM-1681(910)S

PIN 16819.10

BRIDGE NO. AS NOTED

BRIDGE PLANS

	BY	DATE
DESIGN-DETAILED	R. BLUNT	
CHECKED-REVIEWED	D. SHAW	
DESIGN2-DETAILED2		
DESIGN3-DETAILED3		
REVISIONS 1		
REVISIONS 2		
REVISIONS 3		
REVISIONS 4		
FIELD CHANGES		

SIGNATURE

P.E. NUMBER

DATE

BRIDGE JOINT MODIFICATION TYPES & ASSOCIATED DETAILS

TYPICAL JOINT MODIFICATION DETAILS

SHEET NUMBER

8

OF 8

Filename: ...\msta\008_Typical_Details.dgn Division: BRIDGE Username: david.shaw Date:2/9/2010