205

CENTRAL MAINE POWER COMPANY
Site Location of Development Act // Natural Resources Protection Act
Upgrade of Transmission Corridor – 78 Municipalities

Licensee Response

206

PIERCE ATWOOD LLP
ATTORNEYS AT LAW

Thomas R. Doyle

One Monument Square
Portland, ME 04101

207-791-1214 voice
207-791-1350 fax
tdoyle@pierceatwood.com

pierceatwood.com

July 8, 2010

VIA EMAIL AND U.S. MAIL

Susan M. Lessard, Chair
Attn: Terry Hanson
Board of Environmental Protection
17 State House Station
Augusta, ME 04333-0017

Re: Appeal in the Matter of: Central Maine Power Co.
DEP Order L-024620-26-A-N

Dear Ms. Lessard:

On behalf of our client, Central Maine Power Company, please find enclosed the Response of Central Maine Power Company to the Appeal of Mary and David Fournier. As no reply from the Fourniers is permitted by the Department's rules, briefing in this matter is now complete.

Thank you for your assistance.

Very truly yours,

Tom Doyle

Thomas R. Doyle

TRD/cb
Enclosure
cc: Mary and David Fournier
Cynthia Bertocci
Peggy Bensinger, Esq.
Marybeth Richardson
Dawn Hallowell
Beth Callahan
Mary Smith
David Dominie

STATE OF MAINE
BOARD OF ENVIRONMENTAL PROTECTION

APPEAL IN THE MATTER OF

CENTRAL MAINE POWER COMPANY 78 Municipalities 13 Counties MAINE POWER RELIABILITY PROGRAM L-24620-26-A-N L-24620-TG-B-N L-24620-VP-C-N L-24620-IW-D-N L-24620-L6-E-N (approval)	SITE LOCATION OF DEVELOPMENT ACT NATURAL RESOURCES PROTECTION ACT FRESHWATER WETLAND ALTERATION VERNAL POOL ALTERATION INLAND WADING BIRD AND WATERFOWL HABITAT STREAM ALTERATION WATER QUALITY CERTIFICATION

RESPONSE OF CENTRAL MAINE POWER COMPANY TO APPEAL OF MARY AND DAVID FOURNIER

Central Maine Power Co. ("CMP") hereby files this response to the appeal filed by Mary and David Fournier, which challenges the Commissioner's decision to approve CMP's application for a project known as the Maine Power Reliability Program ("MPRP").

The Fourniers' raise numerous issues in their appeal, but provide little support for their view that the Commissioner erred by approving the project. They do not, for example, identify the specific findings or conclusions that they object to, provide any evidentiary basis in the record for their claims, or offer any expert testimony calling the Commissioner's conclusions into question. In short, the Fourniers are merely unhappy with the result, nothing more. Accordingly, the Commissioner's decision should be affirmed.

FACTUAL BACKGROUND

On June 12, 2009, CMP submitted an application to the Department for approval of the MPRP under the Site Location of Development Act ("Site Law") and the Natural Resources Protection Act ("NRPA"), and for a Water Quality Certification.[1] The application discusses in

[1] Application of CMP for MPRP, Site Location of Development Act, Natural Resources Protection Act, and Water Quality Certification (June 2009).

detail the scope of and need for the proposed project, and explains how CMP has, among other things, met the standards for approval under both the Site Law and NRPA by limiting impacts to the greatest extent practicable.

Given the array of issues raised by the Fourniers' appeal, and because the MPRP application includes more than 6,000 pages, the following discussion begins by providing a general summary of the project, and then focuses in greater detail on the portion to be built in the vicinity of the Fourniers' property in Eliot.

I. Project Purpose and Need.

The MPRP is a project to upgrade Maine's bulk power transmission system. The purpose of the project is for CMP to make the improvements to its bulk power transmission system that are necessary to ensure compliance with federally mandated power transmission system standards, and to continue to provide safe, cost-effective, and reliable service to its customers.[2] To do this, CMP will build, rebuild, or re-rate transmission lines in approximately 360 miles of transmission line corridor, and build, expand, or upgrade 13 substations.[3] The project will be located in 13 counties and 78 municipalities,[4] and requires approvals from, among other bodies, the U.S. Army Corps of Engineers and the Maine Public Utilities Commission ("MPUC").[5]

The Maine transmission system is at the limits of its technical and physical ability to meet the growing electrical demand of Maine customers and the reliability standards established by the federal government. The vast majority of Maine's bulk power transmission system was

---

[2] MPRP NRPA Application at 2-2 (June 2009).
[3] MPRP Site Law Application at 1-1 (June 2009).
[4] For a map of the MPRP, see *id.* at Exhibit 1-1.
[5] The Army Corps application remains pending. The MPUC issued its approval for the MPRP, known as a Certificate of Public Convenience and Necessity, on June 10, 2010. *In re Central Maine Power Co., MPRP,* Docket No. 2008-255, Order Approving Stipulation. This includes the MPUC's finding of public need, which involves, by statute, *see* 35-A M.R.S.A. § 3132(6), consideration of factors such as public health and safety, scenic and recreational values, proximity to homes, and alternatives to construction of the line. MPUC Order Approving Stipulation at 18.

placed into service nearly 40 years ago.[6] Since that time, the patterns of available generation and customer load have changed considerably. For example, the population has become more concentrated in the southern part of the state, while the generation needed to serve that load, particularly with the closure of Maine Yankee, is now more distant and dispersed.[7]

At the same time that electricity use and generation patterns have changed, the federal mandatory reliability and security standards have become more stringent, including those related to transmission planning, which are administered by the North American Electric Reliability Corporation ("NERC"), the Northeast Power Coordinating Council, Inc., and the Independent System Operator for New England ("ISO-NE").[8]

II. Evaluation of Need and Alternatives to Meet that Need.

To evaluate the ability of the system to continue to serve Maine customers reliably and to meet required reliability and security standards, CMP, Bangor Hydro Electric, Maine Public Service Co., Northeast Utilities, and the Northern Maine Independent System Administrator, under the direction and supervision of ISO-NE, conducted a comprehensive, forward-looking needs assessment and transmission planning study, known as the Needs Assessment, of the bulk power system currently supporting the CMP and Bangor Hydro service territories. Using mandatory standards, the Maine grid was evaluated at forecast load levels for the year 2017. Planning standards require that the system be operated such that reasonable contingencies, including the unexpected loss of electrical generators or transmission lines, can occur without causing overloads, low voltages, instability, cascading outages, or loss of customer load. The Needs Assessment analyzed 18 different operating scenarios and approximately 257 different contingencies. Ultimately, the Needs Assessment identified significant reliability needs in

[6] MPRP Site Law Application at 1-1 (June 2009).
[7] *Id.*
[8] *Id.* at 1-1, n. 1 (discussing new standards).

Maine such that the bulk power system will fail by 2012 to meet the relevant planning standards designed to ensure adequate and safe electrical service, unless prompt remedial action is taken.[9] In sum, among the primary needs identified during system studies was bolstering the bulk transmission system in southern Maine.[10]

After identifying significant reliability needs, the MPRP evaluated both transmission and non-transmission solutions to ensure reliable operation of the grid. In this regard, CMP prepared two studies: (1) a Transmission Alternatives Assessment to develop transmission solution alternatives and select a preferred route, and (2) a Non-Transmission Alternatives ("NTA") Assessment to identify and evaluate other potential solutions. The Transmission Alternatives Assessment evaluated a variety of transmission options within the affected service territory to identify the optimal transmission response.[11] Finally, the NTA Assessment evaluated the opportunities for substituting non-transmission alternatives to the project, such as energy efficiency, demand-side management, and new generation.[12]

III. Project Description.

Based on these analyses, CMP designed the MPRP to include both transmission line and substation improvements. As noted above, the MPRP will include newly built, rebuilt, or re-rated transmission lines in approximately 360 miles of transmission line corridor. A guiding principle in the design of the MPRP is to utilize the existing transmission line corridors to the greatest extent practicable. This minimizes environmental, landowner, and societal impacts, and is the most efficient design to construct and maintain. As a result, approximately 98% of the

---

[9] MPRP NRPA Application at 2-6 (June 2009).
[10] *Id.* at 2-3 to 2-4.
[11] *Id.* at 2-12 to 2-20.
[12] In fact, as a result of the NTA Assessment, CMP determined that a transmission solution was not the best alternative for meeting the reliability need in the Portland/South Portland area, known as the South Portland Loop. Those needs can instead be met by energy efficiency and demand management measures, and thus CMP eliminated the South Portland Loop from the project. *Id.* at 2-21.

transmission line work will be co-located in or immediately adjacent to existing corridors, including near the Fourniers' home in Eliot.[13]

CMP then designed each individual transmission line segment of the MPRP to further avoid and minimize impacts. To determine individual utility structure locations, CMP used a computer model able to recognize the location of GIS and field-surveyed protected natural resources and prioritize their values (such that, for example, significant vernal pool habitat would be given a higher priority for avoidance than freshwater wetlands, all other factors being equal). The model then generated a design that avoided these resources to the extent practicable, which CMP's environmental team then individually reviewed and revised to further avoid and minimize impacts.[14] This resulted in a transmission design that avoids and minimizes impacts to sensitive resources to the maximum extent practicable.[15]

In addition, CMP will utilize numerous measures on all aspects of the MPRP to minimize construction impacts, such as, among many others, erosion and sedimentation controls, equipment mats, environmental inspectors, additional preconstruction wildlife surveys, rare plant relocation and planting, and installation of avian avoidance markers.[16] All told, CMP expects to spend more than $110 million on pollution controls.[17]

---

[13] MPRP Site Law Application at 1-6 (June 2009).
[14] MPRP NRPA Application at 2-33 to 2-37 (June 2009).
[15] CMP also considered underground cable design as a potential alternative, but determined that this technique would be impracticable. At roughly eight to ten times the cost of overhead lines, building underground lines is cost prohibitive. In addition, it is unlikely that the additional costs required to implement underground construction would be pooled among all of the ISO-NE grid users. When costs are pooled to the maximum extent, Maine ratepayers pay for only 8% of ISO-NE approved projects, with the rest of the region paying the remaining 92%. Because CMP was required to develop a cost-effective solution to obtain MPUC approval, a design that obligates CMP customers to unnecessary additional rate increases and project costs is untenable. Furthermore, underground construction introduces the potential for additional environmental impacts associated with excavating a trench along the length of the corridor, including within and across streams and wetlands, and greatly increases the potential for sedimentation during construction. Underground cable maintenance activities also may require driving excavation equipment down the transmission corridor, potentially requiring stream and wetland crossings, and excavation that could lead to sedimentation. *Id.* at 2-36 to 2-37.
[16] *Id.* at 2-36; *see also* NRPA Permit at 97-98, 101.
[17] MPRP Site Law Application at 3-1 (June 2009).

Finally, after extensive consultation with state and federal agencies, as well as numerous conservation groups, CMP has proposed a robust and multi-faceted compensation plan, including the restoration, enhancement, and preservation of 3,345 acres of conservation land and an in-lieu fee contribution of more than $1.5 million to compensate for unavoidable impacts.[18] Although the MPRP encompasses a large geographic area, its alterations to protected natural resources are relatively small, discrete, and distributed throughout the project area. The compensation plan, however, provides for similar functions and values for the altered portions of the resources on far larger parcels. The cumulative environmental benefits of these larger compensation parcels outweigh any detriment caused by the smaller, isolated, and often temporary impact areas.

The portion of the MPRP proposed in the vicinity of the Fourniers' property, 16 High Meadow Farm Road in Eliot, will be located in an existing CMP corridor, known as Segment 27, that runs through Kennebunk, Wells, North Berwick, South Berwick, and Eliot.[19] The eastern edge of the Fourniers' property is subject to an easement, sold to CMP by a previous owner in 1964, well before the Fourniers acquired the property in 2000.[20] That easement gives CMP the right to build, maintain, and repair a 225-foot wide transmission line corridor over the Fourniers' land.[21] When the Fourniers bought the property, Segment 27 was already developed with two 115 kV transmission lines. Of these existing transmission lines, the one that is closest to the Fourniers' house, known as Section 197, is built on single pole structures that are typically 75

---

[18] For a summary of the compensation plan, see MPRP Site Law & NRPA Application at Exhibit 13-2 (revised Jan. 2010).

[19] For a map of the CMP corridor showing the location of the Fourniers' house, see Exhibit A. MPRP Site Law Application Appendices & NRPA Application Plans, Map: S7-27-47 (revised Jan. 2010).

[20] The Fourniers' deed, attached as Exhibit B, references a plan that clearly shows the location of the CMP easement over their property. The deed and plan are not part of the agency record, but are publicly available in the York County Registry of Deeds and the Board may therefore take official notice of them. 5 M.R.S.A. § 9058(1) (agencies may take official notice of any facts of which judicial notice may be taken, as well as general, technical, or scientific matters within their specialized knowledge); M.R. Evid. 201(b) (courts may take judicial notice of facts "capable of accurate and ready determination by resort to sources whose accuracy cannot reasonably be questioned").

[21] For a copy of CMP's easement over the Fourniers' property, see Exhibit C. MPRP Site Law Application, included on CD filed in inside cover (June 2009); *see also id.* at Exhibit 2-1, Table B (providing summary table of real estate documents).

feet tall.[22] The other existing line, known as Section 250, is located on the other side of corridor and built on H-frame structures that are typically 45 feet tall.[23]

The MPRP near the Fourniers' property will consist of the construction of a new 345 kV transmission line, to be known as Section 3022, and the relocation and rebuilding of Section 250.[24] The 345 kV line will be built on single pole structures that are typically 95 feet tall, while the 115 kV line will be built on single pole structures that are typically 75 feet tall.[25] Both transmission lines will be built within the existing corridor, and so no expansion of the corridor will be required.[26] Also, both of these lines will be located to the southeast of the existing Section 197 line, and thus will be on the far side of the corridor from the Fourniers' house. In particular, the 345 kV line, which will be on the tallest structures, will be the line that is farthest away from the Fourniers' house.

The portion of the project located on the Fourniers' property has no protected natural resources or other sensitive habitat,[27] including any significant vernal pool habitats and intermediate or high value deer wintering areas,[28] and is not in a wellhead protection area or above a mapped sand and gravel aquifer.[29]

IV. Review and Approval by the Commissioner

After a thorough review, on April 5, 2010, the Commissioner issued a 117-page order, with 31 special conditions, approving the MPRP. *See In re:* Central Maine Power Co., MPRP,

---

[22] MPRP Site Law & NRPA Application, Sheet S1-E-27-9 (revised Oct. 2009) (providing "existing" and "proposed" cross-sectional views of the corridor), attached hereto as Exhibit D.
[23] *Id.*
[24] MPRP Site Law Application at 1-9, 1-12 (June 2009).
[25] MPRP Site Law & NRPA Application at 6-141 (revised Oct. 2009).
[26] Exhibit D.
[27] Exhibit A.
[28] MPRP Site Law & NRPA Application at Map: SVP-27 Index (revised Oct. 2009).
[29] *Id.* at Map: S15-27-6.

L-24620-26-A-N (April 5, 2010) (the "Permit"). The Commissioner's decision, as required by the applicable statutes and rules, specifically addresses numerous aspects of the project, including impacts to scenic and aesthetic resources, buffers, groundwater, and wildlife habitats, among many others.

The Fourniers then filed this appeal with the Board on May 4, 2010, challenging the Commissioner's decision, seeking to introduce supplemental evidence, and requesting a hearing. CMP responded by arguing that the Fourniers' proffered supplemental evidence was inadmissible.[30] The Board Chair then ruled that the supplemental evidence filed as attachments to the Fourniers' appeal was inadmissible and cautioned in addition that it would not review compliance with local ordinances or Department orders on other projects. CMP now files this timely response to all of the substantive issues raised in the appeal.

ARGUMENT

As an initial matter, the Fourniers' have failed to follow the requirements in the Department's rules regarding the content of their appeal, thus making it difficult to understand at times the precise nature of their arguments. Chapter 2 provides that the written notice of appeal "must include," among other things, "the findings, conclusions or conditions objected to or believed to be in error, the basis of the objections or challenge, and the remedy sought." 06 096 CMR 2(24)(B)(2). The Fourniers have not identified any findings, conclusions, or conditions that they consider erroneous, there is little explanation of why they believe the Commissioner erred, and they do not suggest an appropriate remedy.

[30] In addition, the Fourniers have also requested a public hearing. Fournier Appeal at 18. The Board Chair ruled on June 18, 2010, that the Board would take up this issue at oral argument. CMP contends that the Fourniers do not meet the standards in the Department's rules for a public hearing, which are to be held only where there is "credible conflicting technical information regarding a licensing criterion and it is likely that a public hearing will assist the decision maker in understanding the evidence," 06 096 CMR 7(B), and incorporates by reference the discussion of this issue in its May 21, 2010, filing.

These requirements are not mere technicalities, or simply a case of form over function. They serve to identify for the Board and other parties the precise nature of the dispute. This allows the Board to analyze the issues and reach a thorough, concise decision. In their absence, the Board and other parties are left to make assumptions about the Fourniers' arguments. Therefore, to focus the discussion, we will attempt to identify, based on the issues that the Fourniers have raised, the specific findings or conclusions in the permit that appear to be at issue, the applicable regulatory standards, and the record evidence that we believe supports the Commissioner's decision.

I. Visual Impacts

The Fourniers' primary argument appears to be that the visual impacts of the project on their property, the Eastern Trail, and nearby roads are unreasonable. They contend variously that the new lines to be built as part of the MPRP will become the dominant view, that CMP should be required to plant trees to buffer the project, and that the single-pole structures proposed by CMP are "obnoxious." *See* Fournier Appeal at 5-9, 17.

As discussed in the Commissioner's decision, *see* MPRP Permit at 17, there are two visual standards that CMP must meet. First, NRPA requires an applicant to show that a project will not unreasonably interfere with existing scenic or aesthetic uses. 38 M.R.S.A. § 480-D(1). The Department's review under this standard focuses on whether a project will unreasonably interfere with the general public's visual enjoyment and appreciation of scenic resources, which are defined as "public natural resources or public lands visited by the general public in part for the use, observation, enjoyment, and appreciation of natural or cultural visual qualities." 06 096 CMR 315(4) & (5)(H). The visual standard in NRPA, therefore, does not apply to impacts on private homes, such as that owned by the Fourniers, but does apply to public areas, such as the Eastern Trail.

216

Second, the Site Law requires an applicant to show that a project will not adversely affect scenic character. 38 M.R.S.A. § 484(3). Specifically, the Department's review under this standard focuses on whether the project will have an "unreasonable adverse effect on the scenic character of the surrounding area." 06 096 CMR 375(14)(B).

To address the visual impacts of the MPRP, CMP submitted a visual impact analysis ("VIA") of more than 300 pages, prepared by Terrence J. DeWan & Associates, which addresses each individual transmission line segment, including Segment 27 near the Fourniers' property.[31] The VIA follows the methodology established by the Department in Chapter 315. This involved gathering field data, including taking photographs; reviewing sources of data from, among other resources, municipal comprehensive plans, the Land for Maine's Future program, the Maine Department of Conservation, and the National and State Registers of Historic Places; and creating an inventory of scenic resources within the viewshed of the project.[32] CMP's consultant then prepared a visual assessment for each transmission line segment and substation considering, as required by Chapter 315, landscape compatibility, scale contrast, and spatial dominance, and focusing on impacts to residents, local motorists, the recreating population, and the working population.[33]

CMP also explained in its application the measures taken to mitigate potential adverse visual impacts. The primary mitigation measure is co-locating the project, to the greatest extent practicable, within or immediately adjacent to existing corridors.[34] This limits the amount of additional clearing required for the project and co-locates development in areas where similar structures already exist. As noted above, CMP proposes to build one 345 kV transmission line

[31] MPRP Site Law & NRPA Application at 6-1 (revised Oct. 2009).
[32] *Id.* at 6-2 to 6-4.
[33] *Id.* at 6-6 to 6-10.
[34] *Id.* at 6-10.

and relocate and rebuild a 115 kV line within the existing corridor near the Fourniers' property. To do this, CMP has had to design this portion of the project on the more costly single pole structures, rather than the more space-consumptive H-frame structures.[35] As a result, the corridor will not need to be expanded, and both lines will be located on the far side of the existing Section 197 115 kV line, when viewed from the Fourniers' home.[36] The poles in this area will be self-oxidizing steel poles, which ensure that they will weather to a dark brown that better blends in with the surroundings.[37]

The VIA catalogs numerous foreground views (defined as being up to ½ mile in distance) from locations along Segment 27, including from High Meadow Farm Road, which is the road that the Fourniers live on.[38] The VIA then describes the potential impacts on residences along Segment 27 as follows:

> There are approximately 100 homes that are located directly adjacent to, or may have a view of, Segment 27. The majority are single family homes on individual lots in rural settings. For the most part, the homes are oriented away from the transmission corridor. In most locations homeowners have maintained a sufficient amount of woods on their properties to provide an adequate buffer between themselves and Segment 27. In a few locations (e.g., Bills Lane in Wells, Linscott Road in North Berwick, and Knights Pond Road in South Berwick) open fields allow for greater visibility of the existing transmission corridor. . . . In general, there should be minimal visual impact to homeowners in wooded settings resulting from the Segment 27 activities. Where homes are located in open field settings or adjacent to cleared parcels with views of the transmission corridor, Segment 27's changes in scale and material should result in moderate to strong visual impact.[39]

The VIA also specifically addresses the potential visual impact of the project on the Eastern Trail, explaining that the Trail in this area has not yet been built, and is temporarily

---

[35] MPRP NRPA Application at 2-24 (June 2009) (reconfiguring design to single pole structures reduces landowner conflicts, but increases costs up to $1 million per mile per transmission line).
[36] Exhibit A.
[37] MPRP Site Law & NRPA Application at 6-148 (revised Oct. 2009).
[38] *Id.* at 6-143. For representative photographs of the area, *see* MPRP Site Law Application at Exhibit 6-4, pages 113-114 (June 2009).
[39] MPRP Site Law & NRPA Application at 6-146 to 6-147 (revised Oct. 2009) .

located on roadways. If the trail is built, the project will have "slight to moderate" visual impacts on the trail, in part because the new 345 kV line will be located on the opposite side of the corridor and the substantial vegetation that buffers views.[40]

The VIA concludes that the changes along Segment 27 "should not unreasonably interfere with existing scenic and aesthetic uses of scenic resources within its viewshed and should not have an unreasonable adverse effect on the scenic character of the surrounding area."[41]

In Finding 6 of the Permit, the Commissioner discussed at length the potential visual impacts of every individual segment of the transmission line and all of the substations. MPRP Permit at 17-42. Specifically with regard to Segment 27, the Commissioner found that the visual impacts of the project would not be unreasonable, provided that CMP plants or enhances and maintains several roadside buffers at key roadway crossings. *Id.* at 29-30. Accordingly, the Commissioner concluded that CMP had met the visual standards of both the NRPA and the Site Law. *Id.* at 37 (finding that impacts are "not anticipated to unreasonably interfere with existing scenic and aesthetic uses of scenic resources" and are "not anticipated to unreasonably affect the scenic character of the surrounding area"); *see also id.* at 83, 85 (making statutory findings that the project meets the visual standards for both NRPA and the Site Law).

The Fourniers do not present any evidence to contradict either the VIA prepared by CMP or the Commissioner's conclusion that visual impacts will not be unreasonable. In fact, the Fourniers' primary focus appears to be on the visual impacts from the existing Section 197 project, *see* Fournier Appeal at 6-8 (regarding clearing for the Section 197 project), which have already been ruled inadmissible by the Board's Chair. Moreover, the Fourniers do not make any

---

[40] *Id.* at 6-144.
[41] *Id.* at 6-150.

attempt to reconcile the fact that they purchased their property subject to a CMP easement for a transmission line corridor that was already developed with two transmission lines, or that they maintain their property as a lawn and have a swimming pool, rather than allowing vegetation to grow outside of the corridor that could screen the project. In sum, the Fourniers' arguments about visual impacts should be rejected, and the Commissioner's decision on this point affirmed.

II. Buffers

The Fourniers next assert that CMP should be required to provide additional natural buffer strips between the project and their house. *See* Fournier Appeal at 4-6. It is difficult to tell, however, whether the Fourniers are concerned with buffering the impacts of the Section 197 project, which has already been built and is not at issue here, or the MPRP project, or, for that matter, whether they are concerned with buffering for the protection of wildlife, visual impacts, or both.

In any event, as the Commissioner explained in the Permit, "[i]n its analysis of whether an applicant has made adequate provision for fitting a proposed project harmoniously into the existing natural environment . . . the Department considers whether natural buffer strips are necessary to protect wildlife and water quality and as visual screens to protect existing uses." NRPA Permit at 53. Pursuant to Chapter 375 of the Department's rules, the scope of this analysis includes relevant evidence such as whether water bodies near a project will be adequately protected from sedimentation and surface runoff; whether wildlife will have adequate space to move between important habitats; and whether buffers would shield against unsightly developments and lighting. 06 096 CMR 375(9)(B).

With respect to buffering for environmental reasons, MPRP will be required to provide more buffering than any other transmission line project in CMP's system. CMP stated in its application:

> All MPRP transmission corridors will be continuously vegetated with herbaceous plants and shrubs . . . . Buffers bordering streams and rivers will be protected and maintained by selective clearing during construction and reduced cutting of vegetation during maintenance of the transmission line. All tree species capable of growing into the conductor safety zone must be removed from the proposed buffers during construction, and prevented from re-establishing during periodic scheduled vegetation maintenance operations.[42]

CMP submitted a vegetation maintenance plan ("VMP") as part of its application that discusses in detail how CMP manages vegetation on its corridors, addressing issues such as vegetation management in natural resource areas, herbicide applications, invasive plant monitoring, and the prevention of spills of petroleum products.[43] The VMP is intended to balance multiple, and sometimes competing, factors, such as conserving sensitive natural resources and ensuring that vegetation does not grow tall enough to contact the conductors and cause outages or create a safety hazard.

The Department reviewed CMP's VMP and made multiple changes to provide even greater protection of human health and the environment. NRPA Permit at 54. As a result, CMP will be required to implement an amended VMP, included as a condition of approval in the Permit. *Id.* at 55.

Among the numerous provisions in the amended VMP related to buffers are the following, all of which are new to CMP's vegetation management program designed for this project:

- CMP must retain riparian natural buffers within 100 feet of the following types of waterbodies: Class AA and A rivers; outstanding river segments; and rivers, streams, and brooks that contain threatened or endangered species. For all other rivers, streams, and brooks, CMP must retain a 25-foot natural buffer. NRPA Permit at 98.

- Initial clearing of capable species within a riparian buffer or rare plant community must be done during frozen conditions whenever practicable, and if not practicable, must follow the recommendations of the third-party inspector to minimize disturbance, such as through the use of designated travel lanes. NRPA Permit at 99, 102.

---

[42] NRPA Site Law & NRPA Application at 10-1 (revised Oct. 2009).
[43] MPRP Site Law Application at Exhibit 10-1 (June 2009).

- Clearing and non-emergency vegetation maintenance in significant vernal pool habitats and inland waterfowl and wading bird habitats must be done during frozen conditions whenever practicable, and if not practicable, must be done with hand-cutting or "reach-in" techniques to limit disturbance to the resource. NRPA Permit at 100, 101.

- CMP must develop an invasive species monitoring plan to be approved by the Department prior to the start of construction. NRPA Permit at 93.

With regard to visual impacts, which have been addressed at length above, CMP has already designed Segment 27 with the more expensive single pole construction so that the existing corridor can accommodate all three transmission lines without being expanded. For purposes of both public and worker safety and to prevent outages, CMP cannot allow capable species from growing in its corridors, and thus it is not possible to add a vegetated screen of trees for the Fournier property within the corridor.[44] Moreover, the Fourniers maintain their property between their house and the corridor as open lawn, with a swimming pool, and thus have apparently chosen not to provide a visual screen of their own. Additionally, the two new lines will be built on the opposite side of the corridor from the Fourniers' house, and thus the project will be no closer than what already exists.

The Commissioner addresses buffering in Finding 10 of the Permit, explaining at length the need for roadside buffering and the changes required in the VMP, and concluding that CMP "made adequate provision for buffer strips," provided that it implements the amended VMP and develops an invasive species monitoring plan prior to construction of the project. NRPA Permit at 55. Regardless of the precise nature of the Fourniers' arguments about buffers, the Commissioner's decision on this point is amply supported by the record and should be affirmed.

---

[44] *Id.* at 10-2.

III. Groundwater Quality

The Fourniers also contend that CMP has not made any provisions to protect either a well water supply area on their property or a nearby brook that they believe supplies that well. *See* Fournier Appeal at 2. The Fourniers do not identify the permitting standard that they believe CMP failed to meet, or why they feel that the MPRP might harm their well water. Given that there will not be any water withdrawals as a result of the project within the vicinity of the Fourniers' property, CMP assumes that the Fourniers' are raising here a concern about groundwater quality.

Pursuant to the Site Law, CMP is required to demonstrate that the MPRP "will not pose an unreasonable risk that a discharge to a significant ground water aquifer will occur." 38 M.R.S.A. § 484(5). In addition, the Department's rules require that the project cannot have "an unreasonable adverse effect on ground water quality." 06 096 CMR 375(7)(B). Similarly, under the NRPA, CMP must show that the project will not violate any state water quality law, including with respect to groundwater. 38 M.R.S.A. § 480-D(5).

CMP submitted evidence in its application to demonstrate that the MPRP would not unreasonably impact groundwater quality, including identifying potential threats, prevention and protection measures, and particular groundwater resources associated with the project.[45] Among other things, CMP explained that it protects groundwater during construction and maintenance activities by implementing spill plans that address the prevention, control, and clean-up of potential spills of substances such as oil, gasoline, and hydraulic oil. In addition, CMP will be required to follow stringent new standards regarding herbicide applications on its corridors, including prohibitions on storing, mixing, or loading herbicides within 100 feet of wetlands or surface waters; setbacks ranging from 100 to 400 feet that bar the use of herbicides within the

[45] MPRP Site Law Application at 15-1 to 15-7 (June 2009).

vicinity of known private wells or certain surface waters; and a mandate that herbicides be applied only when wind speeds do not exceed 15 miles per hour. MPRP Permit at 94-96. CMP also provided extensive information about the location of sand and gravel aquifers and public water supplies along the project route. Notably, no such resources are located in the vicinity of the Fourniers' property.[46]

The Commissioner discussed the issue of groundwater impacts at length in Finding 13 of the Permit, specifically recognizing the threat that various substances pose to public health if they are discharged to groundwater, and noting that the Department's Division of Environmental Assessment recommended that CMP be required to follow the herbicide and spill management standards in the amended VMP. MPRP Permit at 66-67.

In granting the permit, the Commissioner concluded:

> The proposed development will not pose an unreasonable risk that a discharge to a significant groundwater aquifer will occur provided that 1) the applicant follows the standards for herbicide application and spill management outlined in the Amended VMP, 2) submits copies of individual SPCC plans for substations and any SPCC plan or equivalent document developed by a construction contractor, and 3) prior to construction on any property containing existing water supply wells and waste water disposal systems, the applicant shall provide an inventory of all existing wells, disposal systems and similar on-site utilities on the affected properties, and a description of measures the applicant will take to abandon any well or wastewater disposal systems, as discussed in Finding 13.

NRPA Permit at 85-86.

The Fourniers have presented no evidence to contradict the Commissioner's conclusion that the MPRP will not unreasonable adversely impact groundwater supplies, and thus, given the evidence to the contrary supplied by CMP, the Commissioner's conclusion on this point should be affirmed.

---

[46] *Id.* at 15-6 (June 2009) (listing groundwater resources for Segment 27); MPRP Site Law Application Appendices & NRPA Application Plans, Map: S15-27-6 (revised Jan. 2010) (showing that Fournier property is not in a wellhead protection area or above a mapped sand and gravel aquifer).

224

IV. Wildlife and Wildlife Habitats

The Fourniers next briefly assert that the project threatens wildlife, evidently through the placement of access roads. *See* Fournier Appeal at 2-3 (stating "we appeal the access routes . . . for the purpose of not caus[ing] the wildlife, in particular the deer, wild turkeys, fox, and other wildlife that depend on survival by use of the natural resource on our land and nearby").

CMP is required to demonstrate that its project will not have an unreasonable adverse impact on wildlife and wildlife habitats. Specifically, NRPA requires a finding that the activity "will not unreasonably harm any significant wildlife habitat, freshwater wetland plant habitat, threatened or endangered plant habitat, aquatic or adjacent upland habitat, travel corridor, freshwater, estuarine or marine fisheries or other aquatic life." 38 M.R.S.A. § 480-D(3). In addition, the NRPA regulations require CMP to show that the project will not unreasonably harm any significant wildlife habitat, such as a significant vernal pool habitat, intermediate or high value deer wintering area, or inland waterfowl and wading bird habitat. 06 096 CMR 335(3)(C). Under the Site Law, CMP is similarly required to show that the project will not have an unreasonable adverse effect on wildlife and fisheries. 06 096 CMR 375(15).

As noted above, there are no protected natural resources or other sensitive resources within the project area on the Fourniers' property. CMP submitted voluminous materials in its application demonstrating that its impacts to wildlife and wildlife habitats will not be unreasonable, including the results of intensive field work along approximately 360 miles of transmission line corridor to identify, catalog, and map resources such as wetlands; rivers, streams, and brooks; significant vernal pool habitat; inland waterfowl and wading bird habitat;

intermediate and high value deer wintering areas; and bald eagle nest sites.[47] CMP also explained in detail how it proposed to avoid and minimize impacts, and to compensate for unavoidable impacts.[48] CMP also discussed how it proposes to build the temporary access ways needed to construct the project, explaining how it avoided and minimized impacts to natural resources wherever practicable, primarily through proper location of the access ways themselves. Except during frozen conditions, when such measures are unnecessary, CMP has committed to use construction mats or bridges to cross wetlands and streams to avoid and minimize impacts.[49] It will also restore areas disturbed by temporary access ways by re-grading the ground surface where necessary to achieve pre-development contours, and then re-seeding and stabilizing disturbed soils.[50]

The Commissioner's decision discusses the impacts of the project on wildlife resources throughout the Permit, including in Finding 7 on wildlife, Finding 9 on unusual natural areas, and Finding 18 on wetland impacts. NRPA Permit at 42-53, 69-83. The extensive analysis covers everything from fisheries resources to several types of significant wildlife habitats to rare, threatened, and endangered plant species, and requires CMP to implement multiple measures to protect wildlife and wildlife habitat, including:

- Implementation of the amended VMP, which, as discussed above, provides extensive protections for multiple sensitive resources, including streams, significant vernal pool habitats, and inland waterfowl and wading bird habitats, through measures such as regulating the seasonality of clearing activities, requiring erosion and sedimentation controls, and imposing new restrictions on the use of herbicides. NRPA Permit at 43.

---

[47] MPRP Site Law Application at § 7 (June 2009) (discussing wildlife and fisheries); MPRP Site Law & NRPA Application at § 7 (revised Jan. 2010) (updating same); *see also, e.g.*, *id.* at Attachment 12 (wetland functions and values assessment). Additionally, the Department took what CMP believes is the unprecedented step of hiring a third-party consultant to conduct an independent field review of 80% of CMP's field work, thus ensuring the accuracy of the natural resource data. NRPA Permit at 44.

[48] MPRP Site Law & NRPA Application at Attachment 2 (revised Oct. 2009) (providing the alternatives analysis discussing avoidance and minimization); MPRP Site Law & NRPA Application at Attachment 12 (revised Jan. 10, 2010) (providing compensation plan).

[49] MPRP NRPA Application at 7-4 (June 2009).

[50] *Id.* at 7-5 to 7-6.

- Restrictions on the use of temporary culverts for access roads, including new requirements to embed culverts six inches into the soil and size culverts to 1.2 times the bank full width. NRPA Permit at 44.

- A first-time requirement to consider certain vernal pools as significant vernal pool habitats even when CMP could not obtain access rights to survey the entire pool depression because a portion of the depression was located on an abutter's property. NRPA Permit at 45.

- Installation of aviation marker balls or similar protections on lines located near bald eagle habitat. NRPA Permit at 49.

- A requirement to develop and implement a plan to avoid and minimize the incidental take of endangered and threatened species, including an incidental take plan for black racer snakes. NRPA Permit at 49-50.

- Compensation for unavoidable impacts, including for the temporary access ways, with a compensation plan that may well be the largest such plan ever presented in Maine, covering the restoration, enhancement, and preservation of 3,345 acres and an in-lieu fee contribution of more than $1.5 million. NRPA Permit at 72-83.

Thus, based on the overwhelming record evidence regarding impacts to wildlife and wildlife habitat, particularly from access ways, and the lack of anything to the contrary from the Fourniers, the Commissioner's decision on this point should be affirmed.

V. Title, Right, or Interest

The Fourniers also contend that the information demonstrating CMP's title, right, or interest in the project was somehow inadequate, stating that they "have the right to know what CMP's easements are and where their land is," and asking that "those real estate records need to be made available to the public." Fournier Appeal at 16-17. The precise nature of their argument, however, is unclear because CMP has provided exactly this information.

CMP agrees that such records should be public, and that it is required as part of its application to demonstrate adequate title, right, or interest to "all of the property that is proposed for development." 06 096 CMR 2(11)(D). The Fourniers' appear, however, to believe that some of the easements and other records that CMP needs for the project are somehow redacted or

confidential. This is incorrect. CMP has submitted all of the documents demonstrating title, right, or interest in its application, which is a public document and was available for the Fourniers to review at the Department offices.[51] CMP does not believe that any of these documents are redacted. In fact, the majority of these documents are already public records at the various Registries of Deeds around the State.

The Maine Supreme Judicial Court has explained that to have title, right, or interest, an "applicant for a license or permit to use property in certain ways must have 'the kind of relationship to the . . . site,' that gives him a legally cognizable expectation of having the power to use that site in the ways that would be authorized by the permit or license he seeks." *Murray v. Town of Lincolnville*, 462 A.2d 40, 43 (Me. 1983) (citing *Walsh v. City of Brewer*, 315 A.2d 200, 207 (Me. 1974)). The Commissioner correctly concluded that the information submitted by CMP "is credible and demonstrates a right to the reasonable use of the properties and adequate duration and terms for that use for the proposed project and its associated uses sufficient for the processing of this application." NRPA Permit at 10.

Thus, there is nothing that prevents the Fourniers from, in their words, knowing "what CMP's easements are and where their land is." They were free to review CMP's application, including regarding title, right, or interest, just like any other member of the public. Accordingly, this argument should be rejected, and the Commissioner's finding upheld.

[51] MPRP Site Law Application at 2-1 (including CD jacket attached to inside cover of volume 1) (June 2009).

228

VI. Slash Law

The Fourniers next argue that the Commissioner erred by failing to require CMP to comply with the Slash Law, which they claim prohibits CMP from leaving slash[52] in the utility corridor. *See* Fournier Appeal at 9-10.

The Slash Law is enforced by the Maine Department of Conservation, not the Department of Environmental Protection. 12 M.R.S.A. § 9338. There is no requirement in either the Site Law or NRPA that CMP demonstrate compliance with the Slash Law *per se*. CMP did, however, agree to comply with provisions in the VMP regulating slash to ensure that slash does not have an unreasonable impact on sensitive natural resources. *E.g.*, NRPA Permit at 100 (no slash to be left within 100 feet of a significant vernal pool depression).

In any event, the project in the vicinity of the Fourniers' property will be built entirely within the existing, maintained right-of-way. Accordingly, there will be limited slash generated during construction, which will be primarily immature capable species that have grown up since the last clearing activities. Any such slash will be hauled away, burned, or chipped, and not left on the ground, as required by the Slash Law for construction activities. 12 M.R.S.A. § 9333(2). Furthermore, in the future, the corridor will be managed on a four-year vegetation management cycle, designed to ensure that vegetation cannot grow tall enough to interfere with the transmission lines. Any slash generated by maintenance activities will be managed according to the provisions of the Slash Law regarding maintenance work, which do allow for some slash to remain on the ground. 12 M.R.S.A. § 9333(3)(A) ("slash with a diameter of 3 inches or less may be left in piles on the ground within the maintained portion of the right-of-way").

---

[52] The term "slash" means "branches, bark, tops, chunks, cull logs, uprooted stumps and broken or uprooted trees and shrubs left on the ground as a result of logging, right-of-way construction or maintenance and land clearance." 12 M.R.S.A. § 9331.

In sum, CMP will comply with both the Slash Law itself and the provisions of the amended VMP regarding management of slash generated by the construction and maintenance of the MPRP. The Fourniers' only arguments to the contrary on this point are inadmissible (and inaccurate) references to the Section 197 project. The Commissioner's decision should be affirmed.

VII. Third-Party Inspectors

The Fourniers also argue that the Commissioner has erred by failing to require more third-party inspectors for the project. *See* Fournier Brief at 13. A third-party inspector is charged with ensuring that construction and stabilization activities comply with the requirements of a permit, that decisions made in the field about issues such as erosion control and natural resource protection are based on sound engineering and environmental factors, and that contractors and the Department staff communicate effectively about any changes to the development plans. MPRP Permit at 111 (summary of third-party inspection program).

The Commissioner's decision obligates CMP to retain at least four third-party inspectors to monitor erosion control and the protection of natural resources on the project site during construction. MPRP Permit at 88. In addition, the Commissioner provided that any single inspector would be limited to working on no more than 100 miles of transmission line corridor and four substations. *Id.*

There is no permitting standard in the Site Law or NRPA that dictates how many third-party inspectors are necessary for a particular project, or even that requires third-party inspectors at all. This is, therefore, an issue for the Commissioner's discretion, to assist the Department staff in monitoring compliance with the conditions of approval. As such, and given that the Fourniers fail to suggest why the Commissioners' decision on this point is erroneous, the Fourniers' argument on this point should be rejected.

230

VIII. Property Value

The Fourniers also contend that the project will devalue their property. Fournier Appeal at 1, 4, 9. There is, however, no permitting standard under either the Site Law or NRPA that requires an applicant to demonstrate that a project will not adversely affect property values, and, in fact, the Maine Supreme Judicial Court has held that such a provision in an early version of the Site Law was unconstitutional. *In re Spring Vally Development*, 300 A.2d 736, 751 (Me. 1973) (striking down as unconstitutional a provision of the Site Law requiring that property values not be unreasonably affected, concluding "[w]e consider the addition of this dubious criterion constitutionally barred and void"). Accordingly, the Commissioner properly declined to impose a permitting standard regarding property value, and that decision should be upheld.

CONCLUSION

Based on the foregoing, CMP respectfully requests that the Board affirm the Commissioner's decision to grant approval for the MPRP.

Dated: July 8, 2010

Thomas R. Doyle

Thomas R. Doyle
Brian M. Rayback

Pierce Atwood LLP
One Monument Square
Portland, Maine 04101
(207) 791-1100

Attorneys for Respondent Central Maine Power Co.

Licensee Exhibit A

230

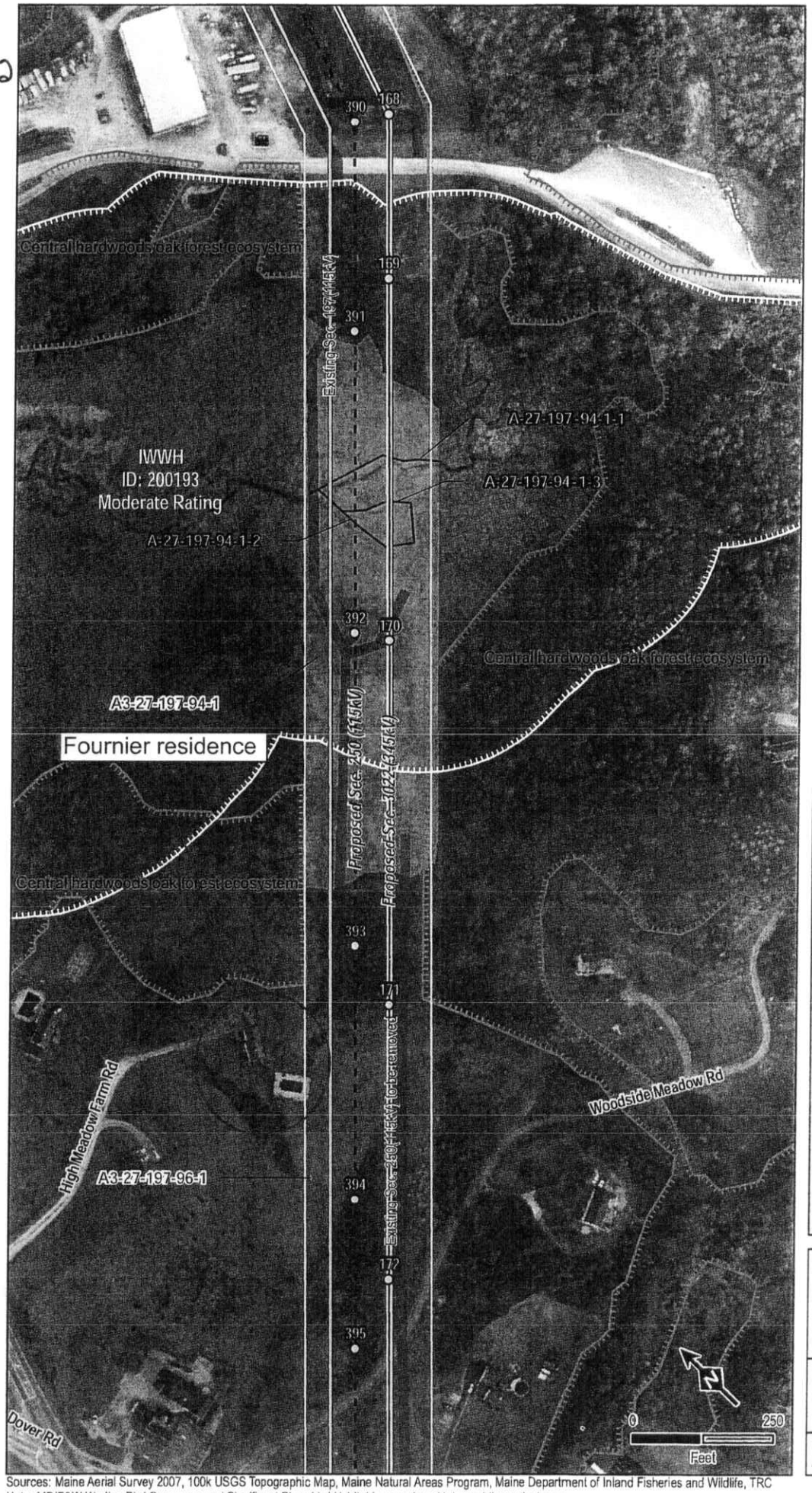

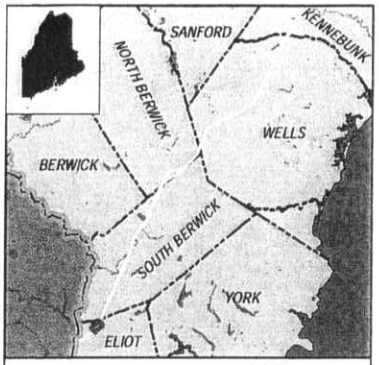

Segment 27

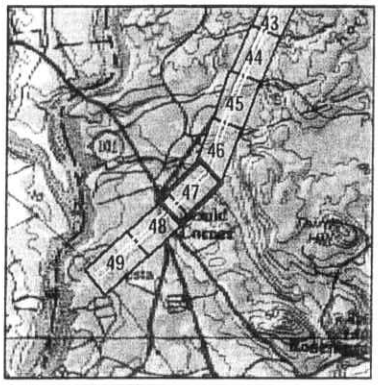

Legend

- MPRP Project Area
- Existing Transmission Line
- Transmission Line to be Removed
- Proposed Structure
- New 345kV Transmission Line
- New 115kV Transmission Line
- Rebuild Existing 345kV Transmission Line
- Rebuild Existing 115kV Transmission Line
- Rerate 345kV Transmission Line
- Rerate 115kV Transmission Line
- Proposed Access
- Proposed Area of Tree Clearing

Proposed Structure #

Proposed Section #

Sensitive Habitat

- Wetland
- Stream
- Surface Water
- Amphibian Breeding Area
- Natural Vernal Pool
- Significant Vernal Pool
- Potentially Significant Vernal Pool
- Rare Plant Location
- Waterfowl Wading Bird Habitat (IWWH)
- Tidal Waterfowl Wading Bird Habitat
- RTE Species Identifed in Area
- Deer Wintering Area (DWA)
- MNAP Unusual Natural Areas
- Bald Eagle Habitat
- Osprey Nest

MAINE POWER RELIABILITY PROGRAM

A CENTRAL MAINE POWER COMPANY PROGRAM

Natural Resource Maps

Map: S7-27-47

14 Gabriel Dr.
Augusta, ME 04330

TRC

Created:
1/6/2010

Sources: Maine Aerial Survey 2007, 100k USGS Topographic Map, Maine Natural Areas Program, Maine Department of Inland Fisheries and Wildlife, TRC
Note: MDIF&W Wading Bird Occurence and Significant Shorebird Habitat Layers do not intersect the project area

Licensee Exhibit B

234

BK 9939 PG 304

WARRANTY DEED

010985

KNOW EVERYONE BY THESE PRESENTS, That

Cathy G. Barnhorst

of PO Box 62, Eliot, Maine 03903

for consideration paid, grant to **David R. Fournier and Mary E. Fournier** ,

of 7 Crescent Court, South Berwick, Maine 03908

with **warranty covenants**

A certain lot of land, together with the buildings and improvements thereon located on the easterly side of Route 236, but not adjacent thereto, in the Town of Eliot, County of York and State of Maine, being shown as B2 on a plan title "Plan of Lands of Timothy J. Rieser TJR Land Holdings LLC and TJR Associates LLC Route #236 & 101 (Goodwin Road) Eliot, Maine" dated 5/5/908 by Civil Consultants and recorded at the York County Registry of Deeds in Plan Book 241, Page 18 and being more particularly bounded and described as follows:

Beginning at a 5/8" diameter iron rebar with a plastic identification cap to be set in the north sideline of a 50 foot proposed right of way running from Route 236 along land formerly of Timothy J. Rieser, said rebar marking the northwesterly corner of the parcel described herein, and thence proceeding North 76° 26' 06" East a distance of 288.12 feet along the southerly sideline of land formerly of Timothy J. Rieser to a 5/8" diameter iron rebar 8 inches tall set in a stone pile, which point marks the northeasterly corner of the parcel herein described and other land formerly of TJR Associates LLC; thence turning and proceeding South 10° 31' 03" East a distance of 538.27 feet along said other land of TJR Associates LLC to a 5/8" diameter iron rebar set near the southeasterly sideline of an easement to Central Maine Power as described in a deed recorded at Book 1620, Page 291 at the York County Registry of Deeds; thence turning and proceeding South 81° 59' 00" West a distance of 287.99 feet along other land now or formerly of TJR Associates LLC to a 5/8" diameter iron rebar set at other land now or formerly of TJR Land Holdings LLC; thence turning and running North 10° 31' 03" West for a distance of 510.39 feet to the point of beginning.

containing 3.4 acres.

Meaning and intending to convey the same premises conveyed to Cathy G. Barnhorst by deed of Great Island, LLC dated June 14, 1999 and recorded at Book 9524 Page 350, York County Registry of Deeds. See also Corrective Deed from Great Island LLC to Cathy G. Barnhorst dated and recorded herewith.

The above described premises are conveyed together with the benefit of a 50 foot right of way easement, to be used to gain entrance to and exit from the easterly sideline of Route 236 and Lots A, B1 and B2 as shown on said plan of Lands of Timothy J. Rieser recorded in the York County Registry of Deeds Plan Book 241, Page 18. Said right of way may be used on foot or with vehicles and for the installation of maintenance of all necessary residential utilities. The location of said right of way is more specifically described as follows:

Beginning at a 5/8" diameter iron rebar set near the easterly sideline of Route 236 and thence proceeding South 75° 55' 43" East a distance of 165.00 feet along land now or formerly of said Timothy J. Rieser and now or formerly of Cathy G. Barnhorst to a 5/8" diameter iron rebar; thence proceeding North 76° 26' 06" East a distance of 256.40 feet to the point of beginning of the above describe 3.4 acre parcel; thence turning and proceeding South 10° 31' 03" East a distance of 50.00 feet along the above-described 3.4 acre parcel; thence turning and proceeding on a course parallel to the second course described herein, and then parallel to the first course described herein to said Route 236; thence turning and proceeding along said Route 236 on a curve to the northeast a distance of 50.00 feet, more or less, to the point of beginning.

The foregoing right of way is shown as "Proposed R-O-W" on the above-referenced Plan of Timothy J. Rieser recorded in the York County Registry of Deeds Plan Book 241, Page 18.

The above described premises are also conveyed subject to the terms and conditions of a Private Road Maintenance Agreement dated March 22, 1999 and recorded in the York County Registry of Deeds Book 9382, Page 128.

Signed this 16th day of March, 2000.

MAINE R.E. TRANSFER TAX PAID

Cathy G. Barnhorst

Cathy G. Barnhorst

State of New Hampshire

Rockingham, ss: 16th day of March, 2000

Personally appeared **Cathy G. Barnhorst**, known to me, or satisfactorily proven, to be the person whose name subscribed to the foregoing instrument and acknowledged that he/she/they executed the same for the purposes therein contained.

Deborah A. Saucier (Seal)

Justice of the Peace/Notary Public

My Commission Expires:

DEBORAH A. SAUCIER, Notary Public
My Commission Expires May 31, 2000

RECEIVED YORK S.S.
2000 MAR 20 A 10: 37

ATTEST: Lois M. Rice
REGISTER OF DEEDS

Signature Title Corp 501 Islington St, Portsmouth NH 03801

2p

236

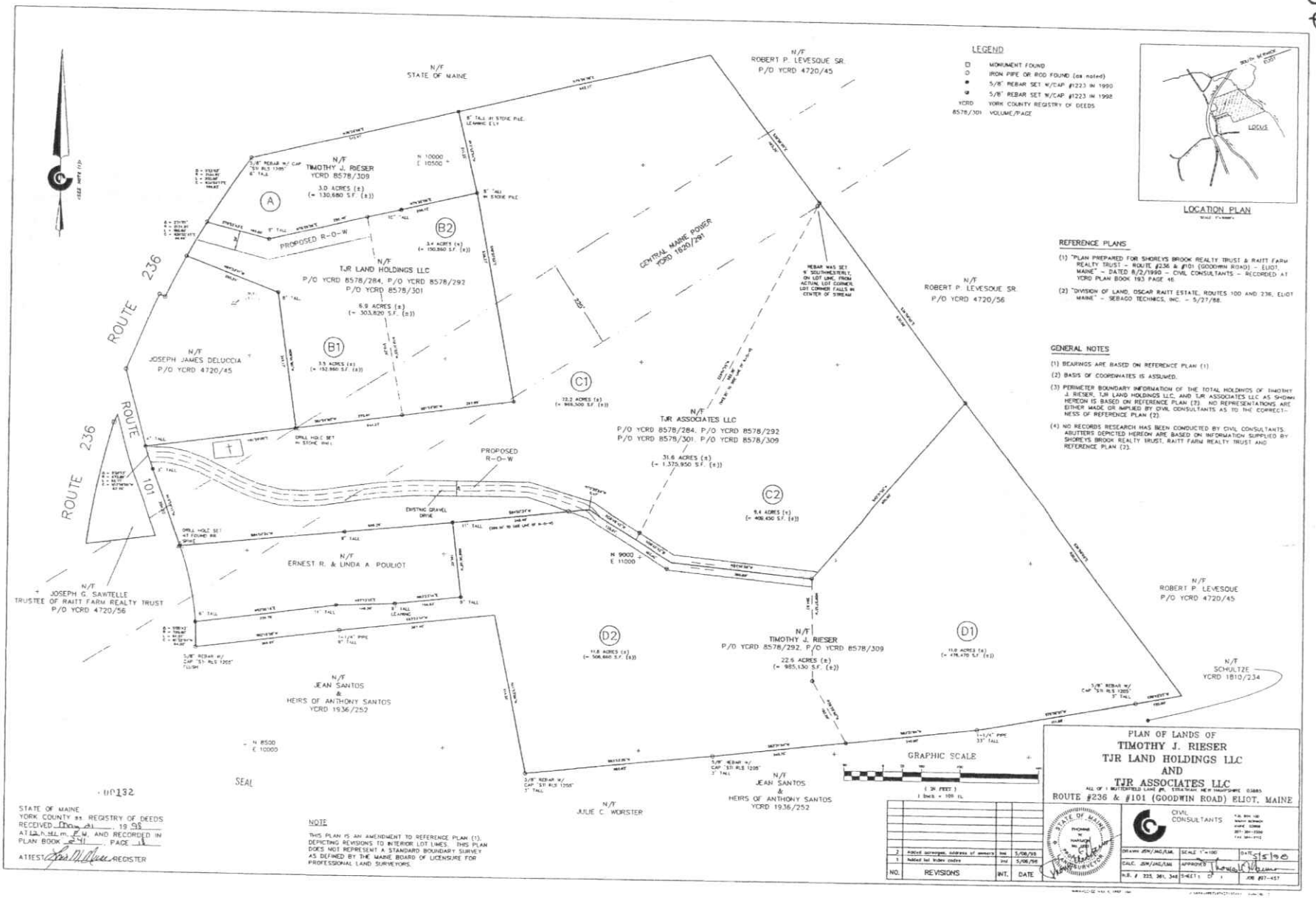
N/F
STATE OF MAINE
N/F
ROBERT P. LEVESQUE SR.
P/O YCRD 4720/45
N/F
TIMOTHY J. RIESER
YCRD 8578/309
3.0 ACRES (±)
(= 130,680 S.F. (±))
A
B2
3.4 ACRES (±)
(= 150,860 S.F. (±))
PROPOSED R-O-W
N/F
TJR LAND HOLDINGS LLC
P/O YCRD 8578/284, P/O YCRD 8578/292
P/O YCRD 8578/301
6.9 ACRES (±)
(= 303,820 S.F. (±))
B1
3.5 ACRES (±)
(= 152,460 S.F. (±))
N/F
JOSEPH JAMES DELUCCIA
P/O YCRD 4720/45
ROUTE 236
ROUTE 236
ROUTE 101
CENTRAL MAINE POWER
YCRD 1620/291
C1
7.2 ACRES (±)
(= 313,500 S.F. (±))
N/F
TJR ASSOCIATES LLC
P/O YCRD 8578/284, P/O YCRD 8578/292
P/O YCRD 8578/301, P/O YCRD 8578/309
31.6 ACRES (±)
(= 1,375,950 S.F. (±))
C2
9.4 ACRES (±)
(= 408,430 S.F. (±))
N/F
ROBERT P. LEVESQUE SR.
P/O YCRD 4720/56
PROPOSED
R-O-W
EXISTING GRAVEL DRIVE
N/F
ERNEST R. & LINDA A. POULIOT
N/F
JOSEPH G. SAWTELLE
TRUSTEE OF RAITT FARM REALTY TRUST
P/O YCRD 4720/56
N/F
ROBERT P. LEVESQUE
P/O YCRD 4720/45
D2
11.8 ACRES (±)
(= 506,860 S.F. (±))
N/F
TIMOTHY J. RIESER
P/O YCRD 8578/292, P/O YCRD 8578/309
22.6 ACRES (±)
(= 985,130 S.F. (±))
D1
11.0 ACRES (±)
(= 478,470 S.F. (±))
N/F
SCHULTZE
YCRD 1810/234
N/F
JEAN SANTOS
&
HEIRS OF ANTHONY SANTOS
YCRD 1936/252
N/F
JULIE C. WORSTER
N/F
JEAN SANTOS
&
HEIRS OF ANTHONY SANTOS
YCRD 1936/252
GRAPHIC SCALE
(IN FEET)
1 inch = 100 ft.
LEGEND
MONUMENT FOUND
IRON PIPE OR ROD FOUND (as noted)
5/8" REBAR SET W/CAP #1223 IN 1990
5/8" REBAR SET W/CAP #1223 IN 1998
YCRD YORK COUNTY REGISTRY OF DEEDS
8578/301 VOLUME/PAGE
LOCATION PLAN
LOCUS
REFERENCE PLANS
(1) "PLAN PREPARED FOR SHOREYS BROOK REALTY TRUST & RAITT FARM REALTY TRUST – ROUTE #236 & #101 (GOODWIN ROAD) – ELIOT, MAINE" – DATED 8/2/1990 – CIVIL CONSULTANTS – RECORDED AT YCRD PLAN BOOK 193 PAGE 46.
(2) "DIVISION OF LAND, OSCAR RAITT ESTATE, ROUTES 100 AND 236, ELIOT MAINE" – SEBAGO TECHNICS, INC. – 5/27/88.
GENERAL NOTES
(1) BEARINGS ARE BASED ON REFERENCE PLAN (1)
(2) BASIS OF COORDINATES IS ASSUMED.
(3) PERIMETER BOUNDARY INFORMATION OF THE TOTAL HOLDINGS OF TIMOTHY J. RIESER, TJR LAND HOLDINGS LLC, AND TJR ASSOCIATES LLC AS SHOWN HEREON IS BASED ON REFERENCE PLAN (2). NO REPRESENTATIONS ARE EITHER MADE OR IMPLIED BY CIVIL CONSULTANTS AS TO THE CORRECTNESS OF REFERENCE PLAN (2).
(4) NO RECORDS RESEARCH HAS BEEN CONDUCTED BY CIVIL CONSULTANTS. ABUTTERS DEPICTED HEREON ARE BASED ON INFORMATION SUPPLIED BY SHOREY'S BROOK REALTY TRUST, RAITT FARM REALTY TRUST AND REFERENCE PLAN (2).
NOTE
THIS PLAN IS AN AMENDMENT TO REFERENCE PLAN (1), DEPICTING REVISIONS TO INTERIOR LOT LINES. THIS PLAN DOES NOT REPRESENT A STANDARD BOUNDARY SURVEY AS DEFINED BY THE MAINE BOARD OF LICENSURE FOR PROFESSIONAL LAND SURVEYORS.
PLAN OF LANDS OF
TIMOTHY J. RIESER
TJR LAND HOLDINGS LLC
AND
TJR ASSOCIATES LLC
ROUTE #236 & #101 (GOODWIN ROAD) ELIOT, MAINE
CIVIL CONSULTANTS
NO. REVISIONS INT. DATE
2 Added surveyor, address of owners SWL 5/08/95
1 Added lot index codes JHV 5/08/95
DRAWN JDM/JAC/SWL SCALE 1"=100' DATE 3/5/90
CALC. JDM/JAC/SWL APPROVED
N.B. # 225, 361, 343 SHEETS OF JOB #87-457
SEAL
STATE OF MAINE
YORK COUNTY ss. REGISTRY OF DEEDS
RECEIVED May 21, 1995
ATTEST: REGISTER

Licensee Exhibit C

238

Sect. 250 Pr. 38

7251

BOOK 1620 PAGE 291

I.R.S. $1.65

KNOW ALL MEN BY THESE PRESENTS

That I, OSCAR E. RAITT, of Eliot in the County of York and State of Maine

in consideration of one dollar and other valuable consideration paid by CENTRAL MAINE POWER COMPANY, a corporation duly organized and existing under and by virtue of the laws of the State of Maine and having an office and place of business at Augusta, County of Kennebec, said State of Maine, the receipt whereof is hereby acknowledged, do hereby give, grant, bargain, sell and convey unto the said Central Maine Power Company, its successors and assigns, forever, the perpetual right and easement to erect, construct, maintain, repair, rebuild, respace, replace, operate, patrol and remove electric transmission, distribution and communication lines consisting of suitable and sufficient poles and towers with sufficient foundations together with wires strung upon and extending between the same for the transmission of electric energy and intelligence, together with all necessary fixtures, anchors, guys, crossarms, and other electrical equipment and appurtenances, over and across my land located in the Town/City of Eliot, County of York, State of Maine. The location of said easement is more particularly bounded and described as follows:

Over and across a strip of my land two hundred twenty-five (225) feet in width extending from the highway known as Route # 101 on the southwest in a northeasterly direction to land of Raymond E. Shorey on the northeast.

The side lines of said strip being seventy-five (75) feet distant northwesterly and one hundred fifty (150) feet distant southeasterly and parallel with the center line of the Grantee's Quaker Hill-Eliot transmission line, so-called, designated as Section 197 and its projection at both ends as now constructed.

Said center line is more particularly located and described as follows:

Beginning at a point at the easterly side of said highway, known as Route # 101, said point being two hundred seventy (270) feet, more or less, northerly along the easterly side of said highway from the southwesterly corner of the Grantor's land; thence extending North 59° 30' East, two thousand five hundred seventeen (2,517) feet, more or less, to a point and angle; thence North 33° 25' East, forty-two (42) feet, more or less, to a stone wall and land of Raymond E. Shorey.

Reference is made to deed of Arthur G. Raitt to the Grantor dated January 12, 1957, and recorded in York County Registry of Deeds in Book 1341, Page 35.

This conveyance is made subject to the rights and easements conveyed to the Grantee by Oscar E. Raitt by deed dated November 16, 1949, and recorded in the York County Registry of Deeds in Book 1150, Page 2.

There is also included in this conveyance insofar as the Grantor has the right to so convey, a continuation of said easement over said two hundred twenty-five (225) foot strip extending South 59° 30' West from the point of beginning along said center line of Section 197 to the center of said Route # 101 and land now or formerly of Charles E. Neall, Jr., subject to any rights of the public.

Also conveying to the Grantee, its successors and assigns, the right and easement at any and all times to clear and keep clear said strip of all trees, timber and bushes growing on said strip by such means as the Grantee, its successors and assigns, may select; provided, however, that the Grantor(s), ...his..... heirs and assigns, shall be entitled for a period of one (1) year from the date said strip is first cleared to any salvage of wood and timber cut by the Grantee, its successors and assigns.

Also conveying to the Grantee, its successors and assigns, the right and easement at any and all times to enter on adjacent land of the Grantor(s), ..his..... heirs and assigns, for the purpose of cutting or trimming and removing such tall tree or trees growing outside the limits of said strip as in falling would in the judgment of the Grantee, its successors and assigns, interfere with or endanger the operation and maintenance of any lines constructed along said strip.

The Grantor(s) for ....him..... self and ....his..... heirs, executors, administrators, successors and assigns, covenants and agrees to and with the Grantee, its successors and assigns, that they will not erect or maintain any building or other structure, or permit the erection or maintenance of any building or other structure, of any kind or nature upon the above described strip, and will not place, permit or allow any material of any kind or nature to accumulate on or be removed from said strip any or all of which, in the opinion of the Grantee, its successors and assigns, would endanger or interfere with the operation or maintenance of said line or lines constructed along and across said strip.

24

TO HAVE AND TO HOLD the aforegranted rights and easements, with all the privileges and appurtenances thereof to the said Central Maine Power Company, its successors and assigns, to its and their use and behoof forever. And I do covenant with the said Grantee, its successors and assigns, that I am lawfully seized in fee of the premises; that they are free of all incumbrances; that I have good right to sell and convey said easement to the said Grantee to hold as aforesaid; and that I and my heirs, shall and will warrant and defend the same to the said Grantee, its successors and assigns forever, against the lawful claims and demands of all persons.

IN WITNESS WHEREOF, I the said OSCAR E. RAITT, being a single person,

~~wife~~ ~~husband~~

joining in this deed as Grantor, and relinquishing and conveying my rights by descent and all other rights in the above described easements, have hereunto set my hand(s) and seal(s) this 16th day of September, in the year of our Lord one thousand nine hundred and sixty-four.

Signed, Sealed and Delivered
in presence of

Howard J. Haskell — Oscar E. Raitt

STATE OF MAINE York, ss. September 16, 1964.

Personally appeared the above named OSCAR E. RAITT

and acknowledged the above instrument to be his free act and deed.

Before me,

Howard J. Haskell
Justice of the Peace

York, ss.
Received OCT 1 1964, at 9 h 4 m A M
and recorded from the original.

Section 8250 9251 Parcel 138
Loudon to Eliot

WARRANTY DEED

(EASEMENT)

OSCAR E. BATTT
From

CENTRAL MAINE POWER COMPANY
To

Dated Sept. 26, 19 64

STATE OF MAINE

YORK ss. Registry of Deeds

Received OCT 2 1984 19

at 9 H. 42 M. A M., and

recorded in Book BOOK 1629 PAGE 291

Attest Phyllis F. Deschambeault
Register.

Consideration $1,00 OR WO 75698 WO 35240

Check No 5957

Exam Fee

BOO No

V.D.W.P+W

I.M. O.K.

242

Licensee Exhibit D

NOTE 1: GAS PIPELINE LOCATION VARIES ALONG R.O.W.

243

EXISTING

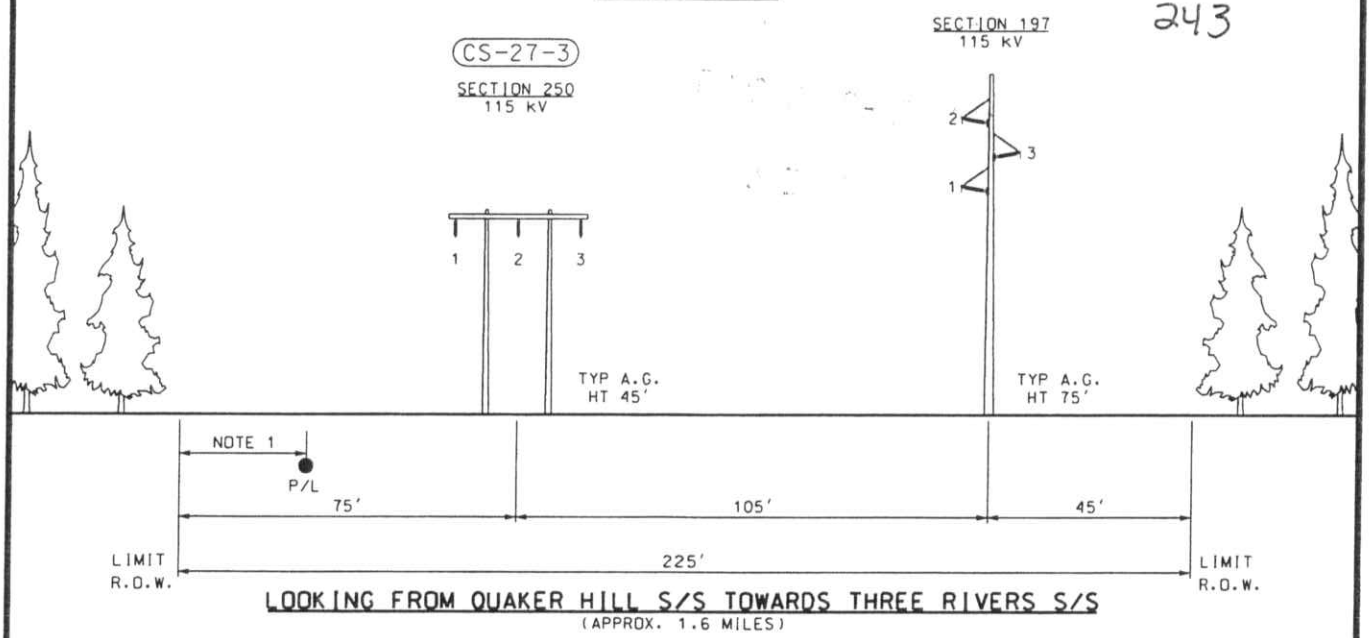

LOOKING FROM QUAKER HILL S/S TOWARDS THREE RIVERS S/S
(APPROX. 1.6 MILES)

PROPOSED

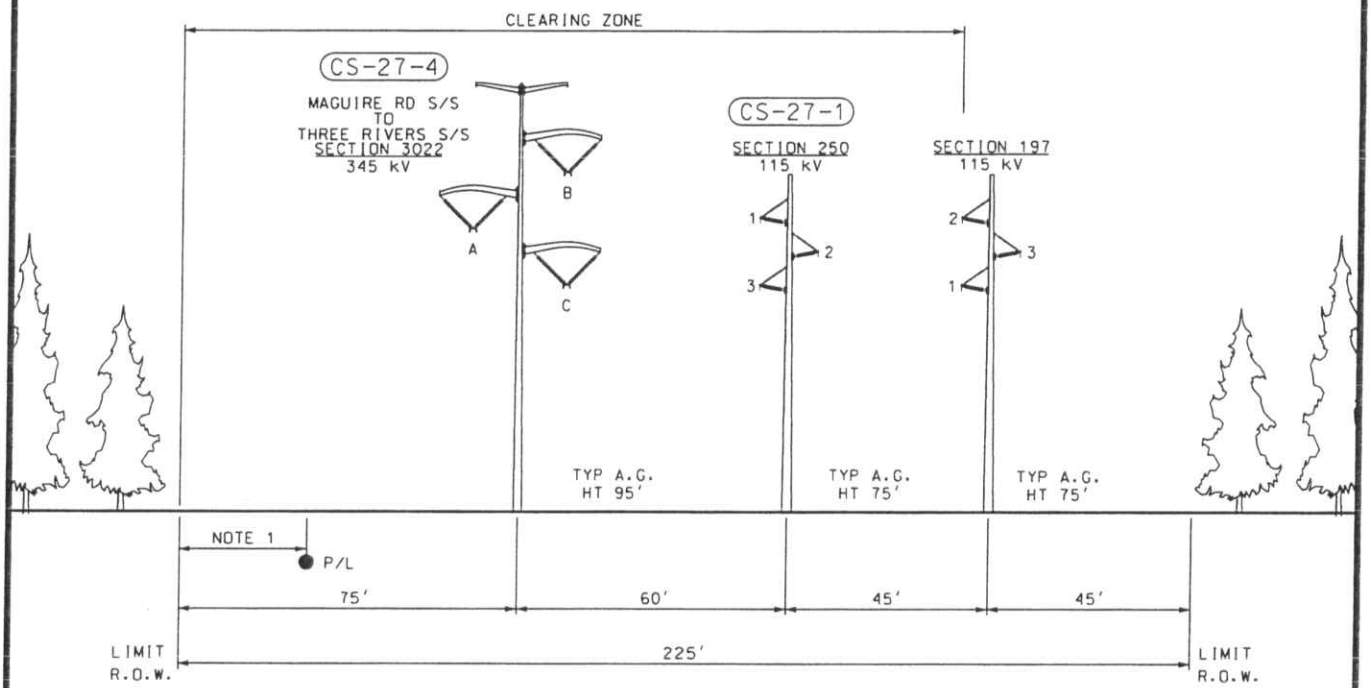

LOOKING FROM QUAKER HILL S/S TOWARDS THREE RIVERS S/S
(APPROX. 1.6 MILES)

THIS DRAWING SHALL BE REVISED ON THE CADD SYSTEM ONLY

-DRAFT-
FOR REVIEW ONLY

ENG. CONTRACTOR

NO.	REVISION	DATE	BY
G	ADDED CLEARING ZONE	9/23/09	PEI
F	ADDED SEQUENCING/PHASING	8/18/09	PEI
E	REVISED S3022/ UPDATED 115kV STRUCTURES	10/20/08	PEI
D	REVISED S197	6/5/08	PEI
C	REVISED S197	4/11/08	PEI
B	UPDATED	1/22/08	PEI

SECTION 250 | POLE 389 TO 410 | STA. 1522+73.6 TO 1607+89.3

MAINE POWER RELIABILITY PROGRAM

EXISTING AND PROPOSED R.O.W.
ALTERNATIVE S1 (ELM) FOR N-1-1 ANALYSIS

CHECKED		DESIGNED KJF	DATE 8/24/07
SGW	8/9/09	DRAWN KGH	APPR.
SCALE NTS		CENTRAL MAINE POWER CO. TRANSMISSION ENGINEERING	

SEGMENT 27

SHEET S1-E-27-9

FILE LOCATION R:\Projects\116239\DD\DWG\03 Line\ROW_X_SECTION\S1-ELM\Seg_27

SCANNED

FILENAME:S27-9.DGN