United States
Environmental Protection
Agency

Office of Air Quality
Planning and Standards
Research Triangle Park NC 27711

EPA-450/4-80-023R
June 1985

Air

EPA

Guideline for Determination of Good Engineering Practice Stack Height (Technical Support Document For the Stack Height Regulations)

(Revised)

EPA-450/4-80-023R

Guideline for Determination of Good Engineering Practice Stack Height (Technical Support Document for the Stack Height Regulations)

(Revised)

U.S. ENVIRONMENTAL PROTECTION AGENCY
Office of Air and Radiation
Office of Air Quality Planning and Standards
Research Triangle Park, NC 27711

June 1985

DISCLAIMER

This report has been reviewed by The Office of Air Quality Planning and Standards, U.S. Environmental Protection Agency, and has been approved for publication. Mention of trade names or commercial products is not intended to constitute endorsement or recommendation for use.

Preface

Section 123 of the Clean Air Act, as amended, requires EPA to promulgate regulations to assure that the degree of emission limitation required for the control of any air pollutant under an applicable State implementation Plan (SIP) is not affected by that portion of any stack height which exceeds good engineering practice (GEP) or by any other dispersion technique. The stack height regulations are somewhat complex. They define a number of statutory terms, such as "nearby" and "excessive concentrations," provide methods for determining GEP height and specify when each may be used, and implement a statutory bar on credit for use of "dispersion techniques" other than stack height. The fundamental principles used in these demonstrations are well-established, but where decisions must be made concerning a particular study, the fundamental principles frequently do not provide specific guidance. There is a need for additional basic and systematic modeling studies that can be used to provide more specific guidance. This guideline will be periodically revised as experience is gained, new techniques are developed, and old ones refined.

This document is a revision of the "Guideline for Determination of Good Engineering Practice Stack Height (Technical Support Document for the Stack Height Regulations)," EPA-450/4-80-023, July 1981. The text contains basically the same structure as the original guide, but includes changes and additions throughout. A demonstration refers to fluid modeling and wind tunnel simulation studies and the terms are used interchangeably in this document.

TABLE OF CONTENTS

	Page
PREFACE	iii
1.0 OVERVIEW AND RECOMMENDATIONS	1
1.1 Overview	1
1.2 Recommendations	5
2.0 TECHNICAL BASIS FOR GEP STACK HEIGHT	9
2.1 Description of Aerodynamic Effects	9
2.2 Building Effects	11
2.3 Quantitative Rationale for GEP Equation	19
2.4 Terrain Influences	28
2.5 Minimum Stack Height	31
2.6 Porous, Rounded, or Sloping Structures	32
3.0 DETERMINATION OF GEP STACK HEIGHT	35
3.1 Initial Assumptions	35
3.2 Simple Structures	36
3.2.1 Low Structures	38
3.2.2 Tall Structures	38
3.3 Complex Structures	41
3.3.1 Tiered Structures	41
3.3.2 Groups of Structures	43
3.4 Framework for Demonstrating GEP Stack Height	45
3.5 Determining GEP Stack Height	48
3.6 Modeling Terrain Effects	52

4.0 AIR QUALITY ESTIMATES 57

4.1 Determining Emission Limits 57

4.2 Treatment of Terrain 60

4.3 Multiple Source Impacts 60

4.4 Special Situations 61

REFERENCES 63

Appendix A. Annotated Bibliography A-1

1.0 OVERVIEW AND RECOMMENDATIONS

1.1 Overview

As required by Section 123 of the Clean Air Act, the Administrator has promulgated regulations (40 CFR 51) to assure that the degree of emission limitation required for the control of any air pollutant under an applicable State Implementation Plan (SIP) is not affected by (1) that portion of any stack height which exceeds good engineering practice (GEP) or by (2) any other dispersion technique. Section 123 defines GEP, with respect to stack heights, as "the height necessary to insure that emissions from the stack do not result in excessive concentrations of any air pollutant in the immediate vicinity of the source as a result of atmospheric downwash, eddies or wakes which may be created by the source itself, nearby structures or nearby terrain obstacles."

Section 123 further provides that GEP stack height shall not exceed two and one-half times the height of the source unless a demonstration is performed justifying a higher stack. In addition, Section 123 provides that the Administrator regulates only stack height credit, rather than actual stack height. The statute delegates to the Administrator the responsibility for defining key phrases: "excessive concentrations," "nearby," with respect to both structures and terrain obstacles, "other dispersion techniques," and what constitutes an adequate demonstration justifying stack height credits in excess of two and one-half times the height of a source.

According to 40 CFR 51.1(ii), "Good Engineering Practice (GEP) Stack Height" means the greater of:

> "1. 65 meters, measured from the ground-level elevation at the base of the stack;

2. (a) for stacks in existence on January 12, 1979, and for which the owner or operator had obtained all applicable permits or approvals required under 40 CFR Parts 51 and 52,

$$H_g = 2.5H$$

provided the owner or operator produces evidence that this equation was actually relied on in designing the stack or establishing an emission limitation to ensure protection against downwash;

(b) for all other stacks,

$$H_g = H + 1.5L$$

where: H_g = good engineering practice stack height, measured from the ground-level elevation at the base of the stack,

H = height of nearby structure(s) measured from the ground-level elevation at the base of the stack,

L = lesser dimension, height or projected width, of nearby structure(s),

provided that the EPA, State or local control agency may require the use of a field study or fluid model to verify GEP stack height for the source; or

3. The height demonstrated by a fluid model or a field study approved by the EPA, State or local control agency, which ensures that the emissions from a stack do not result in excessive concentrations of any air pollutant as a result of atmospheric downwash, wakes, or eddy effects created by the source itself, nearby structures or nearby terrain features."

The term "excessive concentration" is defined in 40 CFR 51.1(kk) for the purpose of determining good engineering practice stack height and means

"(i) for sources seeking credit for stack height exceeding that established under §51.1(ii)(2), a maximum ground-level concentration due to emissions from a stack due in whole or part to downwash, wakes or eddy effects produced by nearby structures or nearby terrain features which individually is at least 40 percent in excess of the maximum concentration experienced in the absence of such downwash, wakes, or eddy effects and which contributes to a total concentration due to emissions from all sources that is greater than an ambient air quality standard. For sources subject to the prevention of significant deterioration program (40 CFR 51.24 and 52.21), an excessive concentration alternatively means a maximum ground-level concentration due to emissions from a stack due in whole or part to downwash, wakes, or eddy effects produced by nearby structures or nearby terrain features which individually is

at least 40 percent in excess of the maximum concentration experienced in the absence of such downwash, wakes, or eddy effects and greater than a prevention of significant deterioration increment. The allowable emission rate to be used in making demonstrations under this part shall be prescribed by the new source performance standard that is applicable to the source category unless the owner or operator demonstrates this emission rate to be infeasible. Where such demonstrations are approved by the authority administering the State implementation plan, an alternative emission rate shall be established in consultation with the source owner or operator;

(ii) for sources seeking credit after October 1, 1983, for increases in existing stack heights up to heights established under §51.1(ii)(2), either (A) a maximum ground-level concentration due in whole or part to downwash, wakes, or eddy effects as provided in subparagraph (i), except that the emission rate specified by any applicable State implementation plan (or, in the absence of such a limit, the actual emission rate) shall be used, or (B) the actual presence of a local nuisance caused by the existing stack, as determined by the authority administering the State implementation plan; and

(iii) for sources seeking credit after January 12, 1979, for a stack height determined under §51.1(ii)(2) where the authority administering the State implementation plan requires the use of a field study or fluid model to verity GEP stack height, for sources seeking stack height credit after November 9, 1984, based on the aerodynamic influence of cooling towers, and for sources seeking stack height credit after December 31, 1970, based on the aerodynamic influence of structures not adequately represented by the equations in §51.1(ii)(2), a maximum ground-level concentration due in whole or part to downwash, wakes or eddy effects that is at least 40 percent in excess of the maximum concentration experienced in the absence of such down-wash, wakes or eddy effects.

According to 40 CFR 51.1(jj), the term "nearby" as used in 51.1(ii) is defined for a specific structure or terrain feature and

"(1) for purposes of applying the formulae provided in §51.1(ii) (2) means that distance up to five times the lesser of the height or the width dimension of a structure, but not greater than 0.8 km (0.5 mile), and

(2) for conducting demonstrations under §51.1(ii)(3) means not greater than 0.8 km (0.5 mile), except that the portion of a terrain feature may be considered to be nearby which falls within a distance of up to 10 times the maximum height of the feature, not to exceed 3.2 km (2 miles) if such feature achieves a height 0.8 km (0.5 mile) from the stack that is greater than or equal to 40 percent of the GEP stack height determined by the formulae provided in §51.1(ii)(2)(b)

of this part or 26 meters, whichever is greater, as measured from the ground-level elevation at the base of the stack."

The term "dispersion technique" as defined in 40 CFR 51.1(hh) means

"(1) any technique which attempts to affect the concentration of a pollutant in the ambient air by:

A. using that portion of a stack which exceeds good engineering practice stack height;

B. varying the rate of emission of a pollutant according to atmospheric conditions or ambient concentrations of that pollutant; or

C. increasing final exhaust gas plume rise by manipulating source process parameters, exhaust gas parameters, stack parameters, or combining exhaust gases from several existing stacks into one stack; or other selective handling of exhaust gas streams so as to increase the exhaust gas plume rise.

(2) The preceding sentence does not include:

A. the reheating of a gas stream, following use of a pollution control system, for the purpose of returning the gas to the temperature at which it was originally discharged from the facility generating the gas stream;

B. the merging of exhaust gas streams where:

(i) the source owner or operator demonstrates that the facility was originally designed and constructed with such merged gas streams;

(ii) after [date of publication], such merging is part of a change in operation at the facility that includes the installation of pollution controls and is accompanied by a net reduction in the allowable emissions of a pollutant. This exclusion from the definition of "dispersion techniques" shall apply only to the emission limitation for the pollutant affected by such change in operation; or

(iii) before [date of publication], such merging was part of a change in operation at the facility that included the installation of emissions control equipment or was carried out for sound economic or engineering reasons. Where there was an increase in the emission limitation or, in the event that no emission limitation was in existence prior to the merging, an increase in the quantity of pollutants actually emitted prior to the merging; the reviewing agency shall presume that, merging was significantly motivated by an intent to gain emissions credit for greater dispersion. Absent a demonstration by the source owner or operator that merging was not significantly motivated by such intent, the reviewing agency shall deny

credit for the effects of such merging in calculating the allowable emissions for the source;

C. smoke management in agricultural or silvicultural prescribed burning programs;

D. episodic restrictions on residential woodburning and open burning; or

E. techniques under 51.1(hh)(1)(C) which increase final exhaust gas plume rise where the resulting allowable emissions of sulfur dioxide from the facility do not exceed 5,000 tons per year."

This guideline provides technical support for the definitions and specifications of GEP stack height as found in the stack height regulation. The technical basis for the GEP definition is provided in Sections 2 and 3. The technical basis for Part 1 of the "excessive concentration" definition, which is the engineering requirement, is given in Sections 2 and 3 of this guideline. The basis for Part 2 of the definition, which is the "ambient requirement" is given in the preamble to the regulation. The technical information on which the definition of "nearby" is based is summarized in Sections 2 and 3 of this guideline, while the method for treatment of entire terrain features in a demonstration is also given in Section 3. All emission limitations must ensure that ambient air quality standards and PSD increments will not be exceeded. Guidance for making air quality estimates within the GEP framework is contained in Section 4.

An annotated bibliography is included that provides a representative selection of statements found in the scientific literature concerning the stack height for which adverse aerodynamic effects may be a problem.

1.2 Recommendations

The scientific literature in general indicates that a case specific review is integral to assuring the prevention of adverse aerodynamic

effects near a given source. However, the literature also identifies generalized formulations which are designed to establish the minimum stack height to prevent this phenomenon. The following recommendations are based on these generalized findings:

(1) It appears from a scientific and technical standpoint that the most appropriate procedure to follow in determining GEP stack height is to conduct fluid modeling or a field study. A framework for a fluid modeling demonstration of GEP stack height is presented in Section 3.4.

(2) The scientific literature in general indicates that a case specific review is integral to assuring the prevention of adverse aerodynamic effects near a given source. However, the literature also identifies generalized formulations which are designed to establish the minimum stack height to prevent this phenomenon. The guidance provided in Equation 1 is based on these generalized findings

$$H_g = H + 1.5L \qquad \text{(Equation 1)}$$

where:
- H_g = good engineering practice stack height, measured from the ground-level elevation at the base of the stack,
- H = height of nearby structure(s) measured from the ground-level elevation at the base of the stack,
- L = lesser dimension, height or projected width, of nearby structure(s).

In Equation 1, both the height and width of the structure are determined from the frontal area of the structure, projected onto a plane perpendicular to the direction of the wind. If the structure is asymmetrical, the GEP stack height should be based on the plane projection lying upwind from the source (stack) which results in the greatest justifiable height. The plane projection may have a multitude of heights or widths, particularly for a multilayered structure. Each combination of the height, H, and lesser dimension (height or width), L, should be evaluated for each

segment of the structure to determine which one results in the greatest GEP stack height as defined by Equation 1. Adjacent and nearby structures whose plane projections lying upwind from the source are overlaying should be considered as one structure. Likewise, structures aside of each other should be considered as one structure if their distance of separation is less than their smallest dimension (height or width).

The downwind area in which a nearby structure is presumed to have a significant influence on a source should be limited to five times the height or width of the structure, whichever is less. Thus, application of Equation 1 should be limited to emission points within 5L of the building structure. The area of influence becomes diminishingly small as the height to width ratio of a structure increases. Thus structures such as stacks and radio or TV transmission towers should not be considered in GEP stack height determinations. Assumptions associated with the determination of GEP stack height and appropriate examples are presented in Section 3. Complex structures with a multitude of heights and widths are discussed in Section 3.3. Where concern exists for possible significant effects on sources from a distance greater than 5L but less than 0.8 km (0.5 mi), a wind tunnel or field study should be conducted unless an analogy to a similar study is available.

(3) The GEP stack height required to minimize the adverse effects of elevated terrain should be determined on a case-by-case basis. A demonstration of the application of the fluid modeling approach to the determination of GEP stack height for a plant in complex terrain is shown in "Fluid Modeling Demonstration of Good Engineering Stack Height in Complex Terrain," (Snyder and Lawson, 1985). Field studies designed to evaluate the specific situations under the variety of adverse meteorological conditions are the

best source of information. Where field studies are not possible, comparable fluid model studies are acceptable. A framework for demonstrating GEP stack height by fluid modeling is presented in Section 3.4.

(4) To avoid natural atmospheric effects which cause excessive concentrations around very low level sources, a stack height of 65 meters is defined as good engineering practice, without demonstration of necessity for any source (see Section 2.5).

(5) There are certain types of structures that are more aerodynamically smooth or more streamlined than block-shaped structures. These include porous structures such as unenclosed metal supporting framework, and rounded and sloping structures such as hyperbolic cooling towers. GEP stack height calculated from Equation 1 is not applicable to these types of structures and must be determined on the basis of a field study or fluid modeling demonstration.

2.0 TECHNICAL BASIS FOR GEP STACK HEIGHT

2.1 Description of Aerodynamic Effects

Atmospheric flow is disrupted by aerodynamic forces in the immediate vicinity of structures or terrain obstacles. The aerodynamic forces evolve from interacting frictional forces and pressure gradients induced by the local obstruction. The surface friction and pressure gradients combine to retard the atmospheric surface layer flow enough to produce regions where the flow is locally distorted, causing an area of stagnation (cavity) to develop. The flow within the stagnant region is highly turbulent and conceptually perceived as circulating eddies. The outer boundary of the eddy or cavity region extends from the point of separation to reattachment downwind, as shown in Figure 1. The wake is defined as the entire region of the flow field that is disturbed by the obstacle. The upper boundary of the wake is called the "envelope", as shown in Figure 1. The reattachment point is taken as the ground-level position where the flow is no longer drawn back towards the backside of the building. Downwind, beyond the reattachment, the flow readjusts itself to a boundary layer appropriate to local surface roughness. For sharp-edged obstacles the flow distinctly separates at the leading edges. For rounded obstacles the point of separation can vary greatly. The disrupted flow near either building structures or terrain obstacles can both enhance the vertical dispersion of emissions from the source and reduce the effective height of emissions from the source. For elevated sources, these aerodynamic effects tend to cause an increase in the maximum ground-level concentrations.

Additional discussions of the aerodynamically induced disruption aroun obstacles can be found, for example, in Hunt, et al. (1978); Cermak (1976); Halitsky (1969); and Batchelor (1967). The complex pattern of flow around

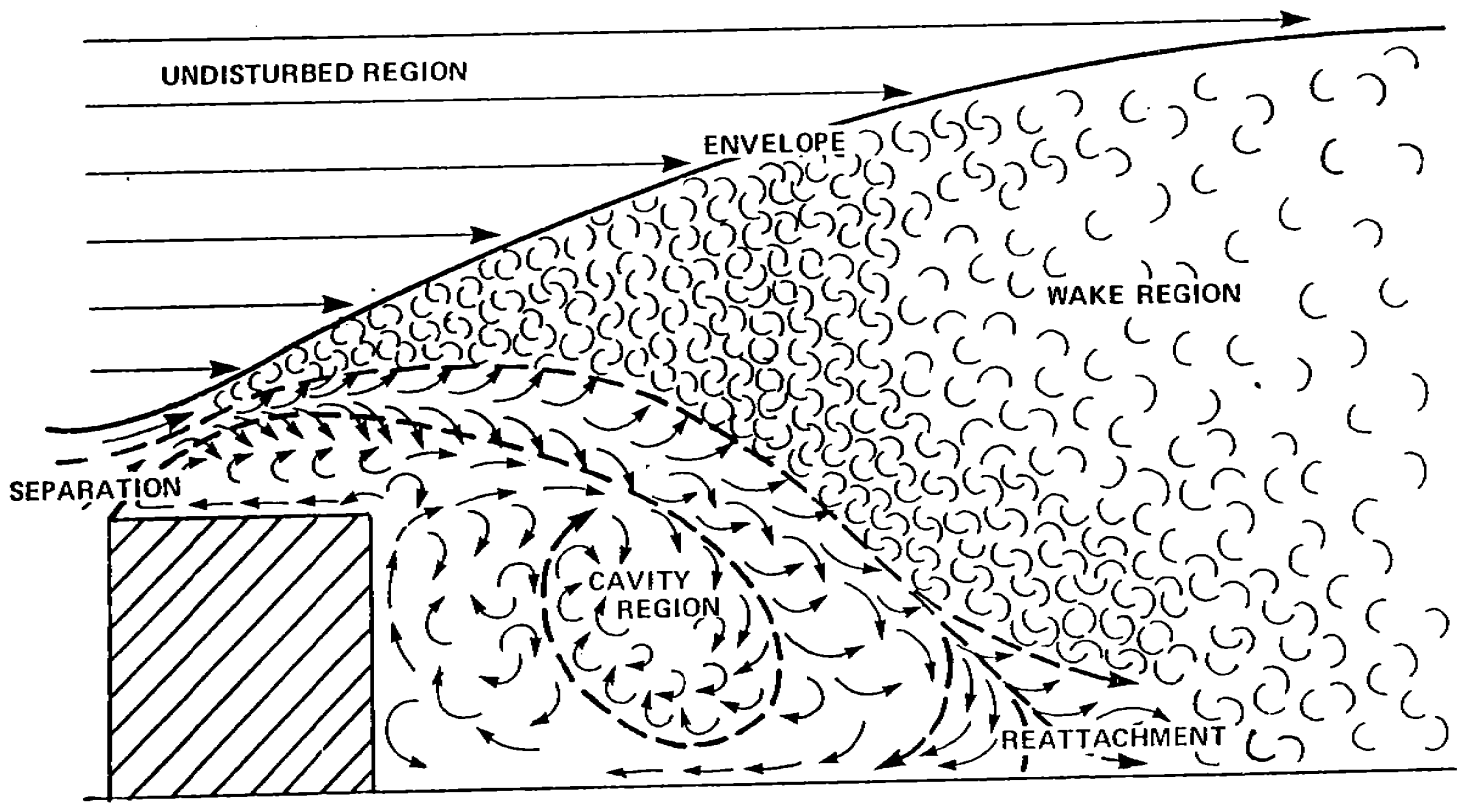

Figure 1. Diagrammatic outline of the envelope and cavity regions in the wake of a building (vertical section).

a rectangular block is depicted by Figure 2. A review of the literature clearly indicates that the aerodynamic influences and the extent of the wake are highly dependent on the particular shape and design of the obstruction. The extent of the wake also depends on the characteristics of the approaching atmospheric flow. Presently, theoretical and quantitative understanding of the extent of obstacle influences are limited. Further examinations of the extent of influence for a wide range of structures and terrain obstacles are needed.

2.2 Building Effects

The scientific literature in general indicates that a case specific review is integral to assuring the prevention of adverse aerodynamic effects in the immediate vicinity of a given source. However, the literature also identifies generalized formulations which are designed to establish minimum stack heights to prevent this phenomenon. One such formulation is the "2.5 times rule," which specifies that stacks designed to discharge their effluent at least 2.5 times the height of the highest nearby structures would escape building influences. This rule arose during the early part of this century as a practical formula. Hawkins and Nonhebel (1955) reported that the rule had been successfully used by the British electricity generating industry during the previous 20 years. A British government report (Beaver, 1954), which summarizes the informed opinion at that time, presents the 2.5 times rule as successfully used in practice. According to Sutton (1960) the rule was probably originally deduced by Sir David Brunt from W. R. Morgan's study of the height of disturbances over a ridge in connection with an investigation into the disaster of an airship. Marks' Standard Handbook for Mechanical Engineers (Baumeister, et al. 1978) states that "a ratio of stack height to

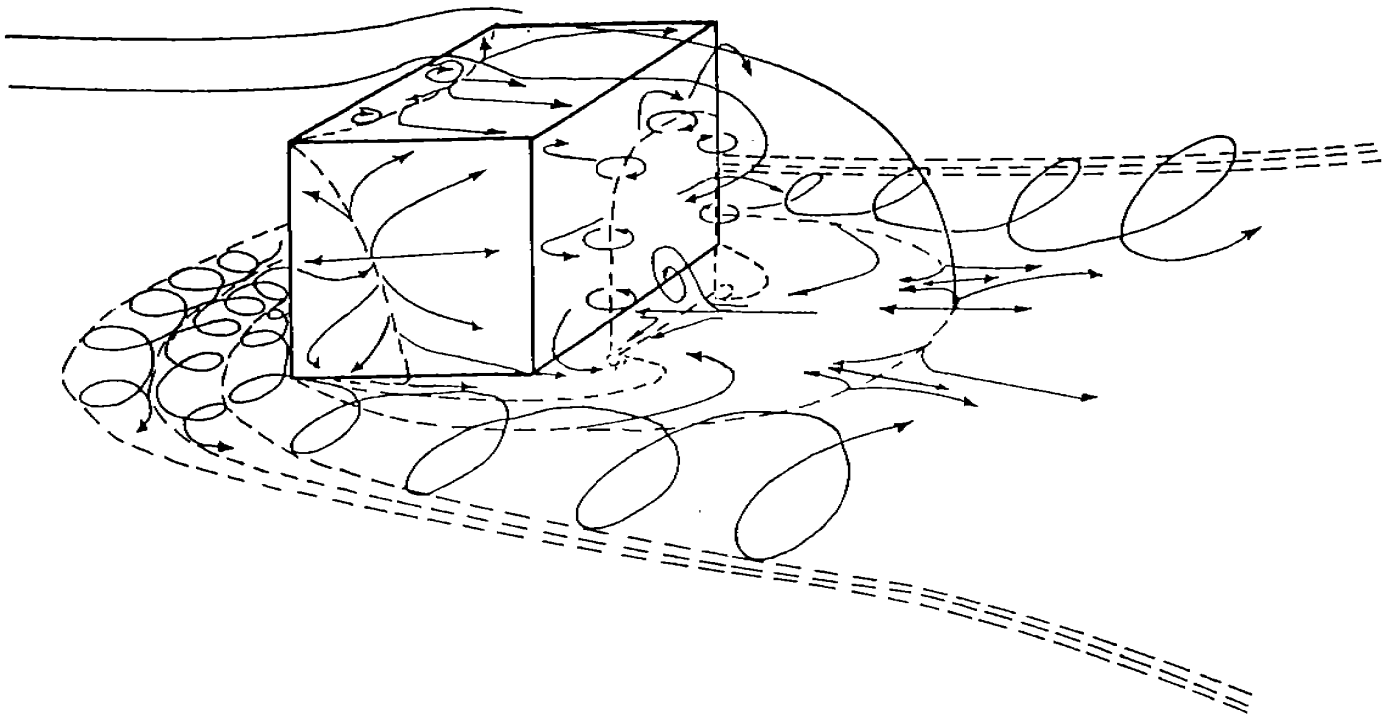

Figure 2. Depiction of flow pattern around a rectangular block as presented by Woo et al., 1977 and Hunt et al., 1978.

building height of 2-1/2 to 1 or more is commonly used to avoid entrapment of the plume in the vortex of adjacent buildings and the associated high ratios of ground-level concentration."

No matter what its origins, the rule can be generally supported by scientific literature. In some instances where application of the 2.5 times rule was considered impractical, individual evaluations of the specific case have been made. Most of these studies were conducted as scale model studies in a wind tunnel where the design parameters could be easily adjusted to determine the necessary stack placement and height. Unfortunately, field studies have been limited to a few case-specific problems. The following are among the most significant findings from studies of building wake effects.

Evans (1957) estimated the smoke visualized shape and size of the cavity region for nearly two hundred variations of basic building shapes in a wind tunnel study. He found that regardless of the height of the building the pattern of the air going over the top of the buildings appeared the same. Examination of the published sketches shows the cavity to extend from the ground vertically to about 1.5 times the height of the building. In case of pitched roofs the height scale should be taken as the height of its apex. When the width of the building was increased from 1 to 8 times its height, the downwind extent of the cavity increased from 2 to 5 times the building height. As the width of the building was further increased to 28 times its height, the downwind extent was found to increase at a somewhat smaller rate to 9 times the building height.

Wind tunnel tests defining the influence of block-type structures on smoke emissions from roof-mounted chimneys were conducted by Lord, et al. (1964). An examination of their results shows that the height of the cavity

is nearly equal to the building height plus one-half times the building height or width, whichever is less. However, the maximum vertical extent of the disturbed flow above the cavity was found to be equal to the building height plus up to 3 times the building height or width, whichever is less.

Halitsky (1968) reviewed several wind tunnel studies of flow near structures. One of the studies (Halitsky, et al. 1963) demonstrated that the wake in the lee of a rounded building is not as great as that found in a study of sharp-edged buildings (Halitsky, 1963). Meroney and Yang (1971) found that for a stack less than 1.5 times the building height the plume was downwashed into the lee side of the building. When the stack height was increased to 2.0 times the height of the building the influences were greatly diminished.

A formulation that prescribes the stack height sufficient to avoid significant building influences has been presented by Lucas (1972) and Briggs (1973). They state that a stack should equal the height of the building plus 1.5 times the height or width, whichever is less. Snyder and Lawson (1976) in a series of wind tunnel tests showed that this formulation is adequate for a stack close to a building whose height is three times its width, and for a building whose width is twice its height.

Peterka and Cermak (1975) present an evaluation of mean velocity and turbulence characteristics in the wake of buildings based on wind tunnel studies. They found for wider buildings, that the mean velocity defect and turbulence excess did not begin until 3 to 5 building heights downstream while the decay began almost immediately downstream of tall, narrow buildings. Differences were found in the flow behind a rectangular shaped building (height to width ratio of 2.44) when oriented perpendicular to the approach flow compared to that when oriented at 47 degrees to the approach flow.

The mean velocity defect decayed fairly rapidly over the first 20 building heights in both cases. However, for the 47 degree case, an excess of 3 to 4 percent of the freestream velocity remained constant to 80 building heights downwind. No evidence of a turbulence excess or defect was found at such a great distance. The existence of a mean velocity defect to 80 building heights is believed evidence of a vortex pair with axes parallel to the flow direction which are a remnant of the corner vortices formed at the leading roof corner. The vertical profiles of mean velocity defect and turbulence intensity excess which are reported for the perpendicular case, show values less than 5 percent at all heights greater than 2.5 times the building.

Hansen and Cermak (1975) and Woo, Peterka, and Cermak (1976) present additional wind tunnel measurements of mean velocity and turbulence characteristics in the wakes of structures. The results are similar to those discussed above. The downstream extent of the recirculation (i.e., cavity) region determined from mean velocity and turbulence measurements is identified in Woo, Peterka, and Cermak (1976) for a range of model sizes and test conditions. In most cases, the downstream extent was found equal to 3 to 5 building heights except for tall, narrow structures whose downstream extent was much less.

Robins and Castro (1977) examined the wind tunnel flow field in the vicinity of a model cube. The flow around the cubes was found to be highly dependent on orientation. Strong vortices generated by the top leading edges were found for an approach flow at 45 degrees to the building edge. They found the cavity region to extend to 1.5 times the building height for an approach flow perpendicular to the building edge and to 2 times the building height downwind for an approach flow at 45 degrees to the building edge. The downwind zone, where the flow was significantly affected, extended, however,

to 5 building heights for both cases. The effluent from a stack 2.5 times the building height having a stack exit velocity 3 times the wind speed, was found to be insignificantly affected by the building for an approach flow perpendicular to the building edge and to result in a 20 percent increase in maximum ground-level concentrations for an approach flow at 45 degrees to the building edge.

Huber and Snyder (1976) evaluated a series of wind tunnel studies designed to examine building wake effects near a building whose width was twice its height. The size of the cavity was found to be approximately 1.5 building heights above ground level in the vertical and 2.5 building heights downwind. In evaluating the building influence on dispersion, aerodynamically generated turbulent flow was found to rapidly decay in the region 3 to 10 building heights downwind. The most significant disturbed flow occurred within 5 buildings heights downwind. A significant building influence on ground-level concentrations was found for cases with the stack less than 2 times the building height. The building influences were found to be significantly reduced for a stack 2.5 times the height of the building.

In the vicinity of building structures where mechanically generated turbulence dominates the undisturbed atmospheric flow, wind tunnel modeling has been found to be very reliable. However, near the outer boundaries of the wake, differences can be significant. In the above early studies of Evans (1957) and Lord, et al. (1964) no attempt was made to simulate an atmospheric boundary layer. Thus, preference should be given to the results in the most recent studies.

A review and evaluation of the current literature as reflected above and in the annotated bibliography reveals a consensus that the height of the cavity downwind of structures extends to the height of the structure

plus 0.5 times the height or width, whichever dimension is less. However, significant influences on plume behavior are found to extend farther. The well established 2.5 times rule is found to be the consensus as the stack height necessary to avoid significant effects for buildings whose projected width is greater than its height, although individual studies show some deviation. For tall buildings, where the width is less than the height, the stack height need only be equal to the height of the building plus 1.5 times it width. Thus, the good engineering practice stack height has been determined to be equal to the height of the structure plus 1.5 times the height or width, whichever is less. This determination is most applicable to sharp-edged structures. The extent of significant effects for rounded structures are likely not as great as those for sharp-edged structures, although there is very little information available.

The downwind extent of the highly turbulent region where there are significant effects is, unfortunately, not as well defined. Based on the current literature, it is recommended that, for the purposes of determining GEP stack height, the downwind extent of the highly turbulent region be taken downwind of the lee side as 5 times the height or width of the structure, whichever is less, i.e., 5L from Equation 1. This choice is most applicable to a structure whose width is less than 10 times its height. In situations where the structure is wider than 10 times its height, there may be significant adverse effects extending farther downwind. The distance, 5L, generally corresponds to the cavity length. Most sources that are so close to a structure will likely be greatly affected if their height is less than GEP stack height as determined above. Sources at increasingly greater distances would need a decreasingly lower stack height in order not to be

significantly affected. This would be especially true for highly buoyant sources whose emissions would rapidly rise to heights well above the disturbed flow. General rules for defining a GEP stack height for sources at distances greater than 5L are not presently feasible. Where concern exists for possible significant effects on sources greater than a distance 5L, a wind tunnel or field study should be conducted unless some reference to a similar study is available.

Evaluation of the wind tunnel results of Evans (1957) indicates that for extremely wide buildings the maximum extent of adverse effects likely do not extend beyond 10 times their height. In the wind tunnel studies and literature review reported by Huber, et al. (1976) on flow over two-dimensional obstacles a maximum extent of 10 times the obstacle height was found, for the cavity region, except in the case of very thin obstacles where the extent was found to be much greater. Hosker (1979) has made an extensive review of the literature and has developed an empirical estimation procedure for cavity length behind two and three dimensional shape-edged rectangular buildings. This presentation could be used as a guide to indicate where a demonstration study for credit beyond 5L is likely justified. However, additional factors which are not presently understood may effect the downwind extent of significant influence. Again, very little information was found for rounded structures which are unlikely to have as great a downwind influence as do sharp-edged structures. However, hemisphere shaped obstacles and sharp-edged obstacles placed with a 45 degree orientation to the approach wind have been both shown by Peterka and Cermak (1975) to have weak vortex patterns which may persist far downstream. It is not known, however, what effect the weak vortex pattern could have on emissions from stacks.

2.3 Quantitative Rationale for GEP Equation

Little of the literature on building effects presented above and in the annotated bibliography contains specific data that can be used in evaluating building influences. Design stack height near buildings has been based mostly on theory and experience with minimal supporting data. Also, some of the data available cannot be used because no measurements of concentrations in the absence of buildings were taken for comparison. Specific data available from the literature concerning cavity and wake height are summarized in Figures 3 and 4.

In Figure 3, cavity height (h_c) is found to be well represented by

$$h_c = H + 0.5L \qquad \text{(Equation 2)}$$

The scatter of data appears evenly distributed about the line with slope equal to 1.0. The three sets of data included in Figure 3 were taken from wind tunnel studies where smoke was used to visualize the region where flow was circulating.

Figure 4 presents data from studies defining the necessary stack height in the absence of any plume rise to avoid some wake effect. These data are only qualitatively useful since no measure of the significance of the effect on air quality problems can be inferred. The wake height (h_w) estimate has been used above to define GEP stack height as formulated by

$$h_w = H + 1.5L \qquad \text{(Equation 3)}$$

The data from Meroney and Yang (1971) and Lord, et al. (1964) came from observations of the plume centerline visualized through smoke. The wake height estimate was defined as the minimum plume centerline height found to be unaffected by the building. The other data are from an examination of vertical concentration profiles. For these data, the wake heights were defined as the plume centerline height where profiles both with and without

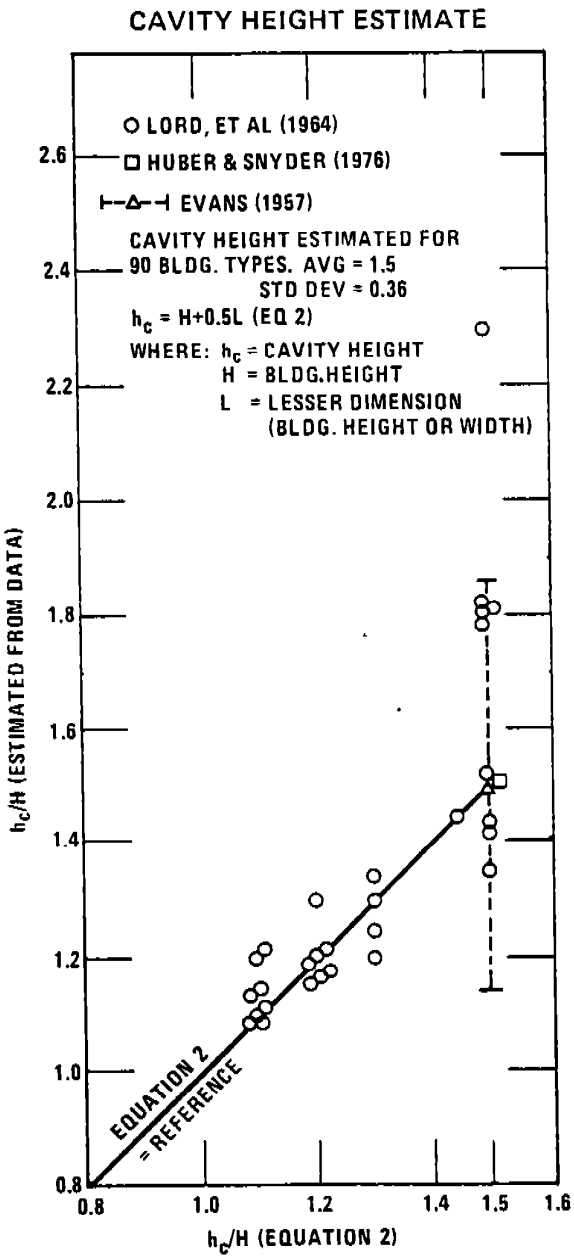

Figure 3. Cavity height estimate.

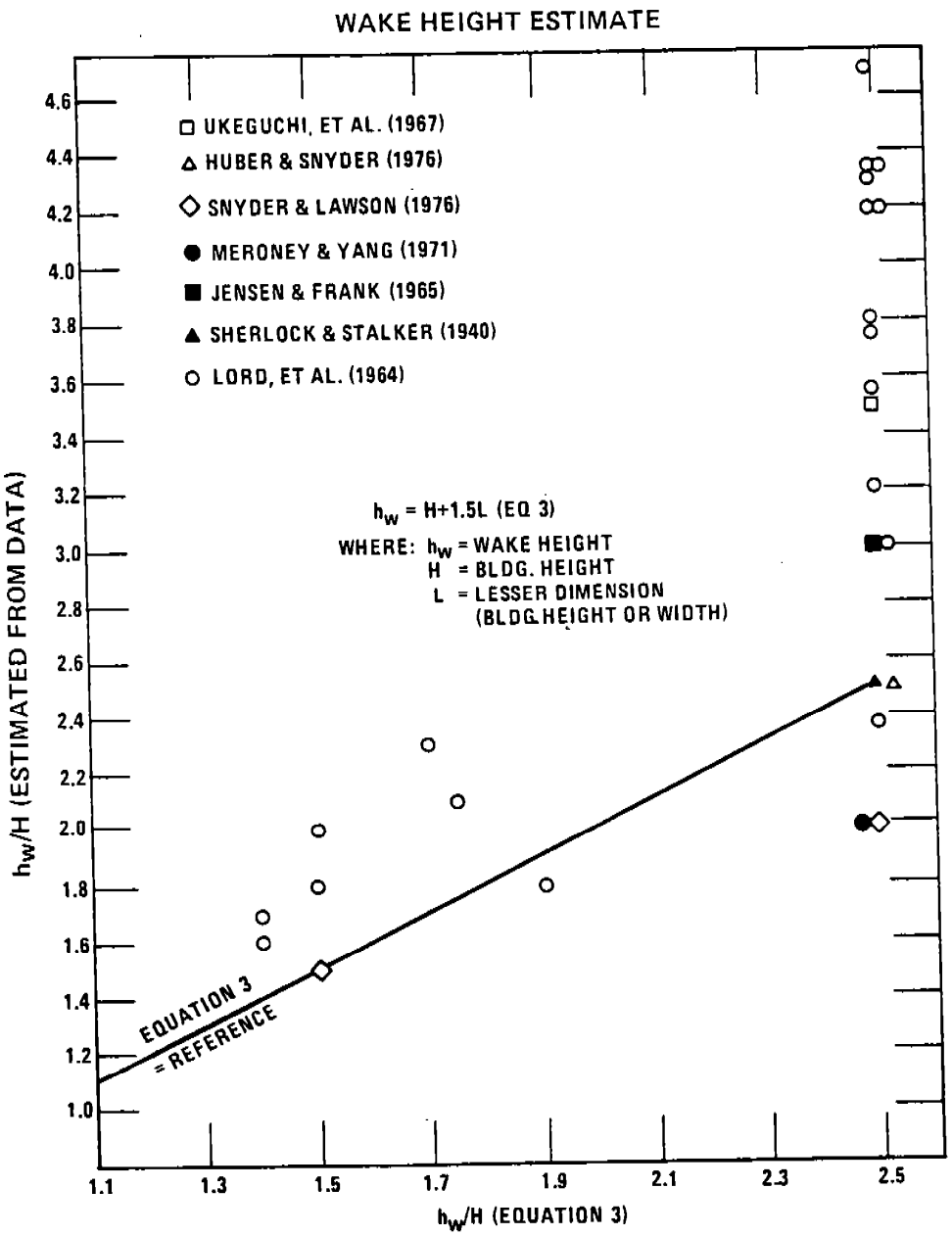

Figure 4. Wake height estimate.

the building were judged to be essentially the same. One must be very careful in interpreting the data in Figure 4. The visualized studies can be strongly biased by the observer's eye and are extremely sensitive to the density of the smoke. The information from concentration profiles is influenced strongly by where the traverse through the plume is made and the judgment in determining what constitutes a significant concentration difference. In all these studies a higher stack would have been required if the objective were to determine the height at which there was no building wake effect on the emissions. Most of the data presented in Figure 4 came from studies which did not fully consider proper simulation of atmospheric flow. Influences due to building effects would be diminished in highly unstable and/or turbulent atmospheric conditions.

The data presented in Figure 4 show Equation 3 to approximate the lower bound of these measurements. Although the consensus opinion in the scientific literature strongly supports using Equation 3 to determine GEP stack height, actual studies could show the need for a much taller or lower stack depending on one's interpretation of what is a significant influence and on the effect of possible plume rise. To more precisely define that height for a specific stack, ground-level measurement both in the wake of and in the absence of the building are needed to assess the increase in maximum concentrations. The ground-level measurements must be sufficient to determine the location of the maximum concentration which may occur at a different position in the wake of the building than found in absence of the building. The increase in maximum concentration is simply the difference between the maximum concentration found in the wake of the building and that found in absence of the building. This concentration increase can be assessed to determine whether the increase is at least 40% in excess of that which is

projected to occur in the absence of such structures. In practice, successive runs varying the physical stack height would be conducted until the concentration increase due to building influence meets the "40% criterion."

There are only a few data sets having ground-level measurements that included increased maximum concentrations in the literature which can be used to determine the effect of increasing stack heights on ground-level concentrations. Snyder (1979) reported on additional EPA data at the May 30, 1979, public hearing on the stack height regulation. All data are presented in Figures 5, 6 and 7. A theoretical estimate (Britter, et al. 1976) of increased maximum is also presented. The theoretical estimate assumes the building is much wider than it is high, and should be considered as providing an upper estimate. For all data, the plume rise was very small and thus plume centerline height is nearly equal to stack height. In all cases, the simulated atmospheric flow is likely typical of that which occurs for high wind, neutrally stable situations. Thus differences among the data are due to change in stack height, building size, or building orientation.

The maximum ground-level concentrations downwind of the building and in absence of the building were used to form the concentration ratios in Figures 5, 6 and 7. The maximum ground-level concentrations occur naturally at different positions. The data in Figures 5 and 6, as presented by Snyder (1979), show that higher concentrations downwind of buildings depend quite strongly on building width. Ground-level maximum concentrations associated with a stack 2.5 times the cubical and the wide buildings oriented perpendicular to the approach wind (i.e., zero degrees building angle) are found to be increased by roughly 20 to 40 percent by the building wake. The theoretical estimate suggests an 80 percent increase as an upper limit. The data for the same buildings oriented 45 degrees to the approach flow are found to have

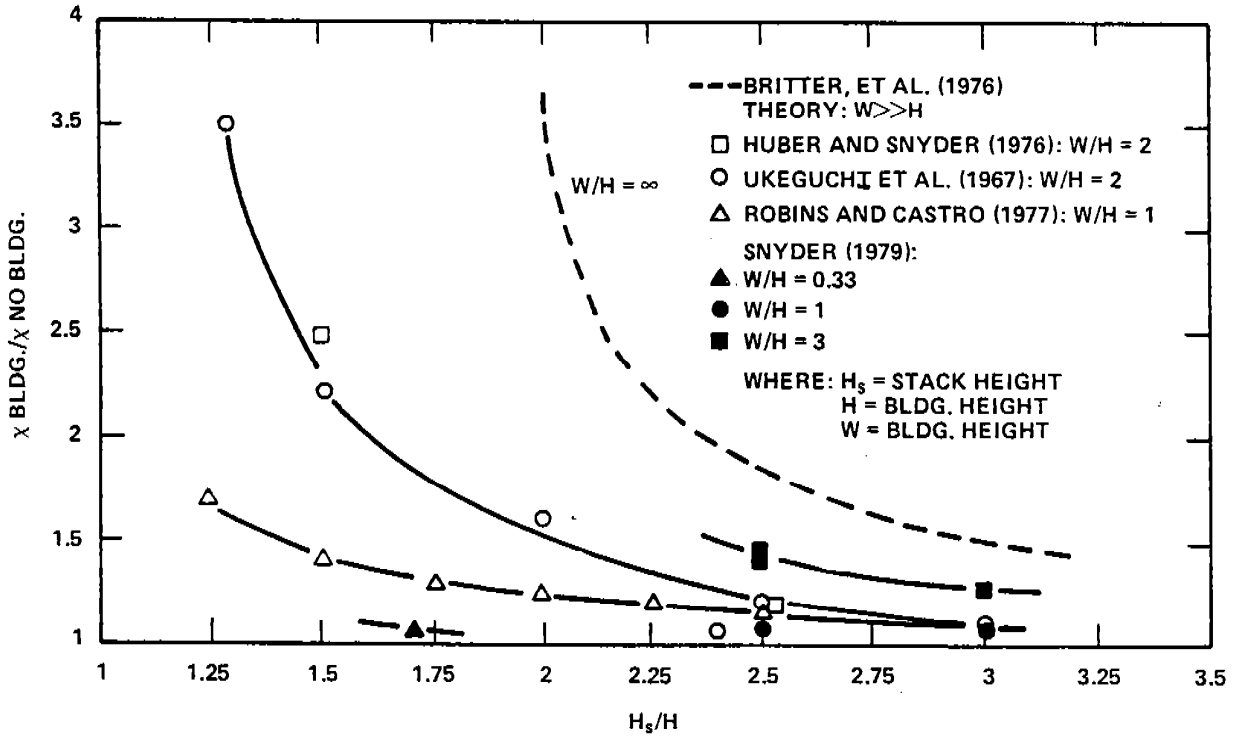

Figure 5. Comparison of increased maximum ground-level concentrations for 0° building angle cases.

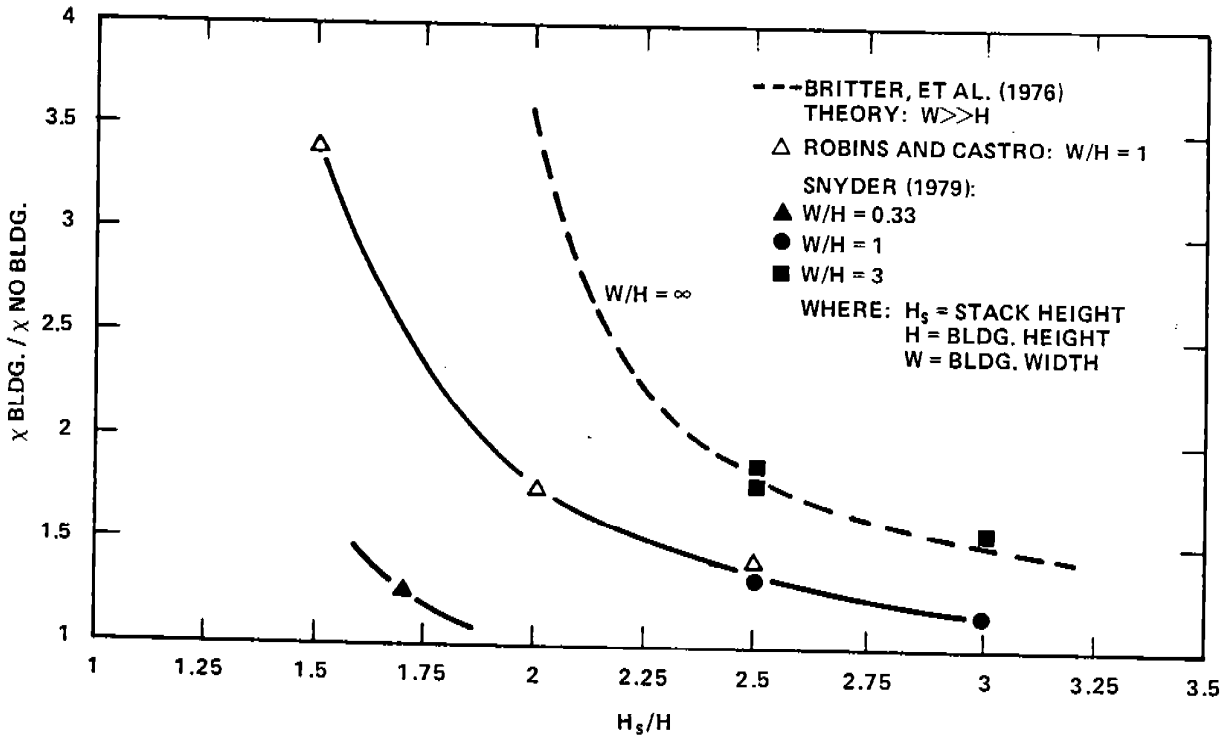

Figure 6. Comparison of increased maximum ground-level concentrations for 45° building angle cases.

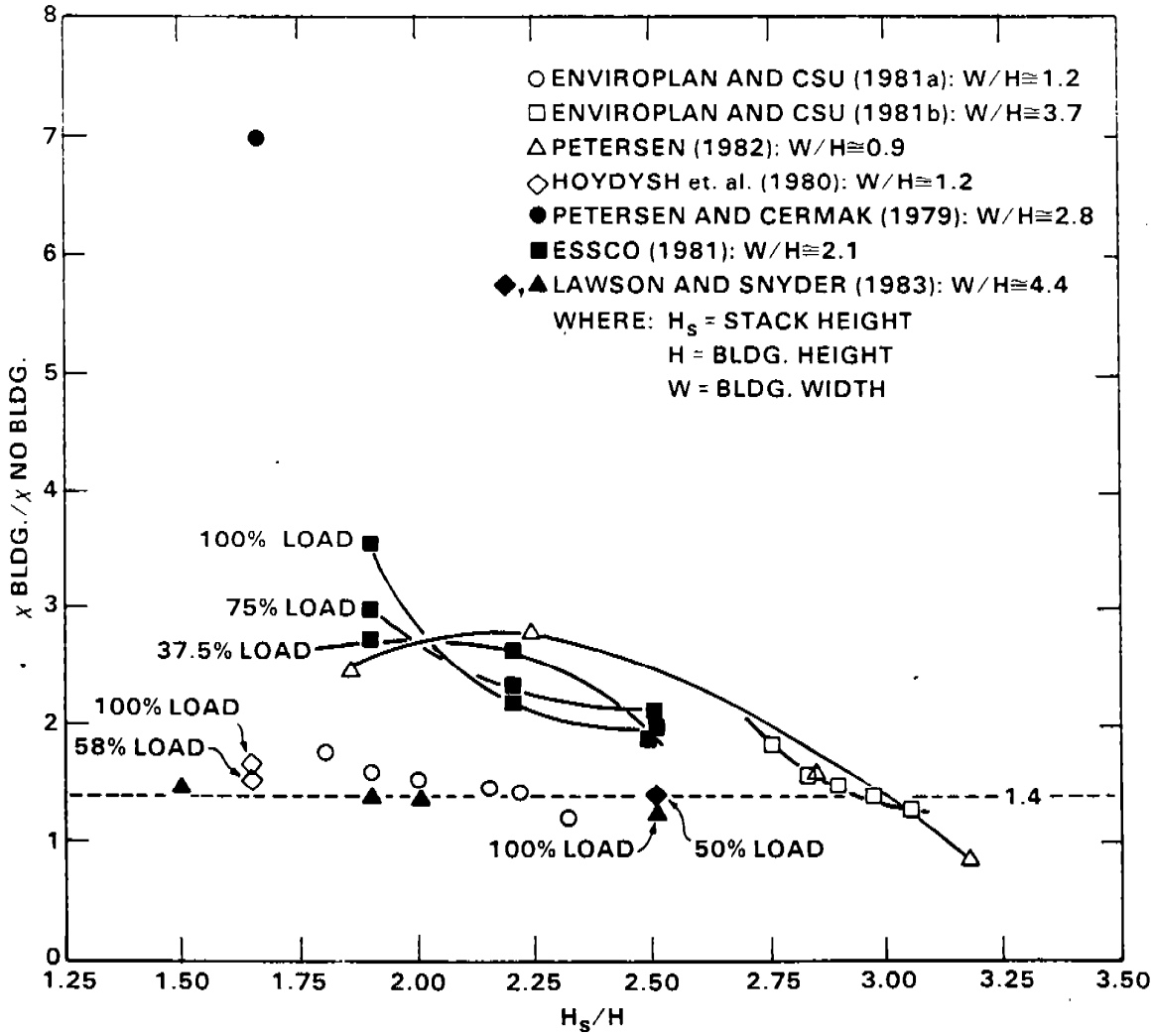

Figure 7. Comparison of increased maximum ground-level concentrations based on recent fluid model demonstrations for actual power plants.

concentrations increased by roughly 40 to 80 percent. The differences are due to the presence of longitudinal vortices in the wake of buildings having a 45 degree orientation to the approach wind as discussed in Section 2.2. The 80 percent increase found for the building with W/H = 3 and having a 45 degree building angle very likely represents the maximum effect of changing building orientation since, for wider buildings, the longitudinal vortices generated at the sides of the building would be less likely to interact. Also the data are for a source centered on the building and having no plume rise. These conditions should result in the greatest potential effect.

Thus, it is anticipated for most situations, that maximum ground-level concentrations downwind of building structures should not be increased by more than 40 to 80 percent if the stack is equal to 2.5 times the building height. Data for the tall thin building (W/H = 0.33) shows that a stack much less than 2.5 times the building height is needed to avoid increases. GEP stack height as given by Equation 1 is equal to 1.5 times the building height for the 0 degree building angle case and equal to 1.7 times the building height for the 45 degree building angle case. The increase in maximum ground-level concentration from such stack heights was found by Snyder (1979) to be increased by less than 40 percent.

Figure 7 presents the results of recent wind tunnel studies for six separate power plants (one plant was modeled twice) which considered EPA guidance and conducted fluid modeling demonstrations. The GEP height for five of these plants, based on Equation 1, is $H_S/H = 2.5$ (since the plants are wider than they are tall). The results for the Eastlake Power Plant (Enviroplan 1981a) demonstrated a GEP height, based on the 40% excess concentration and NAAQS exceedance criteria, less than the GEP formula height given by Equation 1. Also, it should be noted that the results shown by Lawson and

Snyder (1983) are based on data collected at EPA's wind tunnel facility for a building orientation fixed at 0 degrees. Use of oblique angles may have resulted in a greater plume downwash effect, i.e. a larger concentration ratio.

Also shown in Figure 7 are data based on 100% plant load factor, and where available, several other plant load conditions. For the three studies that utilized several load factors, the resulting demonstrated GEP height is shown to be only slightly influenced by this variable.

Thus, recent fluid modeling studies for separate power plants indicate that application of the GEP formula (Equation 1) generally yields lower stack heights than were justified using fluid modeling. The severity of building effects on plume downwash is naturally affected by the building design, orientation to the wind, and the stack-building separation distance. Additional experience and research may lead to refinements of the GEP formula.

2.4 Terrain Influences

Elevated terrain can be much larger than most building structures. Atmospheric phenomena on these scales can have a great influence on the development of aerodynamic forces, beyond those found in the wake of low-lying structures. Very few definitive evaluations of the extent of significant adverse effects in the wake of terrain obstacles are found in current literature.

The review of published field studies presented by Huber, et al. (1976) strongly supports the assertion that, on the leeward side of a mountain ridge, a circulating eddy with strong downwash and dispersion characteristics can exist. Many of these studies are contained in the annotated bibliography. However, information that could define the point where the flow separates and the size and extent of the cavity was not found. The point of separation appears to be a function of mean flow speed and

direction, atmospheric stability, downslope and upslope angle of the ridge sides, and the location of the ridge with respect to surrounding terrain.

For a particular situation, the greatest cavity occurs when flow separation occurs at the ridge apex. Both field studies and fluid modeling results confirm a natural expectation that the more obtrusive the ridge, the larger the cavity region. Obstructions with salient features should exhibit definite separation at their edges under all atmospheric conditions. The size of the cavity region is greatest for isolated ridges with steep sloping sides. Stable atmospheric conditions act to restrict the size and extent of the cavity region. Under highly stable flows other phenomena, such as lee waves and rotors, may be found. Terrain features that most adversely affect flow are two-dimensional in nature. Lateral air motion around a hill under neutral stability results in a smaller eddy size than would be observed for a two-dimensional ridge.

Sporn and Frankenberg (1966) and Frankenberg (1968) recognized the potential for adverse terrain influences in the late 1960's when their pioneering experience with tall stacks began. A wind tunnel study was conducted for the Clifty Creek plant since preliminary evaluations indicated that there would be unusual difficulties from an aerodynamic standpoint. An abrupt rise of the terrain to a plateau approximately 100 m above plant level was found in the prevailing downwind direction. The authors indicate that the results of the wind tunnel study showed that stacks with a gas exit velocity of 36 m/s and a height twice the plateau height (200 m) would be adequate to insure that the plume would not intercept the boundary layer flow along the hillside and be immediately brought to the ground. The Kyger Creek plant presented no special terrain problems so the stack height was determined from diffusion calculations only. The results of the analyses at Clifty Creek and Kyger

Creek were used as a guide in determining the necessary stack design for newer facilities. For example, the stacks at the Cardinal Power Plant were constructed 251.8 m high; this makes them about 1.5 times the height of the surrounding terrain, Frankenberg, et al. (1970.)

Williams and Dowd (1969) report that wind tunnel studies of gaseous diffusion have been used in many cases to help determine stack heights. It has been observed, however, that for scaling ratios larger than 600:1, consistent and repeatable results become difficult to obtain.

A study, "Plume Dispersion in Complex Terrain," by Johnson and Mage (1978) was found to provide some specific cases applicable to assessment of potential terrain effects for two American Electric Power generating plants. The stack of the Mitchell Power Plant is more than 2.5 times higher than the maximum terrain features in the vicinity of the plant, while the stacks at the Kammer Power Plant are nearly equal to the elevations of the surrounding terrain. The horizontal spread of the plume from the stacks of the Kammer Power Plant were found on the average to be twice as large as the spread found for the Mitchell Power Plant.

Recent results from wind tunnel research conducted by EPA (Lawson, 1984) show that for a three-dimensional axisymmetric hill with maximum slope of 16°, a region of 40% increase in concentration was found to extend a maximum of 1.8 hill heights in the vertical, 14 hill heights upstream, and 10 hill heights downstream. For a two-dimensional ridge with a maximum slope of 24°, this region of 40% increase in concentration extended 2.2 hill heights in the vertical, 8 hill heights upstream, and 15 hill heights downstream. A terrain amplification factor was defined as the ratio of maximum ground level concentrations in the presence of hills to those in absence of hills (in flat terrain). Maximum terrain amplification factors for both the axisymmetric

hill and the two-dimensional ridge were found on the downstream side of the hills and have values of approximately 5.6 and 6.8, respectively. These initial results give a first indication of the extent to which terrain features may significantly affect source emissions.

Because of the complex air flow over terrain and the general uniqueness of each situation, no simple definition of GEP stack height is possible as has been recommended for building and other structures. Until further studies better define the extent of the region where significant terrain influences can affect nearby sources, determination of GEP stack height in the vicinity of terrain obstacles should be made on a case-by-case basis.

2.5 Minimum Stack Height

In the case of very low structures or where there is essentially no structure to which a stack is attached, application of the 2.5 times rule may yield answers which have little or no meaning. Isolated release points may require some physical height for security, safety or other public health reasons. Excessive ground-level concentrations may result from low level releases, due to adverse meteorological phenomena in the lower few tens of meters above the surface. The specific height of this layer often called 'the surface boundary layer', varies not only with certain meteorological factors but also among the definitions used by micro-meteorologists such as Sutton (ca. 50 m)(1953), Busch (30 m or so) (1973), and others. In this layer, the vertical atmospheric structure is largely a function of thermal and mechanical turbulence generated at the surface, i.e., surface heating by the sun or cooling by terrestrial radiation, and the surface roughness caused by obstacles to air flow.

To minimize the influences of these natural atmospheric effects, one alternative is to consider that good engineering practice should not preclude the construction of stacks up to a reasonable height of 65 meters. This will certainly minimize the deleterious effects of stable and/or stagnant conditions, and allow reasonable dilution to take place in the short travel time to nearby locations by permitting a wider spectrum of atmospheric eddy sizes to act in the dispersion process significantly without contributing to problems which arise from long range transport and transformation of pollutants. It should be noted, however, that reasonable stack heights will not eliminate instantaneously high concentration peaks associated with looping plumes. Eigsti (1979) shows that emissions from stacks whose heights are less than 65 m are not likely to contribute significantly to the overall loading of sulfate in the atmosphere. However, for taller stacks, the increase in height can contribute significantly to additional sulfate formation and transport. This should also apply to other chemical transformation mechanisms in the atmosphere.

Thus, it is recommended that Equation 1 be applied unless the resulting height is less than 65 meters. If this is the case, the stack height credit allowed is equal to the actual stack height, up to 65 meters.

2.6 Porous, Rounded or Sloping Structures

It is known that wind disturbance patterns around some structures are not as great as in the case of simple idealized block structures used in the development of the GEP formula. Moreover, the possibility exists that the formula height may exceed actual GEP height for porous structures such as the unenclosed metal supporting framework or "lattice" used in some refineries and power plants, and domed, rounded or sloping structures, such

as natural draft hyperbolic cooling towers, whose shapes are aerodynamically smoother than the block structures used in the development of the formula. Presently, sufficient data do not exist, nor is the state of the analytical art sufficiently advanced to enable the establishment of a mathematical formula to calculate GEP stack height for these categories of structures. Sources seeking GEP stack height credit for the effects of downwash, wakes, or eddy effects due to porous[1], rounded, or sloping structures should conduct field studies or fluid modeling demonstrations to determine GEP stack height on a case-by-case basis.

---

[1]Sources that wish to base stack height credit on Equation 1 may do so by using only the dimensions of the "solid" structure which is "enclosed" by lattice work.

3.0 DETERMINATION OF GEP STACK HEIGHT

3.1 Initial Assumptions

GEP stack height is designed to ensure that emissions from a stack do not result in excessive concentrations as a result of aerodynamic effects from nearby structures or terrain features. Determination of excessive concentration is dependent on the 40% criterion and the NAAQS and available PSD increments as discussed in Section 1. Lower ground-level concentrations will result when: (1) the emission point is well above the disturbed flow, (2) the effluent rise is sufficiently great to keep a significant part of the effluent plume above the disturbed flow or (3) the wind direction places the stack outside the area of disturbed flow.

GEP stack height as determined by Equation 1 does not consider plume rise. However, plume rise should not be significant in the determination of GEP stack height because under high wind speeds, plume rise near the source is negligible. For most sources, even those with a relatively high exit velocity, a wind speed of 15-20 m/s will result in significantly reduced plume rise and thus increase the potential for adverse effects from downwash. Therefore, the critical conditions for determining GEP stack height for most sources are considered likely to be high winds associated with neutral atmospheric stability with little plume rise near the sources.

Sources situated within 5 times the lesser of the height or the width dimension of a structure but not greater than 0.8 km (0.5 mi) downwind from the trailing edge of the structure are presumed nearby enough to the building to be of concern in determining downwash potential. The height of the structure is measured from the ground-level elevation at the base of the stack. Procedures for calculating GEP stack height are contained in Sections 3.2, 3.3, 3.5 and 3.6. A demonstration based on fluid modeling or

field studies must be used to show the necessary stack height where Equation 1 is not applicable, e.g. porous, rounded or sloping structures. A framework for demonstrating GEP stack heights in these cases is presented in Section 3.4. The "Guideline for Use of Fluid Modeling to Determine Good Engineering Practice Stack Height" (EPA, 1980) provides specific guidance to be followed. Field studies should be designed and evaluated on a case-by-case basis since the complexities of field studies do not make it feasible to propose specific criteria.

3.2 Simple Structures

GEP stack height has been defined to be equal to the height of adjacent or nearby structures plus 1.5 times the structure height or width, whichever is less. Both the height and width of the structure are determined from the frontal area of the structure, projected on a plane perpendicular to the direction of the wind. If the structure is asymmetrical, the GEP stack height should be based on the plane projection lying upwind from the source (stack) which results in the greatest justifiable height (refer to Section 1).

In some situations the projected area may be very irregular, thus resulting in a multiplicity of scales. However, structural protuberances are seldom a significant factor in determining GEP stack height. For the purpose of determining GEP stack height, nearby is limited to 5 structure heights or widths, whichever is less, downwind from the trailing edge of the structure.

Figure 8 illustrates applications to three types of buildings. A GEP stack should have a height equal to the upper edge of the shaded regions of the vertical cross-section if the stack lies within the associated shaded region of the horizontal cross-section. Note for both the tall, thin structure

DETERMINATION OF THE IMMEDIATE VICINITY, R,
FOR THREE TYPES OF STRUCTURES

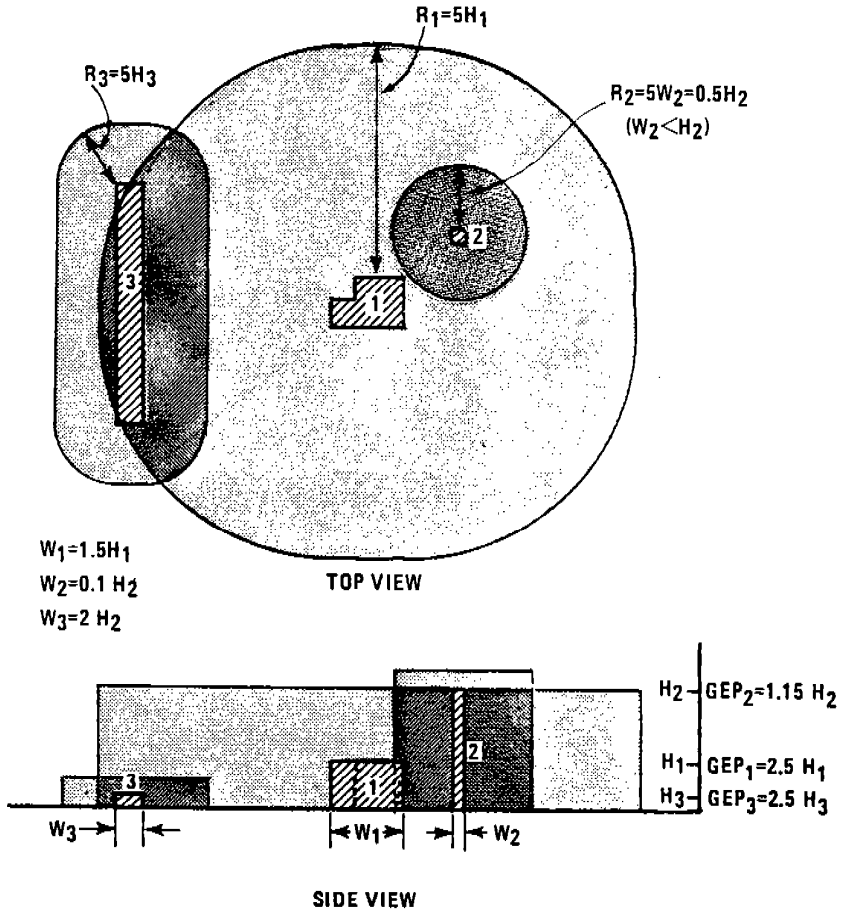

Figure 8. Determination of the GEP stack height near three types of structures.

and the short, long structure, the expected sphere of influence is less than that found for the moderately tall cubical structure.

3.2.1 Low Structures

The nearby region of adverse influence downwind, R, for a uniform low structure (one whose width all around is greater than its height) is easy to determine. It is 5 times the structure height, downwind in all directions from the trailing edge of the building. The vertical extent of disturbed flow is 2.5 times the structure height throughout the entire vicinity of the structure. Thus GEP stack height is defined as 2.5 times the structure height. This determination for a low structure is presented in Figure 9 where the sphere of influence is outlined. Figure 9 also depicts the maximum projected structural width, W, affecting each of the four given sources. Note that these projected widths are only valid for a wind which is perpendicular to the actual or the cross sectional surfaces. Since the projected width for all directions is greater than the height, the width scale is not a factor in determining GEP stack height.

3.2.2 Tall Structures

The width scale becomes the significant factor in determining GEP stack height whenever the structure is taller than it is wide. In Figure 10, the structure is tall and thin (one whose lateral dimensions are less than its height). The determination of the structural width and resulting presumed aerodynamically effected nearby region for four wind directions is presented in Figure 10. The nearby region, R, is 5 times the projected width, downwind from the trailing edge of the structure. Note that the extent is highly dependent on the wind direction. The GEP stack height for a tall structure is determined to be equal to the structure height plus 1.5 times the projected structure width. Thus, GEP based only on the side view

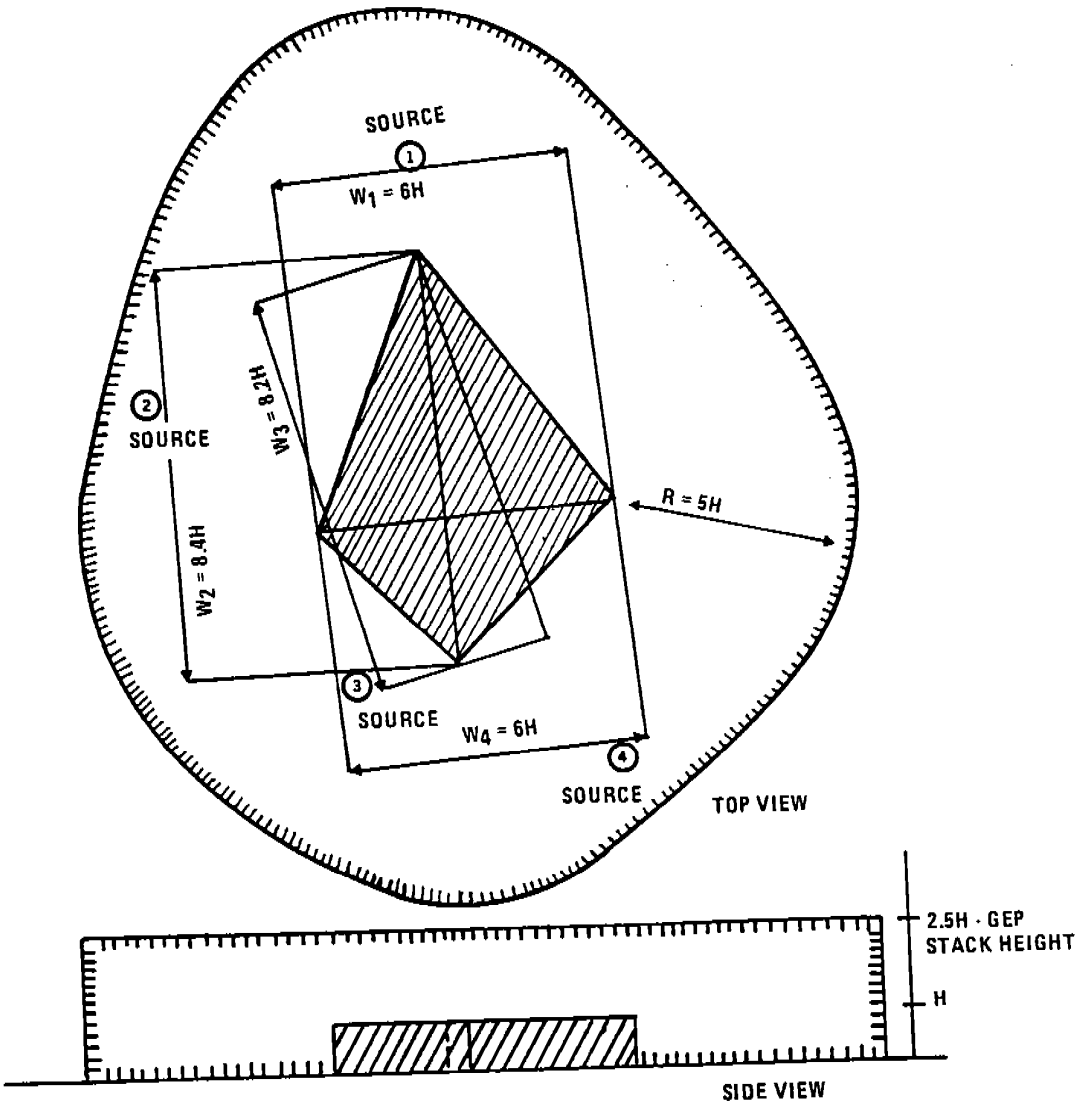

Figure 9. Determination of the maximum projected structure width and associated region of adverse influence for four stacks placed near a low structure.

DETERMINATION OF THE STRUCTURAL WIDTH
AND DOWNWIND EXTENT OF THE IMMEDIATE VICINITY
FOR FOUR STACKS PLACED NEARBY A TALL,
THIN STRUCTURE

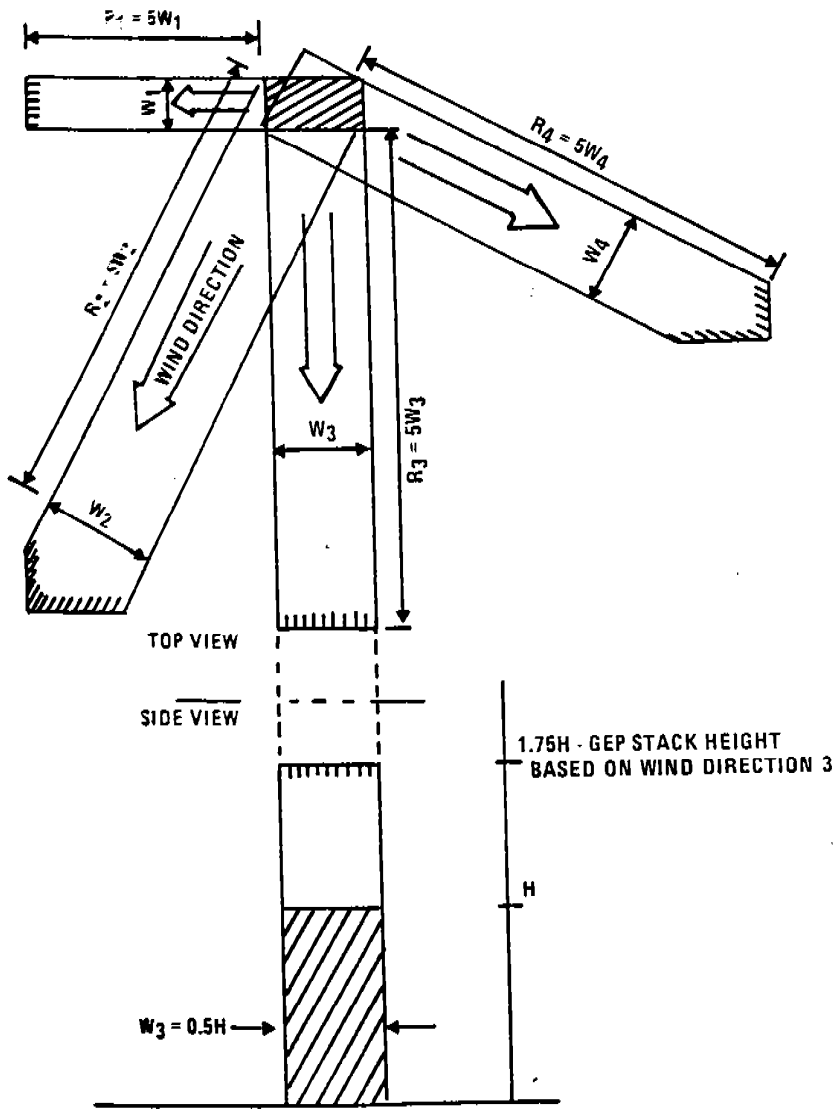

Figure 10. Determination of the projected structure width and associated region of adverse influence for four possible wind directions near a tall, thin structure.

in Figure 10 would be equal to 1.75 times the height of the structure. Since the projected width of the structure is dependent on the wind direction, all directions projecting downwind towards the source need to be assessed. The maximum allowable GEP for sources near a tall structure is then equal to the structure height plus 1.5 times the maximum projected structure width.

3.3 Complex Structures

3.3.1 Tiered Structures

Figure 11 presents a more complex, tiered structure. For this situation, tier 1 by itself has a nearby region, R, extending downwind for five heights. The addition of tier 2, which is equal in height to tier 1, causes both the vertical and downwind extent of the region of significant influence to double since the height scale is the overall height which still is less than the width. The projected area downwind of tier 3 which is placed above tier 2 has a height 4 times greater than its width, as can be seen from examination of Figure 11. However, the downwind region of influence of tier 3 extends downwind less than the influence of tier 2. Should a source be located directly downwind of tier 3, although out ~~it~~ of its influence, GEP is then based on the influence of tier 2. Note that the vertical and downwind extent of influence of tier 2 totally engulfs the influence of tier 1. However, the across flow extent is, of course, greater.

For the situation presented in Figure 11, GEP stack height is equal to GEP_3 ($1.4H_3$) for all sources downwind of tier 3 and placed within R_3. GEP for sources farther downwind, but not beyond R_2, is equal to GEP_2 ($2.5H_2$). For sources outside of the projected width of tier 2, however within the projected width of tier 1 and downwind distance R_1, the GEP stack height is equal to GEP_1 ($2.5H_1$). Other orientations of the building to the

VARIATION IN THE DETERMINATION OF THE IMMEDIATE VICINITY FOR ADDITIONS TO A TIERED STRUCTURE

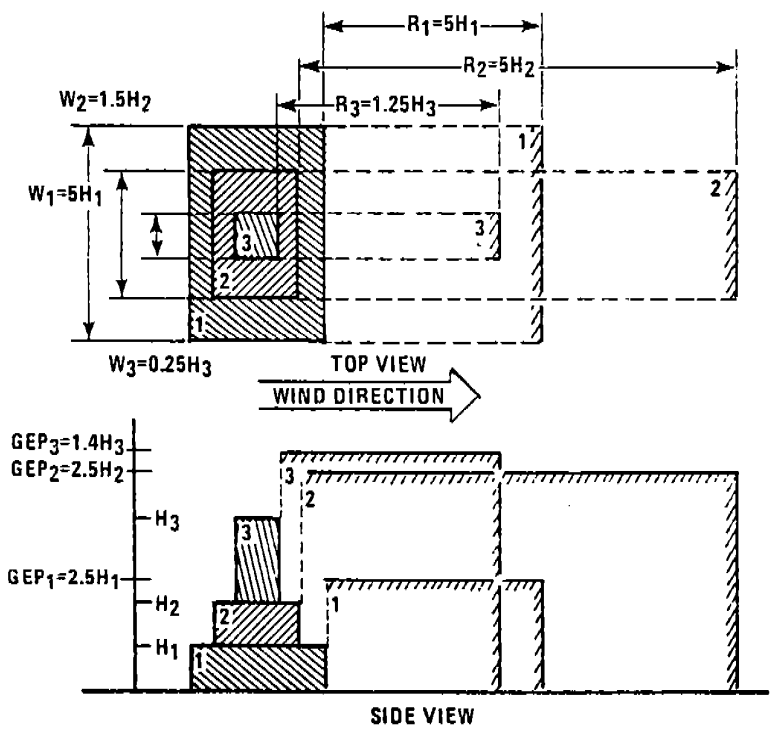

Figure 11. Variation in the determination of the region of adverse influence for additions to a tiered structure.

wind can result in different determinations of GEP stack height where the projected width is less than its height. For the building design in Figure 11, only the influences of tier 3 change the GEP determination since only its projected width is less than its height.

The influence of tiers has been assumed to be complementary. Very little information relative to such situations is found in the present scientific literature. The influence of tiers may not be exactly complementary since additional tall tiers, similar to tier 3 in the above example, may result in some streamlining of the flow around the lower tiers and thus some reduction in their effects. Since such effects are likely minimal, it is recommended that, until further evaluations are reported, the effects of tiers should be considered totally additive as presented here. A demonstration should be provided if a noncomplementary assumption is used or in situations where there is concern for additional complications.

3.3.2 Group of Structures

Figure 12 presents an evaluation of the region of adverse influence downwind of a group of structures. The top view shows the projected downwind extent for three wind directions. The effects of adding building 3 is shown as the added region of influence beyond that shown for building 2. The downwind extent of the region of adverse influence is equal to five times the height or projected width of the building, whichever is less. The influence of nearby buildings is assumed to be exactly complementary, similar to that shown for tiered structures. Where the projected widths of adjacent buildings do not overlay but whose lesser projected dimension (height or projected width) of either building is greater than the projected distance of separation, treat the gap as if it were filled by a structure equal in height to the lesser projected height. This is demonstrated in the front view. The

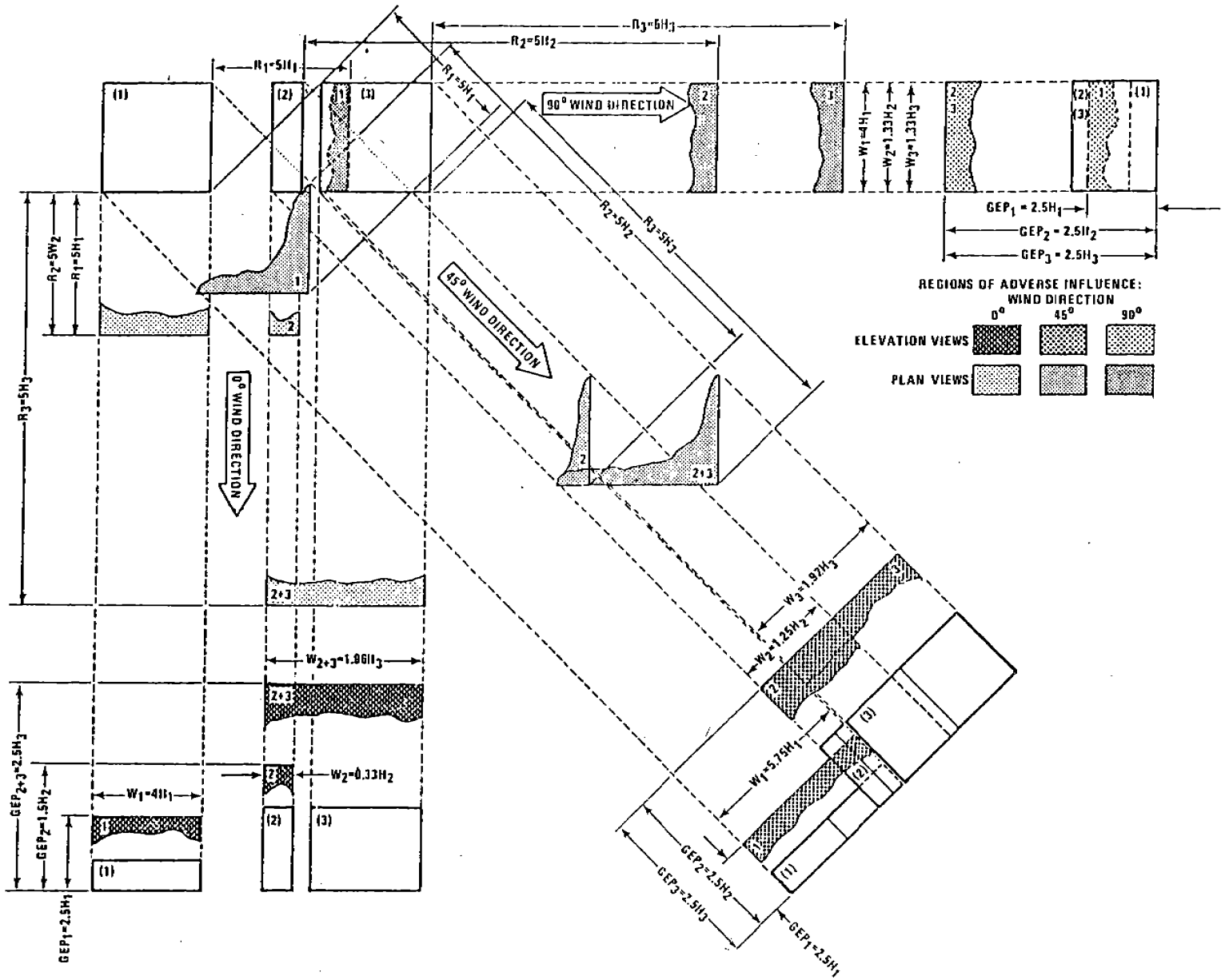

Figure 12. Determination of region of adverse influence for a group of buildings.

distance of separation between building 1 and building 2 is too large while building 2 and building 3 are assumed to be sufficiently close to be treated as a single building for purposes of determining GEP stack height. The side views show all three buildings to be simply complementary. GEP stack height based only on the front view and the side views is presented in Figure 12. As for single structures, the maximum allowable GEP stack height is equal to that resulting from an evaluation of all wind directions.

The influence of groups of buildings has been assumed to be complementary. Very little information relative to such situations is found in the scientific literature. The above general procedure is recommended until further evaluations are reported from which more specific guidance may evolve. A demonstration should be provided for special situations where support for the above assumption is desirable or in situations where there is concern for additional complications.

3.4 Framework for Demonstrating GEP Stack Height

As outlined in 40 CFR 51.1(ii), a demonstration may be required to determine GEP stack height for a source (refer to Section 1). A demonstration can be performed through fluid modeling (wind tunnel or water channel) or a comparable field study subject to the conditions discussed below. In field studies and fluid modeling simulations, a quantitative evaluation of the building and/or terrain influence on GEP stack height is a necessary part of demonstrating GEP stack height. Upon acceptance of such a demonstration, sources may base GEP stack height on the field study or fluid modeling results as described in Section 3.5. Comparable fluid modeling studies require certain similarity criteria to be considered. Discussion of similarity criteria can

be found, for example, in Snyder (1981); Snyder (1972); Sundaram, et al. (1971); Cermak (1980); and Halitsky (1968).

Modeling simulations rely on the continuing development and refinement of state-of-the-art techniques. The specific criteria and procedures for an adequate GEP modeling demonstration are presented in separate guidance documents. Specifications for such fluid modeling demonstrations are found in the "Guideline for Use of Fluid Modeling to Determine Good Engineering Practice Stack Height" (EPA, 1980). This guideline is based on a separate guideline entitled, "Guideline for Fluid Modeling of Atmospheric Diffusion" (Snyder, 1981), which reviews the fundamental principles and practical applications of fluid modeling, establishes the capabilities and limitations of fluid modeling, and also establishes EPA standards for the conduct of fluid modeling studies. EPA published a fluid modeling demonstration study for a power plant (Lawson and Snyder, 1983) that illustrates how the 1980 fluid modeling guideline should be applied. In addition, EPA has published a report entitled "Fluid Modeling Demonstration of Good-Engineering Practice Stack Height in Complex Terrain" (Snyder and Lawson, 1985) which modelers may use as guidance.

As the state-of-the-art improves, future guidance may require additional data and/or specific critical assessments. For this reason, reviewing agencies should establish a requirement that a study plan be submitted prior to the conduct of the demonstration study so that the latest EPA quality assurance procedures and guidance will be considered.

In some situations field studies may be desired in conjunction with or as support for a fluid model study. Proposed field studies should be designed and evaluated on a case-by-case basis since the complexities of field

field studies do not make it feasible to propose specific criteria. The following discussion presents, generally, the essential components for demonstrating a GEP stack height by a field study.

The cause(s) and magnitude of the disturbed flow used to justify the GEP stack height should be clearly identified. In the case of an insolated building, this can be easily accomplished by documenting the release of visible smoke at ground level and on top of the building to demonstrate the general region of influence. Effects caused by atmospheric phenomena such as oscillations in the flow and inversion breakup are not creditable toward determining a GEP stack height.

A field demonstration of GEP stack height requires experiments to determine the concentration patterns from two release points--one with the structure(s) and/or terrain; the other in the absence of structure(s) and/or terrain. This means there must be a location near the site of the source where the atmospheric flow is similar except for differences caused by structures and/or terrain near the source. A monitoring array must be arranged to clearly identify the maximum concentrations downwind of similar releases at both sites. Meteorological instrumentation must be placed upwind of both sites to show that the approaching atmospheric flow is similar. In areas where the upwind fetch at both sites is similarly homogeneous with no nearby obstructions such as buildings or elevated terrain, one may expect similar approach flows. A light wind, stable atmospheric flow is very sensitive to external influences, often resulting in great differences between even close sites. Generally, moderate to high wind speeds with near neutral stability conditions can be expected to result in the more severe downwash, wakes, or eddy effects.

3.5 Determining GEP Stack Height

Determining the GEP stack height under these regulations is required in order to set the correct emission limitations for the source. The regulation has exempted certain sources and stacks from these determinations while requiring that others perform a more rigorous evaluation including a fluid modeling demonstration. The steps to be taken in this evaluation are shown in Table 3.1; however, the discussion of how to determine the emission limitations is deferred to Section 4.

Stacks less than 65 m in height are considered de minimis. Sources with such stacks should use actual stack height in calculating emission limitations.

For stacks based on the 2.5H formula and in existence on January 12, 1979, (but after December 31, 1979), and for which all applicable permits or approvals have been obtained, reliance on the 2.5H formula must be shown. This showing includes the use of reconstructed evidence, or affidavits (as described in the regulation) that the 2.5H formula was actually relied on in designing the stack or establishing an emission limitation to ensure protection against downwash. If this showing is unsuccessful, Equation 1 must be used to determine stack height.

Sources and stacks in existence on December 31, 1970 are grandfathered and not subject to this regulation. The actual stack height is the GEP height.

Sources that sought credit for stack height before November 9, 1984 based on the aerodynamic influence of cooling towers must show actual reliance on Equation 1 as prescribed in the Guideline for Determination of Good Engineering Practice Stack Height, July 1981. The requirements for a

showing are similar to those for reliance on the 2.5H rule described above. If this showing is unsuccessful, a fluid model demonstration of GEP stack height is required.

Although sources may generally use Equation 1 to determine stack height, a demonstration may be required by the regulatory agency (i.e., EPA, the State or local air pollution control agency) for stacks greater than 65m but less than the formula height, if the agency believes that the formula is not applicable and a demonstration of the GEP stack height is necessary. Also, a demonstration may be justified where there is concern for additional complications near buildings, or to support the noncomplementary building influence assumptions discussed in Sections 3.3.1 and 3.3.2, or in connection with porous, sloping or rounded structures (discussed in Section 2.6). In these situations, it is only necessary to demonstrate equivalence to formula height by determining the stack height needed to avoid a 40% increase in concentrations.

Sources with stack height greater than 65 meters but less than the GEP height given by Equation 1, and wishing to raise the stack to that height given by Equation 1, must provide evidence that additional height is necessary to avoid downwash-related concentrations raising health and welfare concerns. This can be accomplished by either one of two methods: (1) demonstrate by fluid modeling or a comparable field study, using the existing stack and emission rate (before the stack is raised) and adding in the background air quality, that both "excessive concentration" criteria are met; or (2) show by site-specific information that the existing short stack(s) have in fact caused a local nuisance. A nuisance caused by air pollution from the stack could include widespread citizen or employee complaints (i.e. choking,

Table 3.1

Determining GEP Stack Height For Modeling Emission Limitations For Sources in Flat or Elevated Terrain

A. Stack height $\leq$ 65 m

Use actual stack height in calculating emission limitations.

B. For stacks = 2.5H and in existence prior to January 12, 1979 but after December 31, 1970.

1. Show reliance on the 2.5H formula (use reconstructed evidence or other conditions specified in the rulemaking).

2. If successful, use 2.5H height to set emission limitations.

3. Otherwise, use Equation 1 to determine GEP stack height and set emission limitations.

C. For sources and stacks in existence prior to December 31, 1970 use the actual stack height to set emission limitations.

D. For sources that sought credit for stack height before November 9, 1984, based on the aerodynamic influence of cooling towers.

1. Show reliance on Equation 1 as prescribed in EPA guidance (use reconstructed evidence or other conditions specified in the rulemaking).

2. If successful, use Equation 1 height to set emission limitations.

3. Otherwise, demonstrate by fluid modeling the stack height needed only to avoid a 40% increase in concentrations and set emission limitations.

E. Regulatory Agency discretion to require fluid modeling when Equation 1 is not acceptable (e.g. in connection with porous, sloping or rounded structures).

1. Demonstrate equivalence to formula height by fluid modeling the stack height needed only to avoid a 40% increase in concentration.

2. Use the demonstrated height or Equation 1, whichever is less, to set emission limitations.

F. Stack height > 65 m but < Equation 1

1. Use actual stack height to set emission limitations.

Table 3.1 (Cont.)

2. If a stack height increase to Equation 1 is requested, then:

2a. Demonstrate by fluid modeling or a field study[1] that both excessive concentration criteria[2] are met, using existing stack and existing emission rate, and adding in background air quality, or

2b. Show, by site-specific information, that the stack is causing a local nuisance.

2c. Determine GEP height based on Equation 1. May increase physical stack height up to this height.[3]

2d. Otherwise, use actual stack height to set emission limitations.

G. Stack height > Equation 1, wish to determine correct GEP height

1. Determine stack height based on Equation 1; or

2a. Demonstrate by fluid modeling or a field study[1] the stack height that satisfies both excessive concentration criteria[2], using applicable emission rate[4] and adding in background air quality.

2b. Select the lowest height necessary to meet the more restrictive of the "excessive concentration" criteria[2].

3. Use this physical stack height (from step 1 or 2b) to set emission limitations[3].

H. All other sources

1. Should use Equation 1 to define their GEP stack height. The emission limitations should be based on this height.

---

[1]Proposal to conduct a field study shall be reviewed on a case-by-case basis as discussed in Section 3.4.

[2]"Excessive Concentration" criteria include both an exceedance of a NAAQS or available PSD increment and 40% excess concentration, as defined in Section 1.

[3]Where some other meteorological condition is more controlling than downwash, adjust the emission rate to avoid a violation of a NAAQS or available PSD increment.

[4]The applicable emission rate is defined as that equivalent to NSPS for that source category.

stinging eyes) or property damage (i.e., soiling). If a successful demonstration is made, the stack height can be increased up to Equation 1 height and the emission limitations established at this new height. Otherwise, the existing stack height is used to set the emission limitations.

Sources, with stack height greater than the GEP height given by Equation 1, who wish to determine the correct GEP height can either determine the stack height based on Equation 1 or demonstrate by fluid modeling or a field study the correct GEP height. In conducting a demonstration, a source should use the modeled stack height, input the applicable emission rate that is equivalent to NSPS for that source category[1], and add in the background air quality as determined by procedures contained in two EPA guidance documents (EPA, 1978, 1981). After demonstrating that both "excessive concentration" criteria are met as defined in Section 1, the source must determine the lowest stack height necessary to meet the more restrictive of the two excesive concentration criteria. This lower height is the new GEP height.

All other sources, e.g. those sources not excepted or included above, can use Equation 1 to define their GEP stack height.

3.6 Modeling Terrain Effects

As discussed earlier, a GEP stack based on Equation 1 is theoretically high enough to avoid downwash, wakes, or eddy effects caused by nearby structures. However, even though the stack is tall enough, there is still the possibility of plume downwash caused by nearby elevated terrain.[2] Criteria

---

[1] However sources may on a case-by-case basis demonstrate that such an emission is not feasible for their situations and determine their emission limitations based on Best Available Retrofit Technology.

[2] Elevated terrain is defined as a setting with significant topographical complexities, e.g., topographic features exceed the GEP stack height of the source being modeled.

for determining GEP stack height for sources in elevated terrain are shown in Table 3.1 and the justification for the need to make a demonstration are the same as those for sources in flat terrain. The implementations of the model demonstration techniques are, however, different. In conducting a fluid modeling demonstration, considerations of downwash, wakes, or eddy effects of terrain features are limited to those features that can be classified as being "nearby" as that term is defined in Section 1 (i.e., not further than 0.8 km (0.5 mi) from the stack). However, that portion of a terrain feature may be considered to be nearby which falls within a distance of up to 10 times the maximum height (H_T) of the feature, not to exceed 3.2 km (2 mi) if such feature achieves a height (H_t), at or within 0.8 km (0.5 mi) from the stack, that is at least 40% of the GEP stack height (H_g) determined by Equation 1 or 40% of the 65 m de minimis height (26 m), whichever is greater. The height of the terrain feature is measured from the ground-level elevation at the base of the stack. This is illustrated in Figure 13. The nearby and distance limitations apply with respect to the terrain feature inserted and removed while fluid modeling.

The specific steps undertaken to simulate the effects of nearby terrain are provided in the document "Fluid Modeling Demonstration of Good-Engineering-Practice Stack Height in Complex Terrain," (Snyder and Lawson, 1985). A model baseline should be established by initially representing in the model all relevant terrain features beyond a distance of 3.2 km (2 mi) or 10 times terrain height (H_T), whichever is less, but excluding the nearby features, i.e., smoothing and sloping those features falling within the appropriate distance limitation to minimize their effects. To evaluate the effects of nearby terrain, these latter features are then inserted into the

model, and the resulting concentrations compared to the baseline as described in Section 3.5. Refer to Figure 14.

In summary, stack height may be increased to eliminate excessive concentrations caused by downwash due to nearby terrain. However, sources having excessive concentrations due to downwash, wakes or eddy effects caused by terrain features not classified "nearby," as defined in the regulation, may not receive credit for increasing the height of their stacks to eliminate such effects.

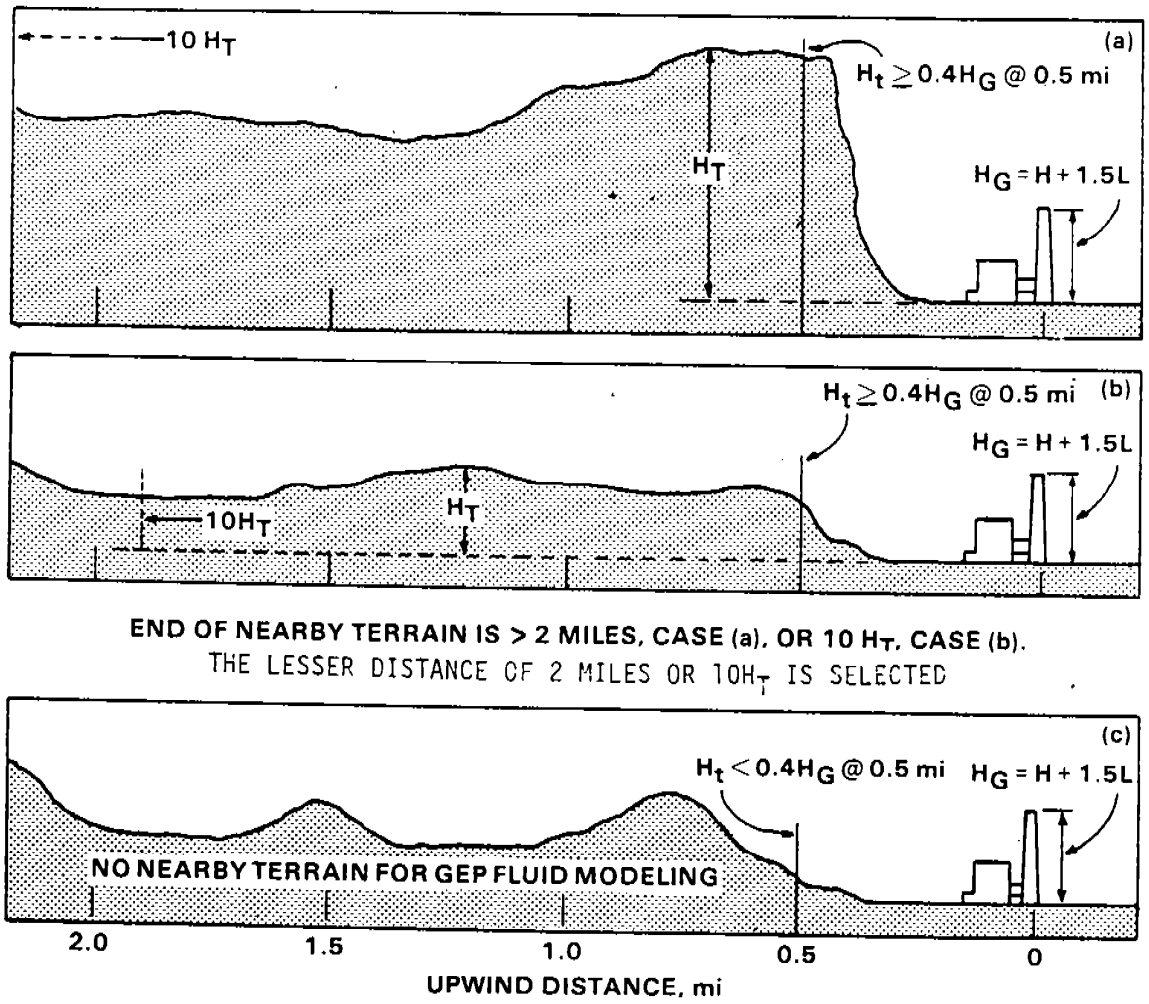

Figure 13. Examples of determining the extent of nearby upwind terrain for fluid modeling of all sources. In all cases H_t must be at least 85 ft (26 m) for any upwind terrain to be considered nearby.

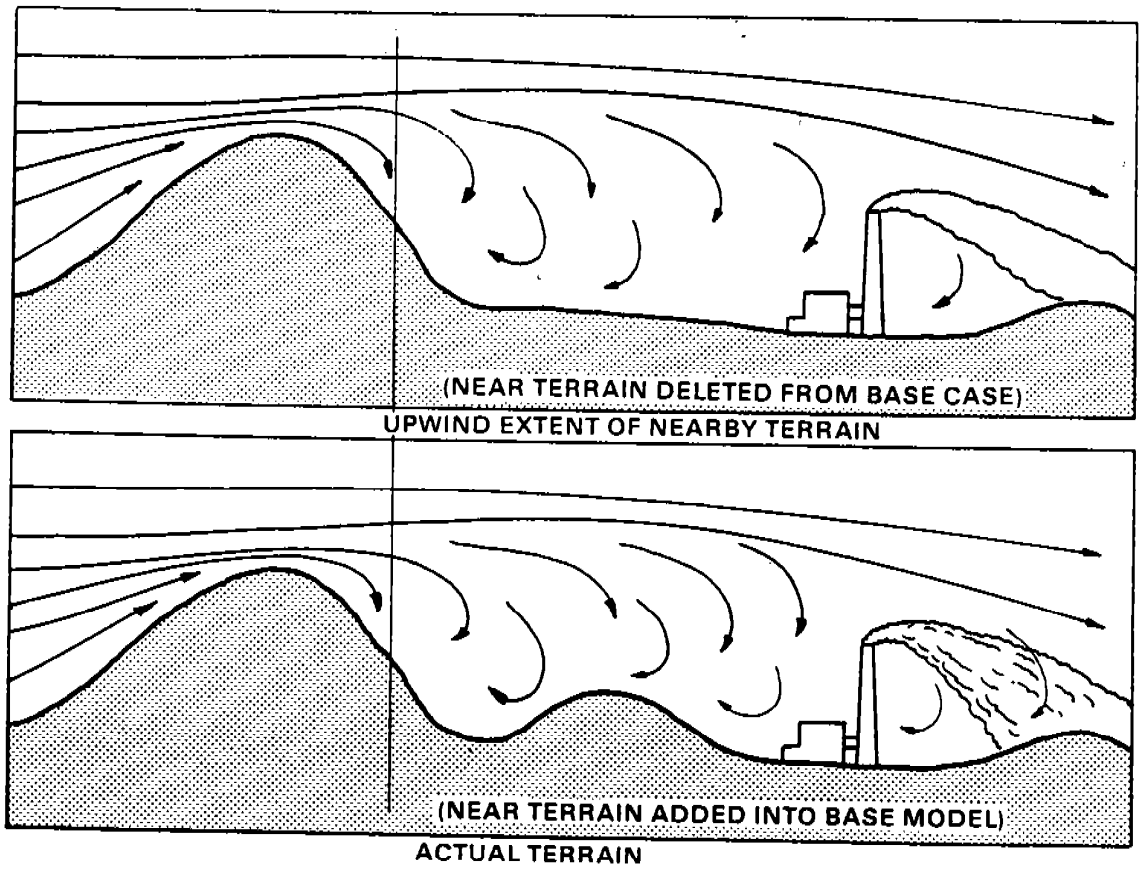

Figure 14. Simulating terrain effects in a wind tunnel.

4.0 AIR QUALITY ESTIMATES

4.1 Determining Emission Limits

Air quality dispersion modeling is used for determining if emissions from a stack contribute to exceedance of a NAAQS or applicable PSD increments. It is the intent of the stack height regulation to set a limit on the maximum stack height credit to be used in air quality modeling for the purpose of determining an emission limitation. In the event that air quality modeling shows violations of the NAAQS or applicable PSD increments, the emission rate must be reduced accordingly. No stack height credit, i.e. an increase in emission limitations, is given for that portion of an actual physical stack height greater than the GEP height. Nor can credit be given for any GEP stack unless such stack is actually constructed and put in operation. A GEP stack height based on the physical configuration of the source and any nearby structures and terrain features should be determined by the procedures in the preceding sections.

Sources with stacks less than or equal to 65 meters, should use the actual stack height to calculate the emission limitations. Refer to Table 3.1, item A. Sources with stacks equal to 2.5H and in existence prior to January 12, 1979, but after December 31, 1970, that can show reliance on the 2.5H formula may use this 2.5H height to set their emission limitations. However, if the showing is unsuccessful, sources shall use Equation 1 stack height to set the emission limitations. Refer to Table 3.1, item B.

For sources and stacks in existence prior to December 31, 1970[1], actual stack height should be used to set the emission limitations. Refer to Table 3.1, item C.

[1]According to the stack height regulation, stacks in existence prior to December 31, 1970 are grandfathered and not subject to the regulation.

Emission limitations for a source that sought stack height credit before November 9, 1984 based on cooling tower influences are set using the stack height resulting from following Table 3.1, item D. If there is a successful showing that the source has built a stack based on EPA's guidance then in effect for applying Equation 1 to hyperbolic cooling towers, then that stack height should be used to set the emission limitations. If the showing is unsuccessful, then that stack height resulting from a fluid modeling demonstration where the 40% increase in concentration criterion has been satisfied should be used to set the emission limitations.

Sources that are required by the Regulatory Agency to demonstrate through fluid modeling the equivalence of the stack height to Equation 1, must use the smaller of the demonstrated height or Equation 1 height to set the emission limitations. Refer to Table 3.1, item E.

Sources with a physical stack height greater than 65m but less than that determined by Equation 1 may use their actual stack height to set the emission limitations. Sources that are successful in demonstrating the need for a GEP stack height up to Equation 1 height may then use this GEP stack height to determine the emission limitations. A source may receive stack height credit up to formula height only if it actually raises the physical stack, not simply claim more credit for a short stack already in existence. If a source cannot demonstrate that the reason for raising the physical stack height is in fact the desire to avoid a problem caused by downwash, then the inference is a desire for more dispersion credit, which is prohibited. Refer to Table 3.1, item F.

Sources, with a physical stack height greater than the GEP height based on Equation 1, that wish to establish the correct emission limit should

input the GEP height (given by Equation 1, fluid model or field study) into an air quality model to set the emission limitations. Refer to Table 3.1, item G.

All other sources should use Equation 1 to define the GEP stack height in setting the emission limitations. Refer to Table 3.1, item H.

For all sources, specific modeling techniques have been recommended for estimating the air quality impact of these sources and determining the emission limitations (EPA, 1978, 1981). A simple screening analysis should first be conducted to eliminate from further consideration those new sources that clearly will not cause an air quality problem. Screening procedures (Budney, 1977) provide a conservative estimate of maximum concentrations, i.e., a margin of safety is incorporated to insure that maximum concentrations will not be underestimated. If a more refined analysis is necessary the analysis should be consistent with techniques recommended in the "Guideline on Air Quality Models" (EPA, 1978). The Guideline makes specific recommendations concerning air quality models, data bases and general requirements for concentration estimates.

Sources in elevated terrain should use a complex terrain screening model to determine source impact (EPA, 1978, 1981). When the results of the screening analysis demonstrate a possible violation of a NAAQS or applicable PSD increment, a more refined analysis should be conducted. Since there are no refined techniques currently recommended for complex terrain applications, a refined model should only be applied after discussion with the EPA Regional Office. In the absence of an appropriate refined model, screening results may need to be used to determine air quality impact and/or emission limits.

4.2 Treatment of Terrain

The effect of terrain elevation must be considered in routine model calculations. If the terrain is less than the GEP height, the GEP stack height should be the model input (See schematic below).

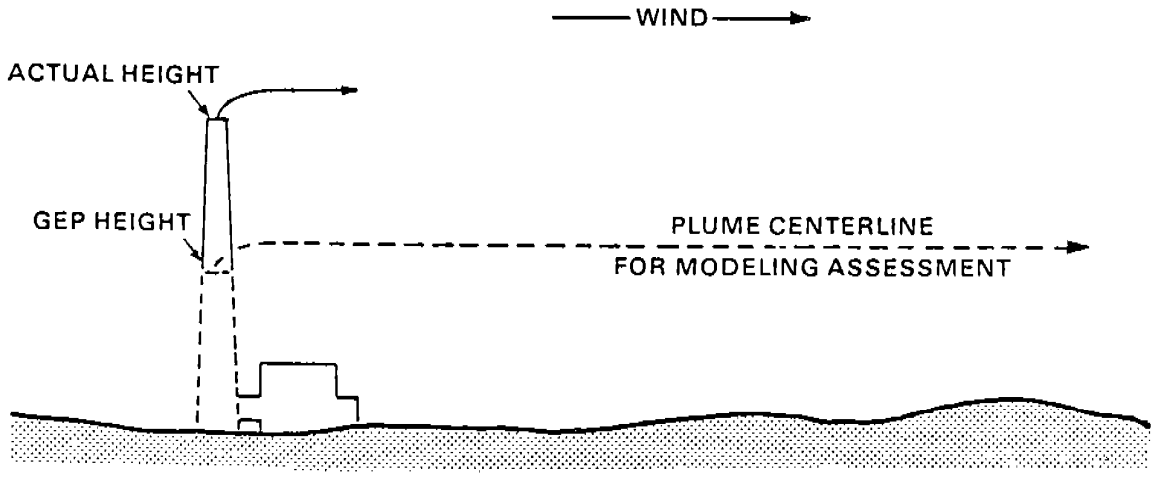

If the terrain is greater than the GEP height and is not within the definition of "nearby", there is a possibility that plume interaction with this elevated terrain will be modeled, resulting in high concentrations and violation of the NAAQS or applicable PSD increment. Stack height credit cannot be increased to avoid this terrain impaction and the emission rates must be reduced to eliminate the violation.[1]

4.3 Multiple Source Impacts

In situations where there is a significant contribution to ambient concentrations due to sources other than the one in question, first calculate the contribution from other sources (background). GEP-based emission rates should be used in conjunction with GEP or allowable stack heights as input to the model assessment. However, if emission limits have been set for a source

[1]Refer to court decision on plume impaction discussed in the preamble to the stack height regulation.

operating with less than a GEP stack height, the associated emission rate and stack height should be input to the model. Second, estimate the air quality impact of the source in question, as discussed in Section 4.1 and 4.2. Finally, add the background to the air quality impact of the source in question to estimate the total air quality impact. The emission limitation for the source in question should be determined such that the NAAQS and applicable PSD increment will be met even after natural background and the additive impact of other sources are considered. Guidance is available for estimating contributions from other sources (Budney, 1977 and EPA, 1978, 1981).

4.4 Special Situations

The term "dispersion technique" includes any practice carried out to increase final plume rise to avoid control requirements and is thus not allowable (refer to Section 1). Increasing final plume rise raises the effective release height of pollutants into the atmosphere which could result in less stringent emission limitations. Examples of practices that are not considered dispersion techniques and are thus allowable for use are given in the preamble to the stack height regulation. Sources with allowable SO_2 emissions below 5,000 tons per year are exempt from the prohibition on manipulating plume rise.

Reconstructing a facility to vent multiple flues from the same stack solely for the purpose of increasing final plume rise is considered a prohibited dispersion technique and no credit for the merged plume is allowed in setting emission limitations. Therefore, if multiple flues are to be vented from the same GEP stack using multiple liners, each flue/liner must be modeled as a separate source and their combined impact determined. This is accomplished by separately putting the temperature and volume flow

rate of each flue/liner in the air quality model along with GEP stack height and calculating the total concentration, including background, at each receptor in order to determine the emission limitations.

Credit for merging gas streams is allowed under three scenarios: (1) the source owner or operator demonstrates that the facility was originally designed and constructed with such merged gas streams; (2) after date of promulgation, demonstrate that such merging is associated with a change in operation at the facility that includes the installation of pollution controls and results in a net reduction in the allowable emissions of the pollutant for which credit is sought; or (3) before date of promulgation, demonstrate that such merging did not result in any increase in the allowable emissions and was associated with a change in operation at the facility that included the installation of emissions control equipment or was carried out for sound economic or engineering reasons, as demonstrated to EPA.

Any exclusion from the definition of "dispersion techniques" applies only to the emission limitation for the pollutant affected by such change in operation. For example, a source tears down two stacks and builds one GEP stack with an electrostatic precipitator that results in net reduction in particulate matter emissions. This source could model using stack gas characteristics resulting from merging the two gas streams in setting the TSP emission limit, but may not so model when setting the SO_2 emission limit.

REFERENCES

Batchelor, G. K., 1967: An Introduction to Fluid Dynamics. Cambridge University Press, Cambridge, (Great Britain), 325-331.

Baumeister, T., E. A. Avollone, and T. Baumeister, III, (editors), 1978: Marks' Standard Handbook For Mechanical Engineers. McGraw-Hill, New York, Chapter 18, page 16.

Beaver, S. H. (Chairman), 1954: Report of Government Committee on Air Pollution. Her Majesty's Stationary Office, CMD. 9322.

Bowers, J. F., J. R. Bjorklund, and C. S. Cheney, 1979: Industrial Source Complex (ISC) Dispersion Model User's Guide. (EPA-450/4-79-031), Environmental Protection Agency, Research Triangle Park, NC.

Briggs, G. A., 1973: Diffusion Estimation for Small Emissions. Atmospheric Turbulence and Diffusion Laboratory, NOAA, Oak Ridge, TN, (Draft) ATDL No. 75/15.

Britter, R. E., J. C. R. Hunt and J. S. Puttock, 1976: Predicting Pollution Concentrations Near Buildings and Hills. Symposium on Systems and Models in Air and Water Pollution, September 22-24, London.

Budney, L. J., 1977: Procedures for Evaluating Air Quality Impact of New Stationary Sources. Guidelines for Air Quality Maintenance Planning and Analysis: Volume 10 (EPA 450/2-77-001, OAQPS Guideline Number 1.2-029R), Environmental Protection Agency, Research Triangle Park, NC.

Burt, E. W., 1977: Valley Model User's Guide. (EPA-450/2-77-018), Envionmental Protection Agency, Research Triangle Park, NC.

Busch, N. E., 1973: On the Mechanics of Atmospheric Turbulence. In Workshop on Micrometeorology, by American Meteorological Society, Science Press, Ephrata, PA. Chapter 1.

Cermak, J. E., 1970: Laboratory Simulation of the Atmospheric Boundary Layer. American Institute of Aeronautics and Astronautics, 3rd Fluid and Plasma Dynamics Conference, Los Angeles, CA, June 29 - July 1, No. 70-751.

Cermak, J. E., 1976: Aerodynamics of Buildings. In Annual Review of Fluid Mechanics, Vol. 8, Van Dyke, M. And W. G. Vincenti (Co. Ed.), Annual Reviews, Inc., Palo Alto, CA, pp. 75-106.

Cramer, H. E., and J. F. Bowers, Jr., 1976: West Virginia Power Plant Evaluation. Prepared for U. S. EPA Region III, Philadelphia, PA.

Counihan, J., 1969: An Improved Method of Simulating an Atmospheric Boundary Layer in a Wind Tunnel. Atmospheric Environment, 3, 197-214.

Egan, B. A. 1975: Turbulent Diffusion in Complex Terrain. Lectures on Air Pollution and Environmental Impact Analysis, American Meteorological Society, Boston, MA.

Eigsti, S. L., 1979: An Assessment of the Potential Effects of Stack Height on Sulfate Formation and Sulfur Deposition. U. S. Environmental Protection Agency, Office of Air Quality Planning and Standards, Research Triangle Park, NC, 18 pp.

Environmental Protection Agency, 1978: Guideline on Air Quality Models, (EPA-450/2-78-027) Office of Air Quality Planning and Standards, Research Triangle Park, NC.

Environmental Protection Agency, 1980: Guideline for the Use of Fluid Modeling to Determine Good Engineering Practice Stack Height. (EPA-450/4-80-015) Office of Air Quality Planning and Standards, Research Triangle Park, NC.

Environmental Protection Agency, 1981. Regional Workshops on Air Quality Modeling: A Summary Report (amended) EPA Publication No. EPA 450/4-82-015. U. S. Environmental Protection Agency, Research Triangle Park, NC.

Environmental Science & Service Corp., 1981. Niles Generating Plant. Ohio Edison Company, Wind Tunnel, Good Engineering Practice Stack Height Study.

Enviroplan, Inc. and Colorado State University, 1981. Eastlake Power Plant Units 1-4 Good Engineering Practice Stack Height Physical Modeling Study. Submitted to Cleveland Electric Illuminating Company.

Enviroplan, Inc. and Colorado State University, 1981. Avon Lake Power Plant Units 6 and 7 Good Engineering Practice Stack Height Physical Modeling Study. Submitted to Cleveland Electric Illuminating Company.

Evans, B. H., 1957: Natural Air Flow Around Buildings, Research Report No. 59, Texas Engineering Experiment Station, Texas A&M College System.

Frankenberg, T. T., 1968: High Stacks for the Diffusion of Sulfur Dioxide and other Gases Emitted by Electric Power Plants, Am. Ind. Hyd. Assoc. J., 29, pp. 181-185.

Frankenberg, T. T., I. Singer, and M. E. Smith, 1970: Sulfur Dioxide in the Vicinity of the Cardinal Plant of the American Electric Power System. Proc. 2nd Int. Clean Air Cong. Washington, DC.

Halitsky, J., 1963: Gas Diffusion Near Buildings. ASHRAE (Trans.), 69, pp. 464-484.

Halitsky, J., 1963: Gas Diffusion Near Building. Meteorology and Atomic Energy - 1968, D. H. Slade (Ed.), Chapter 5-5.

Hansen, A. C. and J. E. Cermak, 1975: Vortex-Continuing Wakes of Surface Obstacles. Project Themis Technical Report, No. 29, CER75-76 ACH-JEC16.

Hawkins, J. E. and G. Nonhebel, 1955: Chimneys and the Dispersal of Smoke. J. of the Institute of Fuel, 28, pp. 530-545.

Hosker, R. P., Jr., 1979: Empirical Estimation of Wake Cavity Size Behind Block-Type Structures. American Meteorological Society 4th Symposium on Turbulence, Diffusion, and Air Pollution, Reno, Nevada,January 15-18, pp. 603-609.

House of Representatives, 1977. Report No. 294, 95th Congress, First Session. Washington, DC, p. 93.

Hoydysh, W. G., et al., 1980. Eastlake Plant Units 1-4 Wind Tunnel Model GEP Stack Height Study. Submitted to The Cleveland Electric Illuminating Company.

Huber, A. H. and W. H. Snyder, 1976: Building Wake Effects on Short Stack Effluents. Third Symposium on Atmospheric Turbulence Diffusion and Air Quality, Raleigh, NC. October 19-22, pp. 235-241.

Huber, A. H., W. H. Snyder, R. S. Thompson, and R. E. Lawson, Jr., 1976: Stack Placement in the Lee of a Mountain Ridge. U. S. Environmental Protection Agency, EPA-600/4-76-047, Research Triangle Park, NC.

Huber, A. H., 1977: Incorporating Building/Terrain Wake Effects on Stack Effluents. AMS-APCA Joint Conference on Applications of Air Pollution Meteorology, Salt Lake City, Utah, November 29 - December 2, pp. 353-356.

Hunt, J. C.,C.J. Abell, J. A. Peterka, and H. Woo, 1978: Kinematical Studies of the Flows Around Free or Surface Mounted Obstacles; Applying Topology to Flow Visualization. J. Fluid Mech., 3, Part 1, 179-200.

Johnson, F. G., and D. T. Mage, 1978: Plume Dispersion in Complex Terrain. Presented at the Annual Meeting of the APCA, Houston, Texas, paper No. 78-73.10.

Lawson, R. E. Jr., and W. H. Snyder, 1983. Determination of Good-Engineering-Practice Stack Height: A Fluid Model Demonstration Study For A Power Plant, EPA 600/3-83-024. U S. Environmental Protection Agency, Research Triangle Park, NC.

Lawson, R. E. Jr., 1984. Effect of Terrain Induced Downwash on Determination of Good-Engineering-Practice Stack Height. U.S. Environmental Protection Agency, Research Triangle Park, NC.

Lord, G. R., W. D. Baines, and H. J. Leutheusser, 1964: On the Minimum Height of Roof-Mounted Chimneys, Results of an Exploratory Wind-Tunnel Study. Report TP-6049, Technical Publication Series, Dept. of Mechanical Engineering, University of Toronto.

Lucas, D. H., 1972: Choosing Chimney Heights in the Presence of Buildings. Proceedings of the International Clean Air Conference, Melbourne, Australia, May 15-18, pp. 47-52.

Meroney, R. N. and B. T. Yang, 1971: Wind-Tunnel Study on Gaseous Mixing Due to Various Stack Heights and Injection Rates Above an Isolated Structure. USAEC Report No. COO-2053-6.

Peterka, J. A. and J. E. Cermak, 1975: Turbulence in Building Wakes. Fourth International Cnference on Wind Effects on Buildings and Structures, London, United Kingdom. Colorado State University Report No. CPE 74-755, AP-JEC 34.

Peterson, R. L., 1982. Building Downwash and Optimum Stack Height Assessment for Dallman Units 31 and 32. Vol. 1. Submitted to Springfield City Water, Light and Power Department.

Peterson, R. L., and J. E. Cermak, 1979. Wind Tunnel Study of Downwash at the Bay Shore Power Station. Submitted to the Toledo Edison Company.

Robins, A. G. and I. P. Castro, 1977: A Wind Tunnel Investigation of Plume Dispersion in the Vicinity of a Surface Mounted Cube-1. The Flow Field, II. The Concentration Field. Atmospheric Environment, 17, pp. 291-311.

Scorer, R. S., 1968: Air Pollution. Pergamon Press, Oxford, England, pp. 107-123.

Snyder, W. H., 1972: Similarity Criteria for the Application of Fluid Models to the Study of Air Pollution Meteorology. Boundary-Layer Meteorology, 3, 113-134.

Snyder, W. H. and R. E. Lawson, Jr., 1976: Determination of a Necessary Height for a Stack Close to a Building--a Wind Tunnel Study. Atmospheric Environment, 10, 683-691.

Snyder, W. H., 1979: Testimony on Behalf of the U. S. Environmental Protection Agency at the Public Hearing on Proposed Stack Heights Regulations, May 31, 1979.

Snyder, W. H., 1981: Guideline for Fluid Modeling of Atmospheric Diffusion (EPA-600/8-81-009). U. S. Environmental Protection Agency, Environmental Sciences Research Laboratory, Research Triangle Park, NC.

Snyder, W. H., and R. E. Lawson, Jr., 1985. Fluid Modeling Demonstration of Good-Engineering-Practice Stack Height in Complex Terrain, EPA 600/3-85-022. U.S. Environmental Protection Agency, Research Triangle Park, NC.

Sporn, P. and T. T. Frankenberg, 1966: Pioneering Experience with High Stacks on the OVEC and American Electric Power Systems, Presented at the International Clean Air Congress, London, Paper No. IV/9.

Sundaram, T. R., G. R. Ludwig, and G. T. Skinner, 1979: Modeling of the Turbulence Structure of the Atmospheric Surface Layer. American Institute of Aeronautics and Astronautics, 9th Aerospace Sciences Meeting, New York, NY, No. 71-136.

Sutton, O. G., 1953: Micrometeorology, McGraw-Hill, NY.

Sutton, O. G., 1960: Discussion before the Institute, in London, 23.d, May 1960. J. Institute of Fuel, 33, 495.

Ukeguchi, N., H. Sakato, H. Okamoto, and Y. Ide, 1967. Study on Stack Gas Diffusion. Mitsubishi Technical Bulletin No. 52.

Williams, D. H., Jr., and J. T. Dowd, 1969: Design and Construction Features of the 1600 MW Mitchell Plant. Combustion, August, 19-23.

Woo, H. B., J. A. Peterka, and J. E. Cermak, 1976: Wind-tunnel Measurements in the Wakes of Structures, Technical Report for NASA Marshall Space Flight Center, NASA CR-2806, Colorado State University Report No. CER75-76HGCW-JAP-JEC40.

APPENDIX A

ANNOTATED BIBLIOGRAPHY

Sherlock, R. H. and E. A. Stalker, 1940: The Control of Gases in the Wake of Smokestacks. ASME Journal, 62, 455-458.

A wind-tunnel investigation was used to determine whether an addition of the height of the existing stacks would prevent downflow of stack gases into the area surrounding the Crawford Station of the Commonwealth Edison Company, Chicago. An additional study of the nature and cause of the behavior of the gas in the wake of smokestacks is reported. The turbulent region immediatly adjacent to the downstream surface of the stack was found to cause plume downwash. If the gases thus brought down come within the influence of the turbulence flow over the roof of the building, they were then quickly brought to the ground behind the building.

Zero downwash into the wake of the smokestack was observed when the stack gas exit velocity was greater than twice the wind velocity. Downwash was approximately one stack diameter below the top of the stack when the stack gas exit velocity was only twice the wind velocity. The model study of Crawford Station demonstrated the need for a stack increase of 50 feet to prevent downwash from any direction, provided that the gas velocity is high enough to prevent the first step of downwash. This additional increase results in the stack being approximatley 2.5 times the highest part of the building structure.

Davidson, W. F., 1959: Studies of Stack Discharge Under Varying Conditions. Combustion, 23(4), 49-51.

The problem encountered in designing stacks for the new Astoria Station in New York City is reviewed. Design of the stack to have a height greater than 2.5 times the height of the power station is stated as a long time recognized "rule of thumb". However, the author believes that, despite the importance of this factor, except for stacks of limited height and the number of investigations made, it is still impossible to give any rules or criteria that can be used with reasonable assurance to predict the stack performance of a new station. Thus, carefully planned wind-tunnel tests seem to be required. In the case of Astoria Station, increase in stack height was originally limited by nearby airport runways. A wind-tunnel model was tested to determine the necessary exit gas velocity to provide a sufficient plume height to minimize adverse building effects. A special stack nozzle was designed to keep velocity of the exit gas equal to the full load parameter regardless of the actual load.

Strom, G. H., 1952: Wind-Tunnel Techniques Used to Study Influence of Building Configuration on Stack Gas Dispersal. Industrial Hygiene Quarterly, 13, 76-80.

Wind-tunnel experimentation is presented as a research tool that has yielded answers difficult, if not impossible, to obtain by other means. Stack gas dispersal in the presence of buildings and other nearby structures is given as the most frequently investigated problem in the wind tunnel. Wind-tunnel modeling is suggested when use of empirical rules for stack height such as requiring a stack to be 2.5 times the building may lead to unnecessarily high and costly structures. Discussion of wind-tunnel modeling methods and criteria then follow.

Beaver, S. H. (Chairman), 1954: Report of Government Committee on Air Pollution. Cdm. 9322. Her Majesty's Stationery Office.

A committee was appointed in July, 1953, with the following terms of reference:

> "To examine the nature, courses and effects of air pollution and the efficacy of present preventive measures; to consider what further preventive measures are practicable; and to make recommendations."

Discussion of desirable stack height is taken from Appendix VI.

APPENDIX VI

The Influence of Chimney Design and Height on the Dispersion of Flue Gases From Industrial Chimneys

Memorandum by the Industrial Sub-Committee

INTRODUCTION

The original function of high chimneys was to create draught for the furnaces. With the introduction of mechanically created draughts early in the century, many factories were equipped with only short chimneys and as a consequence smoke dispersal was not good. More recently, however, there has been a trend towards use of high chimneys in order to improve dispersion by discharge into the higher levels of the air.

We have found that the information on a chimney design and height and the effect of chimney height on probable conditions on the ground to the lee of the chimney is widely scattered and in general inaccessible to industrial engineers. We have therefore felt it necessary to go into the subject in some detail in this appendix. The following is a summary of the best informed opinion at present, but further investigation may cause these opinions to be revised.

1. Down-draught

When a wind blows across a building or a hill a down-draught is created on the lee side. (1) It is important that chimneys should discharge their smoke high enough for it to escape these down-draughts if possible.

A rule used successfully for about 20 years by the Electricity Industry is that the height of a chimney shall be at least 2-1/2 times the height of the highest adjacent building. When the chimney is sited in hilly country or among buildings which make it impracticable to apply the "2-1/2 times" rule, wind tunnel tests on models may be necessary to determine where to site the chimney and how high to make it to avoid down-draughts. Pending further research on the subject, a good working rule for low buildings is to make the chimney not less than 120 feet high -- though discretion must of course be exercised for small installations.

2. Down-wash

Down-wash is the drawing downward of chimney smoke by the system of stationary vortices or eddies that form in the lee of a chimney when a wind is blowing. If the velocity of emission of the smoke is not great enough to overcome down-wash some of the smoke will be drawn by these eddies down into the down-draughts of the buildings beneath.

The down-draught will then carry the smoke to the ground. Experiments have shown that down-wash will not occur if the velocity of emission is sufficiently high. It is clear to us that further research on the design of chimney mouths is required.

Reference (2) gives a graph showing for a given wind speed the minimum velocity of emission for avoiding down-wash.

3. Chimney height and dispersal of smoke and gases

At whatever height smoke is discharged, gravity will eventually bring the larger particles of dust and soot to the ground. Moreover, because of the natural turbulence and mixing of the atmosphere, a proportion of the finer particles and gases in the smoke will reach the ground, although their motion is unaffected by gravity. The higher the point of discharge the greater will be the dilution of the gases and dust by the time they reach the ground.

Corby, G. A., 1954: Airflow Over Mountains: A Review of the State of Current Literature. Quart. J. Roy. Met. Soc., 80, 491.

The work of J. Forchtgott, who gathered about 35 different sets of observations involving five different mountain ridges located in Bohemia is reviewed. Mountain airflow is classified into four main types: (1) undisturbed streaming, (2) standing eddy streaming, (3) wave streaming, and (4) rotor streaming. The case of standing eddy streaming corresponded to the situation of boundary layer separation at the ridge apex with cavity formation in the lee. This type of flow is reported to have been observed frequently. Forchtgott implied that this situation was predominant under moderate wind speed and wind shear conditions. Even for the cases with smooth waves above, some form of turbulent wake was found in the lee of the ridge. No discussion of the extent of the region of modified airflow is presented.

Hawkins, J. E. and G. Nonhebel, 1955: Chimneys and the Dispersal of Smoke. J. of the Institute of Fuel, 28, 530-545.

To avoid parts of a smoke plume being blown rapidly to the ground by local disturbances of the wind, the authors report that it is necessary to choose minimum heights of chimney and exit velocities of flue gases which are related to the height of surrounding buildings, diameter at chimney and local ground contour. Disturbances of the atmospere set up by the wind flowing past the chimney and over buildings can, under certain circumstances, draw the smoke rapidly to the ground so that the efficiency of the chimney as a smoke disperser is much impaired. The region of so-called "down-draughts" is stated to stretch from the top of the windward face of the building, rise to about twice the building height and stretch for about six times the height downwind of the building. These dimensions are stated to be approximate and to increase with cross-wind width of the building. Also similar effects occur in the lee of hills.

It is reported that a committee appointed by the Electricity Commissioners (Great Britain) proposed the rule that, to discharge flue gas clear of down-draughts, chimneys should be 2.5 times the heights of the highest adjacent building. "This rule has been used successfully by the electricity generating industry during the last 20 years, although there is some evidence that at high wind speeds cool gas plumes can be brought down by down-draught even though the chimney height satisfies the 2.5 times rule." The usefulness of the wind-tunnel tests as an indication of how high the chimney height should be to avoid down-draught, in difficult cases is stated. For large plants in complicated locations, advice is given to obtain confirmatory data by observation of the spread of smoke from smoke generations and observations of the trajectories of "zero-buoyancy" balloons. It is noted that when a chimney is discharging into a region of down-draughts and turbulence behind a building, changes in the velocity of emission or temperature of the flue gas as it emerges from the chimney will make little or no difference to conditons on the ground. The work of Sherlock and Stalker (1950) is referenced in determining the necessary exit velocity to avoid the drawing-down of the smoke plume by the chimney wake. Also stated is the likelihood that a more intense wake-region will occur for a square-shaped chimney in comparison to the circular chimney.

Scorer, R. S., 1955: Theory of Airflow Over Mountains: IV-Separation of Flow from the Mountain Surfaces. Quart. J. Roy. Met. Soc., 81, 340-350.

According to the author, the flow separation point is stationary when there is a salient edge at the top of a hill or ridge. Numerous, but limited, field studies relating to the zone of recirculation and instances of intense mixing and general down-draughting in the leeward regions of ridges are cited. Details are insufficient to draw firm conclusions relating to formation of separated flows. No specification of the size of the region modified is given. Three types of flow separation in mountainous areas are discussed. These are (1) air-mass (i.e., valley flow independent of the flow aloft), (2) two-dimensional aerodynamic type (i.e., flow over a ridge), and (3) three-dimensional aerodynamic type (i.e., flow around an isolated peak). In general, the influences of a three-dimensional hill are reported to be less than that of a two-dimensional ridge. Also, katabatic winds tend to reduce the likelihood and size of the region of separated flow, whereas anabatic winds should enhance the size of any region.

Evans, B. H., 1957: Natural Air Flow Around Buildings. Research Report No. 59, Texas Engineering Experiment Station, Texas A&M College System.

The shape and size of the downwind eddy caused by the model building was determined in a wind tunnel study for nearly two-hundred variations of the basic building shape. The downwind eddy was defined as the area between the building and the point downwind of the building where some particles of the air close to the ground are found to flow upwind toward the building. Smoke patterns were used to determine the observed dimensions of the eddy. The shape of the building, the roof type, the position of openings, and the orientation with repsect to the wind, were all found to have an effect on the air flow over the building. Several significant findings are reported. It was found that, regardless of the height of the building, the pattern of the air going over the top of a tall building appeared the same. For pitched roofs, the depth of the downwind eddy increased due to the increase in the height of the building. When the building was extended in the downwind direction, the depth of this downwind eddy decreased. When the width of the building (perpendicular to the wind direction) was increased from one times its height to eight times its height, the downwind depth of the eddy increased from 2 to 5.25 times its height. As the width of the building was further increased to 28 times its height, the downwind depth of the eddy increased at a somewhat smaller rate to 8.75 times its height.

Scorer, R. S., 1959: The Behavior of Chimney Plumes. Int. J. of Air Pollution, 1, 198-220.

The 2.5 times rule concerning chimney heights is presented as being a well-known commendable rule because it is comprehensible as a practical working rule: it has no precise theoretical justification, and if experience proved it to be inadequate it could be changed by Act of Parliment! It is also argued that architects should accept the chimney heights necessary for the proper dispersal of pollution as a requirement and design buildings with the chimney as an integral part instead of as an undesirable appendage. Also in the lee of a cliff there may be eddies into which, if a chimney is sited in the downdraught of the eddy, the plume may be carried down to the ground bodily. This is more serious than being diffused down by ambient turbulence. A case at Hope Cement Works near Sheffield is discussed. A problem of downdraught was solved by installing a 150 meter chimney which reaches above the eddies downwind of the nearby hill.

Nonhebel, G., 1960: Recommendations on Heights for New Industrial Chimneys. J. Institute of Fuel, 33, 479-495.

A review of the present state of knowledge and experience, and recommendations are put forward as the basis of discussion between industrialists and those responsible for the administration of the Clean Air Act of 1956. This technical review was felt necessary since no detailed technical advice had so far been issued by any governmental department to assist those frequently faced with difficulty in deciding the height of chimney required under the provisions of this Act.

Appendix VI of the Beaver Report (1954) is referenced as providing guidance on technical considerations governing the height of chimneys. Where a chimney rises from or is adjacent to a high, large building, the recommended height is stated to be at least 2.5 times the height of the building. For small plants (reference to very low buildings appears to be intended) the Beaver Report (1954) makes the recommendation that chimney heights be not less than 120 feet high. The author goes on to point out that, where there is a choice in the orientation of a long building to which is attached a chimney, the longitudinal axis should be at right angles to the prevailing wind. It is suggested that when a chimney of a large plant is to be built among a group of high buildings which makes it costly to apply the "2.5 times rule," the only satisfactory solution is to make tests with models in a wind tunnel to determine its minimum height and its position with respect to the buildings. For small installations where the chimney plume is not expected to be seriously affected by downdraughts exerted by a neighboring building, a sliding scale of minimum stack height from 50 feet to 120 feet for plants with steam output up to 33,000 lb/hr is given. This minimum height is suggested to insure adequate dispersal of flue gases and is based on specific estimates of maximum desirable ground-level concentrations. A stack gas discharge velocity of 1.5 times the wind velocity is referenced as sufficient to keep the centerline of the plume from being drawn below the chimney top. The impracticalility of achieving the necessary discharge velocity in relatation to very high wind velocities is noted as not too important since dispersion of the gases is increased under such conditions. It is suggested that consideration be given to increasing the velocity of the exit gas by addition of aerodynamically designed nozzles to the chimney top.

Sutton, O. G., 1960: Discussion before the Institute, in London, 23.d, May 1960. J. Institute of Fuel, 33, 495 (comment).

It is pointed out that the 2.5 times rule be strictly applied only to a building which is very long across wind, and only near the central point. Sutton believes the origin of the rule was deduced by Sir David Brunt from W. R. Morgan's study of the height of disturbances over a long ridge, in an investigation into the disaster of the airship R. 101; if a wind were blowing perpendicular to the longside of a building, the disturbances should extend upwards to about 2.5 times the height of the roof. Another significant point raised by Sutton was that, since it is impossible to take every factor into account in the mathematics of atmospheric turbulence, the only thing to do is look at a situation with the aid of scaled-down models.

Scorer, R. S. and C. F. Barrett, 1962: Gaseous Pollution from Chimneys. Int. J. of Air and Water Pollution, 6, 49-63.

The wake region of the building is given by a vertical circular cylinder centered on the building of height 2.5 times the height of the building and of horizontal radius equal to 3.5 times the width of the building. For a building whose width is less than its heights, the wake region is of height 2.5 times the maximum width.

Skinner, A. L., 1962: Model Tests on Flow from a Building Ventilation Stack. Atomic Energy Establishment, Winfrith, Report AEEW-W 227.

Wind tunnel tests were conducted on a model of a building to assess the minimum requirements for a stack which would effectively disperse the ventilation air clear of the building wind eddies and also avoid recirculation into the inlet grille, A stack 2.25 times the average roof height was found to be just sufficient.

Davidson, B., 1963: Some Turbulence and Wind Variability Observations in the Lee of Mountain Ridges. J. Appl. Meteor., 2(4), 463-472.

The results of a number of balloon releases made in two valleys in Vermont are reported. Balloon releases were made at several positions along the sides of ridges that had approximately 20 degree slopes. Balloon paths were determined using theodolites. The limited results could not be used to confirm a point of separation of the extent of a leeward cavity region. The extreme turbulence generated in the lee of the ridges, however, appeared to be dissipated at most elevations at a distance of 4 to 6 ridge heights downind.

Thomas, F. W., S. B. Carpenter, and F. E. Gartnell, 1963: Stacks--How High? JAPCA, 13(5), 198-204.

TVA experience has demonstrated that when stacks are less than twice the height of the main powerhouse structure, the plume may, during high velocity wind, be caught in the turbulent vortex sheath and brought to the ground level in relatively high concentrations very near the plant and sometimes re-enter the building air supply. Also, extensive wind-tunnel tests are stated to have demonstrated that downwash does not pose a problem where the stack height is at least 2.5 times the height of the powerhouse or other nearby structures and appropriate efflux velocities are provided.

Buettner, K. J. K., 1964: Orographic Deformation of Wind Flow. University of Washington, Seattle, Washington. Prepared for U.S. Army Electronics Research and Development Laboratory, Fort Monmouth, New Jersey, under Project No. 1AO-11001-B-021-01, Contract No. DA 36-039-SC-89118, 70 p.

The general features of flow over a ridge are treated theoretically and experimentally. A ridge station was constructed on the lee side of the Ipsut Pass area of Mount Rainier National Park in Washington as part of a study of the effect of terrain obstacles on the fallout of particulate matter through the atmosphere. Tracer particles of zinc sulfide were released and collected. Data were collected for 5 days during which the airflow approach was perpendicular to the ridge. During the period of experimental set-up, only light to moderate winds were observed. The most common wind field occurrence is reported as a "Vortex sheet flow" with the airstream separating from the ridge top and forming a wake zone in the lee of the ridge. For this flow, the wind field was constant above and zero below a plane representing the wake zone. Only a small amount of particulate penetrated down through the horizontal vortex sheet. A contaminant released in the calm zone is reported to meander in an unpredictable manner. Previously a lee eddy with the main airstream moving first horizontally away from the ridge, then down, and then up again close to the valley bottom was visually observed. At this site, such a flow pattern was believed to exist only for strong winds. Laminar flow complicated by thermal winds is reported to occur when stable settled conditions prevail and the gradient wind at ridge level was less than 6 knots (3.1 meters per second).

Eimern, J., R. Karschon, L. A. Razumova, and G. W. Robertson, 1964: Windbreaks and Shelterbreaks. Word Meteorological Organization Technical Note No. 59.

Part of this report summarizes the literature on the influence of shelterbelts on air flow. The region leeward of shelterbelts is reported to have reduced winds, and a degree of turbulence and eddying of the flow in the lee. According to one reference, the air flow is affected up to even three or four times the height of the belt.

Most of the literature is concerned only with defining the downwind extent of the region of reduced winds. The literature offers a wind range of distances. It is reported that, according to West European, North American, and Russian experiences, the rule of thumb applies that the shelter zone extends to 30 times the obstruction height. However, for a wind reduction of 20 percent and more, the effect is noted to only 20 times the height. Moreover, the extent is very dependent on the permeability, shape and width of the belt, roughness of the ground surface, thermal stratification of the air. No discussion defining the vertical extent that shelterbelts can effect stack effluents is given.

Lord, G. R., W. D. Baines, and H. J. Leutheusser, 1964: On the Minimum Height of Roof-Mounted Chimneys, Results of an Exploratory Wind-Tunnel Study. Report TP-6409, Technical Publication Series, Dept. of Mechanical Engineering, University of Toronto.

Wind-tunnel tests of smoke emission from roof-mounted chimneys on both block-type and pyramidal structures are described. The tests were performed in a constant velocity low turbulence wind field. The wind velocity was equal to the stack emission speed. Four conditions defining a minimum stack height are given, each corresponding to a different degree of plume distortion by the structures. For a given stack location, building configuration, and wind direction, the height of the stack necessary to meet each of the four conditions is reported.

A discussion of building wake effects is included. The point is made that, even if the source is above the wake, the effluent may later enter the region of influence. At several building heights downstream, the turbulent region is stated to be about twice the building cross-section. For the tests, the stack was placed over the center of the building. The vertical extent of building influences was found to scale with the building width for tests where the building height is greater than its width. The height above the building of the stack at which smoke began to be entrained to the stagnant wake of the building was 0.5 times the building width. For the tests when the building width was greater than the building height, the vertical extent of the building influences were similar to above definitions, however, with the height scale replacing the width scale.

Moses, H., G. H. Strom, and J. E. Carson, 1964: Effects of Meteorological Engineering Factors on Stack Plume Rise. Nuclear Safety, 6, 1-19.

This paper contains a review and disucssion of several reports concerning desirable stack height near buildings and terrain. Movies of smoke flow patterns over buildings with small stacks at Argonne National Laboratory were said to illustrate "cart wheels" forming on the lee side with a diameter several times the height of the building and thus providing high concentrations of contaminant. The wind-tunnel studies of air flow around buildings by Evans (1957) Halitsky (1962) and Strom (1962), are discussed. The likely origins of the 2.5 times rule of thumb, which has been used by the British Electricity Industry since the 1930's is presented in light of comments of Sutton (1960). It is reported that the Dutch require that a stack must only be 1.5 times the height of the highest building in the neighborhood. It is concluded that no elementary rule, such as a 1.5 or 2.5 times rule, can be applied to all situations. The air flow in mountainous areas is stated to be quite complicated with terrain irregularities located many stack heights upwind and downwind influencing plume motions. It is suggested that, whenever a potential pollution problem results from an effluent emitted by a stack located in all but perfectly uniform terrain, wind-tunnel studies should be considered.

Gloyne, R. W., 1965: Some Characteristics of the Natural Wind and Their Modification by Natural and Artificial Obstructions. Scientific Horticulture, XVII, 7-19.

Some characteristics of wind field modification by natural obstructions are reported. An eddy flow 2 barrier heights in vertical extent and 10 to 15 barrier heights in horizontal extent to the leeward side of a "near solid" barrier was diagrammed. At ground level, the region of distubed flow extended to about 30 barrier heights. Downwind of a steeply sloped, wooded hill with a wind blowing at right angles to its length, the disturbed flow is reported to also extend downwind to about 30 times its height. Additional discussions relevant to wind modifications were also presented, and the point is made that each case must be assessed separately. Slope angle and thermal stability and wind speed were influential factors in determining the extent of terrain induced disturbances.

Jensen, M., and N. Frank, 1965: Model-Scale Tests in Turbulent Wind. Danish Technical Press, Copenhagen.

A large number of systematic wind-tunnel studies of concentration downwind from an isolated chimney and a chimney on a house are reported. An evaluation of the data indicates some building influence even for a stack height three times the house height.

Halitsky, J., G. A. Magony, and P. Halpern, 1966: Turbulence Due to Topographical Effects. New York University, New York, Geophysical Laboratory Report No. TR-66-5, 75 p.

Comparisons between the author's wind tunnel model results and Davidson's (1963) field observations in the lee of Green Peak, Vermont are reported. Best agreement resulted for the higher model wind speeds suggesting that tests of this type be run with a minimum ridge height Reynolds number of 1×10^5. The field observations of a cavity and wake flow generally fitted the model test results. The boundary layer and upstream turbulence conditions were not simulated in the wind tunnel tests.

Ukeguchi, N., H. Sakata, H. Okamoto, and Y. Ide, 1967: Study on Stack Gas Diffusion. Mitsubishi Technical Bulletin No. 52.

The authors reported that downdraughts occur where the structures and/or buildings stand near the stack, but these can be prevented on the whole with the increase of stack height to 2.5 times greater than the structures and/or buildings surrounding the stack. They stressed that downdraughts produce very high ground level concentrations, depend on the layout of structures and/or buildings, and must be avoided. A wind-tunnel study examined the influence of a nearby building complex on plume diffusion and found only a small effect when the stack was 2.5 times the building height and a negligible effect when the stack was over 3 times the building height. No general rules are given as being applicable to the effects of topography; thus wind-tunnel models are used to assess air quality impact.

World Meteorological Organization, 1967: The Airflow over Mountains. WMO, Geneva, Switzerland. Report No. 98, 43 p.

The World Meteorological Organization technical note concludes that, over rugged terrain, whether the flow aloft is smooth or otherwise, it usually rests on a turbulent wake. Although little descriptive detail of such regions is presented in the report, many photographs showed the wave structures above the wakes, as revealed by cloud formations.

Berlyand, M. E., 1968: Meteorological Factors in the Dispersion of Air Pollutants in Town Conditions. Symposium of Urban Climates and Building Climatology, Brussels.

The author mentions that the character of air motion changes considerably near hilly relief and can substantially influence pollutant dispersion. The increase of concentration was reported to sometimes occur even if the pollutant sources are located on elevated places, but near leeward slopes where wind velocity decreases sharply and downward currents arise. He states that at present numerical solution of the equations of motions and wind tunnel experiments are carried out for each case. Experiments on models of separate plants and buildings have permitted determination of zones in which downward currents and pollutant stagnations are possible. The "2.5 times rule" is referenced as the recommended stack height in order to avoid considerable increases of concentration.

Halitsky, T., 1968: Gas Diffusion Near Buildings. Meteorology and Atomic Energy - 1968, D. H. Slade (Ed.), Chapter 5-5.

A detailed discussion of flow separation and wake formation near buildings is presented. The introduction of a building into a backgound flow is stated to cause changes in the velocity and pressure fields. The new fields are called aerodynamically distorted, with the amount of distortion measured by the difference between the distorted and the background properties. The author presents a literature review of flow near characteristic structures. It appears that the flow downwind of sharp-edged buildings is disrupted to a greated extent than for rounded buildings. No definition of the vertical or horizontal extent of the building wake which could be used to determine the height of a stack sufficient to avoid adverse influence is presented.

Scorer, R. S., 1968: Air Pollution. Pergamon Press, Oxford, England, pp 107-108.

The author discusses the consequences of a separated flow in the wake of obstacles. Several examples of adverse influences on chimney effluents in the wake of buildings and steep hills are presented. The examples are quite descriptive of the problem; however, no specific definitions to the size and extent of wake effects are given. It is suggested that chimney tops be cleanly shaped without elaborate decoration or increase in exterior size and that the efflux velocity should be enough only to prevent downwash into the wake and cold inflow. It is noted that devices have been employed to prevent chimney downwash. The author also states that, if chimneys need to be short, there are many devices which can be employed to prevent separation at salient edges. One such device is shown.

Strom, G. H., 1968: Atmospheric Dispersion of Stack Effluents. In: Air Pollution. Vol. I, Stern, A. C. (Ed.), Academic Press, New York, Chapter 8.

A brief discussion of the effects on plume dispersion induced by terrain and buildings is presented. The results of several wind tunnel experiments are presented. The need for experimental procedures is stated since there are no accurate analytical procedures. The adverse effects were seen to be greater when the wind was normal to the long dimension of the building. The desirability of designing stacks high enough to have the plume remain clear of the highly turbulent regions is stated. No specific definitions of the extent of the highly turbulent regions is presented. Evans (1957) is referenced as providing guidance when experimental data is not available for specific cases.

Forsdyke, A. G., 1970: Meteorological Factors in Air Pollution. Technical Note No. 114, World Meteorological Organization, Geneva, Switzerland.

The following sentence is the only mention of stack height in relation to the effect of building eddies which, if the chimney is not high enough, will bring high concentrations of the pollutant down to ground level in puffs. "To overcome this effect it is required in some countries that the chimney height shall be at least two and one half the height of the building from which it rises."

Pooler, F., Jr., and L. E. Niemeyer, 1970: Dispersion from Tall Stacks: An Evaluation. Presented at the Second International Clean Air Congress, Washington, D. C. December 6-11, 1970, Paper No. ME-14D. 31 p.

The authors present, as part of a study evaluating dispersion from tall stacks, several situations in which unexpectedly high ground level concentrations could be associated with mountain lee effects. On days with neutral flow, the plume from a stack located 13 ridge heights downwind from a 450 m ridge was carried down to ground level within a very short distance. This phenomenon could well be a result of the strong downwash that occurs near the leeward edge of a standing eddy.

World Meteorological Organization, 1970: Urban Climates and Building Climatology. Proceeding of the Symposium on Urban Climates and Building Climatology, Jointly organized by the World Health Organization and WMO, Brussels, October 1968, WMO Technical Note No. 108, 109.

Concern for potential adverse building effects upon plume dispersion was mentioned in several of the symposium presentations. Only one of the authors alluded to the "2.5 times rule" as referenced by Hawkins and Nonhebel (1955). One of the general conclusions as reported by T. J. Chandler was that "there is an urgent need to define much more vigorously the physics of the urban surface--particularly its thermal and aerodynamic properties." He also concluded that wind measurements within the cubic of the city are clearly dependent upon very local conditions which "makes it very difficult to use such field observations to construct any general theory although simple models of airflow around single structures may still prove of practical use. Wind tunnel and similar laboratory techniques have a very real contribution to make in these enquiries."

Meroney, R. N. and B. T. Yang, 1971: Wind-Tunnel Study on Gaseous Mixing Due to Various Stack Heights and Injection Rates Above an Isolated Structure. USAEC REport No. COO-2053-6.

This wind-tunnel study examines the influence of a simple cubical structure on the dispersion of a tracer gas released from short stacks at varying heights and exhaust velocities. Both smoke visualization and quantitative concentration measurements were made. The conclusions of this study include;

(1) For a stack less than 1.5 times the building height, high exhaust velocities cannot prevent some immediate downwash.

(2) As the stack height increases, the effect of building entrainment decreases. Exhaust velocities, for stack heights greater than twice the building height, apparently need only be high enough to avoid downwash behind the stack itself.

(3) Building orientation apparently aggravates entrainment even for a simple cubical structure, however, the effect is not a major consideration here. (For more complicated building complexes, the influences may be more significant.)

Orgill, M. M., J. E. Cermak, and L. O. Grant, 1971: Laboratory Simulation and Field Estimates of Atmospheric Transport - Dispersion Over Mountainous Terrain. Colorado State University, Fort Collins, Colorado. Technical Report No. CER70-71MM-JEC-LOG40.

An extensive literature review relating to both field and fluid modeling studies and a discussion as to how mountainous terrain can alter atmospheric airflow is presented. The authors report that, for neutral airflow over a mountain, a large semipermanent eddy occurs on the lee side. An area in the central Rocky Mountains of Colorado was chosen for a field and laboratory study of transport and dispersion over irregular terrain. Two different atmospheric conditions were simulated: the thermal stability used in the wind tunnel model was near-neutral in the lower levels and stable in the upper levels for one case and totally neutral throughout for the other case. Field data yielded information on the mean velocity and dispersion characteristics over the local terrain. Totally neutral atmospheric stability conditions were observed on only one day. No specific information as to where and when boundary layer separation occurs or the size or shape of the cavity region in the lee of ridges is reported in either the field or laboratory study results. The purpose of the report is to generalize on flow patterns in complex terrain on a much larger scale.

Yasuo, I., 1971: Atmospheric Diffusion Theory of Factory Exhaust Smoke and Its Applications. Water Engineering Series, published by the Japan Society of Civil Engineers, Hydraulics Committee.

The author presents equations for providing air quality estimates that are intended for flat land. When the stack height is less than 2.5 times the height of buildings (or the mountains near the stack), it is suggested that the exhaust gas will be swept down into the turbulence area caused by the buildings. When this phenomena occurs, simulation methods using wind tunnels and other special techniques are used.

Lucas, D. H., 1972: Choosing Chimney Heights in the Presence of Buildings. Proceedings of the Interantional Clean Air Conference, Melbourne Australia, May 15-18, 1972, 27-52.

A chimney 2.5 times the height of any adjacent building is reported to follow the widely accepted rule of thumb to avoid effects by building turbulence. The fact that the building width must also be relevant in deciding the effect of the building is discussed. The essential difference for a tall thin building is that flow around the building reduces the effect of flow over the building. It is generalized for all buildings that a building wake has a height above the building of 1.5 times the height of width of the building, whichever is less. The extent of the turbulent wake is reported to be pronounced for a distance downwind of approximately five building heights or half-widths, whichever is less. While there is no abrupt cut-off in fact, it is considered convenient to take the effect as declining progressively to zero from 5 to 10 building heights or half-widths, whichever is less.

Schultz, J. G., 1972: Self Pollution of Buildings. The ASME Proceedings of the 1972 National Incinerator Conference, New York, NY. June 4-7, 1972, 201-210.

It is suggested that good design for a chimney or exhaust system is to locate them above the eddy area. Otherwise, there will be recycling of exhaust products in to the air intake to contaminate the entire building. The vertical extent of the eddy over a cubical building is given according to Evans (1957) as 1.5 times the building width.

Shingi, K., 1972: Wind Tunnel Experiment on Ascent Height of Exhaust Gas. Central Research Institute of Electric Power Industry Report, 71053 (Translated from Japanese), 26 p.

The results of wind tunnel exepriments on the ascent height of exhaust gas from thermal and nuclear power plants are reported, and studies are made of the ascent height with relation to down-washing, down-draught, and the stack type. The laws of wind tunnel similarity are also discussed. It was found that stack down-washing does not occur if the ratio between the exhaust gas speed and wind speed is more than two. For the power plants studied, down-draught in the wake of the building did not occur even when the stacks were much lower than 2.5 times the building hieght, if the exhuast gas rate was large enough. The author comments that the 2.5 times law does not have a theoretical basis making it applicable to all cases.

American Society of Mechanical Engineers, 1973: Recommended Guide for the Prediction of Airborne Effluents. Smith, M. (Ed.), New York, AMSE, 85 p.

One section of the book discusses the influence of buildings and irregular terrain. It is reported that few quantitative diffusion experiments have been made in irregular terrain; however, visual observations of plume behavior in a variety of situations have been made. The plume from a stack placed in the cavity leeward of a valley ridge is said to become thoroughly diffused before passing downwind to the wake region where the flow was in the direction of the upper wind. The air flow disturbed locally by buildings is shown to influence that portion of the plume which penetrates the disturbed flow region. Changes in building shape and orientation to the wind are reported to affect the cavity dimensions and flow to a marked degree, but the gross dimensions of the displacement zone and wake for sharp-edged buildings appear to be a function primarily of the frontal area of the building presented to the wind. Also for rounded buildings, both the displacement zone and wake are smaller than for sharp-edged buildings since separation usually occurs downwind of the center of the buiilding where the direction of the surface flow just prior to separation is horizontally downwind rather than normal to the wind. No quantitative definitions of th vertical or downwind extent of the region of adverse influences near buildings or terrain are given.

Briggs, G. A., 1973: Diffusion Estimation for Small Emissions. Atmospheric Turbulence and Diffusion Laboratory, NOAA, OAK Ridge, TN, (Draft) ATDL No. 75/15.

A method for estimating air quality concentrations for emissions influenced by buildings is presented. The plume is considered to be within the region of building influence only when the estimated source height is less than the building height plus 1.5 times the building height or width, whichever is less. The "cavity" region where there is circulation of the flow within the wake of the building is defined to equal the building height plus 0.5 times the building height or width, whichever is less.

Peterka, J. A. and J. E. Cermak, 1975: Turbulence in Building Wakes. Presented at 4th International Conference on Wind Effects on Buildings and Structures, London, United Kingdom. Colorado State Univ. Report No. CEP74-75 JAP-JEC 34.

The mean velocity and turbulence characteristics in the wake of simple rectangular-shaped builidngs were measured in a boundary layer wind tunnel. The mean velocity deficit, turbulence excess, and longitundinal vorticity relative to the undisturbed turbulent boundary layer are presented and discussed. The conclusions of this study include;

(1) The turbulence wake effects of single building heights do not extend beyond 15 to 20 building heights and can be much less for a tall, narrow building.

(2) Mean velocity effects in the wake do not extend beyond 15 to 20 building heights except when the angle at flow is such that corner vortices are formed over the building roof.

(3) Within the primary wake region, the wake can extend 4 to 5 building heights in the vertical direction and 4 to 5 building widths in the lateral direction for a strongly three-dimensional building.

(4) The data show that the wake characteristics of tall, narrow buildings and low, long buildings are different. Furthermore, neither the characteristics for a building of complex shape nor for a group of buildings has been investigated.

(5) When the flow relative to a builidng is such that corner vortices (swirling motion) are formed over the building roof, a longitudinal vorticity was observed as far as 80 building heights downwind.

Smith, D. G., 1975: Influence of Meteorological Factors Upon Effluent Concentrations On and Near Buildings with Short Stacks. Presented at the 68th Annual Meeting of the Air Pollution Control Association, Boston, Mass., June 15-20, 1975, Paper No. 75-26.2.

Field data of concentrations from stack emissions near a scaled-down model of an industrial building is presented. The tests were conducted for selected conditions of atmospheric stabilility, aerodynamic roughness of upwind fetch, and wind orientation angle of the building. The exit velocity was greater than twice the wind speed for all tests to eliminate stack downwash as available. The study was designed to measure the amount of effluent reaching the building and ground surfaces in the downwind wake cavity of the building under a variety of stack heights. Concentrations along the lee wall of the building were measurable, even when the stack was 2 to 2.5 times the building height. However, much higher concentrations were found when that stack was less than 1.5 times the building height.

Britter, R. E., J. C. R. Hunt, J. S. Puttock, 1976: Predicting Pollution Concentrations Near Buildings and Hills. Presented at the Conference on Systems and Models in Air and Water Pollution, at the Institution of Measurement, London, Sept. 22-24, 1976.

Several simple mathematical representations of different parts of the flow field near buildings and hills are presented. These models are based on theoretical arguments applicable to two-dimensional flow. Reliable calculation methods for the mean turbulent flow around obstacles (three-dimensional is implied) are stated to not exist. The effects of the distorted flow, in the wake behind two-dimensional bluff surface obstacles in a turbulent boundary layer, upon emissions of various height and downwind locations is evaluated. A source elevated to only 1.5 times the obstacle height is found to be greatly influenced unless it is placed farther than 10 obstacle heights downwind. The influence upon a source elevated to 2.5 times the obstacle height is found to be much less, however, the effect extends to sources as far downwind as 20 obstacle heights. No significant effect is found for source heights that are greater than 3 times the obstacle height.

Huber, A. H., W. H. Snyder, R. S. Thompson, and R. E. Lawson, Jr., 1976: Stack Placement in the Lee of a Mountain Ridge. U. S. Environmental Protection Agency, EPA-600/4-76-047, Research Triangle Park, NC.

A wind tunnel study was conducted to examine the effects the highly turbulent region in the lee of a two-dimensional mountain ridge. Smoke visualization and hot film anemometry measurements showed that the cavity size and shape were minimally affected by the thickness and turbulence intensity of the approach, boundary layer flow. The size of the region of strong circulation in the lee of the model ridge was found to be strongly dependent upon the upwind terrain and the gross topographic features (angles) of the downslope. The largest cavity was found to extend to two ridge heights in the vertical and to ten ridge heights downwind. A stack 2.5 times the height of the ridge is stated to avoid the highly turbulent region of the cavity proper. It is implied that a taller stack may be necessary to avoid all wake effects since part of the plume can, in only a short distance, spread downward into the wakes. The need for studies of the behavior of plumes from sources placed downwind of the cavity region is stated since the turbulence intensity downwind of the cavity was found to be still significantly greater than in the undisturbed flow.

Huber, A. H. and W. H. Snyder, 1976: Building Wake Effects on Short Stack Effluents. American Meteorological Society, Third Symposium on Atmospheric Turbulence Diffusion and Air Quality, Raleigh, NC Oct. 19-22, 1976, 235-241.

A wind tunnel study was conducted to examine building wake effects on effluents from stacks near a building whose width is twice its height. Some discussion of the building influences on the plume dispersion is presented. For those sources having an effective stack height less than 2.0 building heights, very significant effects upon measured ground level concentrations were found. Visual observations of smoke were also made in order to assess the building influence upon stack emissions. There was significant reduction in building effect for the most elevated stack which was 2.5 times the building.

Snyder, W. H. and R. E. Lawson, Jr., 1976: Determination of a Necessary Height for a Stack Close to a Building--a Wind Tunnel Study. Atmospheric Environment, 10, 683-691.

Wind tunnel tests shows a stack 2.5 times the building height is adequate for a building whose width perpendicular to the wind direction is greater than its height, but unnecessary for a tall, thin building. Smoke was used for flow visualization and quantitative concentration measurements of a tracer gas emitted with the stack effluent were made downwind of the building. For a tall, thin building, application of an alternative to the 2.5 times rule (Briggs, 1973) was shown to be adequate. Thus, it is concluded that a sufficient stack height in order to not have the plume entrained into the wake of the building is equal to the building height plus 1.5 times the building height or width, whichever is less.

Frost, W. and A. M. Shahabi, 1977: A Field Study of Wind Over a Simulated Block Building. NASA CR-2804 prepared by the Univ. of Tenn. Space Inst., Tullahoma, Tenn.

A field study of the wind over a building 2.4 m (deep) x 3.2 m (high) x 26.8 m (long) is reported. The study was designed to provide a fundamental understanding of mean wind and turbulence structure of the wind field. Eight instrumented towers were placed in the region both upwind and downwind of the building. Horizontal and vertical wind sensors were placed at the 3, 6, 12, and 20 meter levels. Approximately 100 experimental runs have been conducted. Hand held smoke candles and anemomenters were used to define the extent of the region of recirculating flow downwind from the building with its long side oriented perpendicular to the flow. The downwind extent was about 12 ± 2 building heights. This is compared to values of 13-16 building heights reported for similar two-dimensional laboratory tests. The smoke patterns indicate that the wake extends to a height of approximately 1.5-2 building heights. The values of the velocity components at the 3 m level were strongly influenced by the building, but at the 12 m (∿ 3 building heights) level the influence was not apparent.

International Atomic Energy Agency, 1977: Guideline for Atmospheric Dispersion Estimates. Vienna, Austria.

It is reported that the motion of effluents near bluff bodies, such as buildings, is affected by distortion of the windfield. Stacks at least twice the height of the tallest adjacent building are usually necessary except when the discharges are insignificant. Because of the great variety of possible terrain conditions, a generalized treatment of the effects of features such as hills or valleys is stated as not feasible, since the exact flows will be extremely site-dependent. The use of fluid flow modeling is suggested as providing some help in estimating the plume trajectory near hilly terrain.

Robins, A. G. and I. P Castro, 1977: A Wind Tunnel Investigation of Plume Dispersion in the Vicinity of a Surface Mounted Cube-I. The Flow Field, II. The Concentration Field. Atmospheric Environment, 17, 291-311.

Experiments investigating both the flow field and plume behavior downstream of an isolated surface mounted cube in the Marchwood Engineering Laboratory wind tunnel are reported. The wake air flow was found to be strongly affected by upstream turbulence. For both a 0° and 45° orientation of the building into the wind, the effective wake zone in a turbulent boundary layer extended upwind to about five times the height of the cube. The region of reversed flow extended downwind to 1.5 heights for wind angle, θ, of 0°, and 2 heights for θ of 45°. The mean velocity deficit was reported to extend to twice the building height for both the 0° and 45° orientation. A tracer gas was emitted from a stack over the roof center. The stack extended from building height to 2.5 times the building height. The influence of the building was found to be detectable for θ = 0 degrees and a low stack emission rate; however, for a ratio of emission velocity to wind speed of 3:1, the influence was negligible for a stack height 2.5 times the building height. For θ = 45° the influence of the cube was detectable for all the stack heights and emission velocity ratios. It is concluded that much work remains to be done on the influence of nearby buildings on the behavior of chimney plumes. Also, it is especially important to model correctly the approach flow when undertaking wind tunnel investigations of diffusion in the vicinity of isolated buildings.

Hosker, R. P. Jr., 1981: Methods for Estimating Wake Flow And Effluent Dispersion Near Simple Block-Like Buildings. NOAA Technical Memorandum, ERL ARL-108.

The report consolidates available data and methods for estimating flow and effluent dispersion near isolated block-like structures. The report is intended for those who routinely face air quality problems associated with near-building exhaust stack placement and height and the resulting concentration patterns.

Meroney, R. N., 1982: Turbulent Diffusion Near Buildings. Engineering Meteorology. Elsevier Science Publishing Company, Amsterdam.

A review of information and methods for estimating flow and diffusion near buildings is presented. Transportation associated diffusion and buoyancy dominated dispersion problems are also reviewed.

Wilson, D. J. and Winkel, G., 1982. The Effect of Varying Exhaust Stack Height on Containment Concentration at Roof Level. ASHRAE Transactions. 88:1.

The results of a wind tunnel model study of stack height on concentrations at roof level is presented. The emphasis of this study is on the design of industrial ventilation systems. Reference is made to Chapter 14 of the ASHRAE Handbook--1981 Fundamentals for Additional Design Methods.

Wilson, D. J. and R. E. Britter, 1982. Estimates of Building Surface Concentrations From Nearby Point Sources. Atmospheric Environment, 16, 2631-2646.

The results of a wind tunnel model study of concentrations at building air intakes as a result of upwind sources, surface sources and downwind sources within the near building wake recirculating region is presented. A qualitative description of the relevant dispersion mechanisms and then some theoretical and experimental results are given.

Snyder, W. H., 1983. Fluid Modeling of Terrain Aerodynamics and Plume Dispersion, A Perspective View. Preprints Volume, Sixth Symposium on Turbulence and Diffusion, American Meteorological Society, Boston, March 22-25, 317-320.

The results and conclusions of several recent fluid model studies conducted at EPA's Fluid Modeling Facility are summarized. Including:

a. Arya, S.P.S. and Shipman, M.S., 1981: An Experimental Investigation of Flow and Diffusion in the Disturbed Boundary Layer Over a Ridge; Part I: Mean Flow and Turbulence Structure, Atmos. Envir., v. 15, no. 7, p. 1173-84.

b. Arya, S.P.S., Shipman, M.S. and Courtney, L. Y. 1981: An Experimental Investigation of Flow and Diffusion in the Disturbed Boundary Layer Over a Ridge; Part II: Diffusion from a Continuous Point Source, Atmos. Envir., v. 15, no. 7, p. 1185-94.

c. Castro, I. P. and Snyder, W. H., 1982: A Wind Tunnel Study of Dispersion from Sources Downwind of Three-Dimensional Hills, Atmos. Envir., v. 16, no. 8, p. 1869-87.

d. Hunt, J.C.R. and Snyder, W.H., 1980: Experiments on Stably and Neutrally Stratified Flow over a Model Three-Dimensional Hill, J. Fluid Mech., v. 96, pt. 4, p. 671-704.

e. Khurshudyan, L.H., Snyder, W.H. and Nekrasov, I.V., 1981: Flow and Dispersion of Pollutants over Two-Dimensional Hills: Summary Report on Joint Soviet-American Study, EPA-600/4-81-067, U. S. Environmental Protection Agency, Research Triangle Park, NC.

Under neutral conditions, the maximum ground level concentrations occurred with the source located just downwind of a two-dimensional ridge. Terrain amplification factor's are found to range from 0.5 for sources on top of two-dimensional ridges to 15 for sources downwind of two-dimensional ridges. Terrain amplification factors for three-dimensional hills have values in between the above for two-dimensional ridges.

Fackrell, J. E., 1984. Parameters Characterising Dispersion in the Near Wake of Buildings. Journal of Wind Engineering and Industrial Aerodynamics, 16, 97-118.

The paper describes wind-tunnel measurements of near-wake parameters for many different building shapes in a variety of boundary-layer flows. A few cases were also examined with two buildings and variable downstream spacing.

Lawson, R. E. Jr., 1984. Effect of Terrain-Induced Downwash on Determination of Good-Engineering-Practice Stack Height. U.S. Environmental Protection Agency, Research Triangle Park, NC, July.

Terrain amplification factors were measured for a variety of source positions (locations and heights) both upstream and downstream of two model hills, an axisymmetric hill and a two-dimensional ridge. The spatial variation of these terrain amplification factors was used to delineate the vertical and longitudinal extent of the areas where excess concentrations (terrain amplification factor >1.0) occurred. For the axisymmetric hill, a region of 40% excess concentration was found to extend a maximum of 1.8 hill heights in the vertical, 14 hill heights upstream, and 10 hill heights downstream. For the two-dimensional ridge, this region of 40% excess concentration extended 2.2 hill heights in the vertical, 8 hill heights upstream, and 15 hill heights downstream. Maximum terrain amplification factors for both the axisymmetric hill and the two-dimensional ridge were found on the downstream side of the hills and had values of approximately 5.6 and 6.8, respectively.

Hosker, R. P. Jr., 1984: Flow and Diffusion Near Obstacles. Atmospheric Science and Power Production. D. Randerson, Editor, U.S. Department of Energy Technical Information Center DOE/TIC-27601.

A comprehensive consolidation of information of flow and effluent diffusion near obstacles is presented. Available data on the extent of the upwind influence of a body, the characteristics and size of the near body flow, and the behavior at the far wake is summarized.

TECHNICAL REPORT DATA
(Please read Instructions on the reverse before completing)

1. REPORT NO. EPA-450/4-80-023R	2.	3. RECIPIENT'S ACCESSION NO.
4. TITLE AND SUBTITLE Guideline for Determination of Good Engineering Practice Stack Height (Technical Support Document for the Stack Height Regulations)(Revised)		5. REPORT DATE June 1985
		6. PERFORMING ORGANIZATION CODE
7. AUTHOR(S)		8. PERFORMING ORGANIZATION REPORT NO.
9. PERFORMING ORGANIZATION NAME AND ADDRESS Environmental Protection Agency Office of Air Quality Planning and Standards Research Triangle Park, NC 27711		10. PROGRAM ELEMENT NO.
		11. CONTRACT/GRANT NO.
12. SPONSORING AGENCY NAME AND ADDRESS		13. TYPE OF REPORT AND PERIOD COVERED
		14. SPONSORING AGENCY CODE
15. SUPPLEMENTARY NOTES		

16. ABSTRACT

This revised guideline provides background information used to develop a means of computing good engineering practice (GEP) stack height according to the requirements of Section 123 of the Clean Air Act, as amended. The report also summarizes the application of the structure-based formula to determine GEP stack height under different general building formations.

17. KEY WORDS AND DOCUMENT ANALYSIS

a. DESCRIPTORS	b. IDENTIFIERS/OPEN ENDED TERMS	c. COSATI Field/Group
Air Pollution Good Engineering Practice Stack Height	Air Pollution Control	

18. DISTRIBUTION STATEMENT Unlimited	19. SECURITY CLASS *(This Report)* Unclassified	21. NO. OF PAGES 102
	20. SECURITY CLASS *(This page)* Unclassified	22. PRICE

EPA Form 2220-1 (Rev. 4-77) PREVIOUS EDITION IS OBSOLETE