DEPARTMENT OF CONSERVATION
Maine Geological Survey
Robert G. Marvinney, State Geologist

OPEN-FILE NO. 99-109

Title: *Surficial Geology of the Biddeford 7.5-minute Quadrangle, York County, Maine*

Author: *Carol T. Hildreth*

Date: *1999*

Financial Support: Funding for the preparation of this report was provided in part by the U.S. Geological Survey Cooperative Geological Mapping (COGEOMAP) Program, Cooperative Agreement No. 14-08-0001-A0432.

Associated Maps: Surficial geology of the Biddeford quadrangle, Open-File 99-78
Surficial materials of the Biddeford quadrangle, Open-File 98-183

Contents: 6 p. report

Maine Geological Survey
Open-File 99-109

Surficial Geology of the Biddeford 7.5-minute Quadrangle, York County, Maine

Carol T. Hildreth
135 Washington Street
Holliston, Massachusetts 01746

INTRODUCTION

The Biddeford and Biddeford Pool 7.5-minute quadrangles comprise an area of about 55 square miles (142 km^2) along the coast of southwestern Maine, within the Seaboard Lowland physiographic province, about 15 miles south of Portland. Altitudes range from sea level to about 200 feet (61 m) above sea level. The drainage pattern is dominated by the Biddeford pluton (Figure 1), a large oval-shaped biotite granite mass that intruded the surrounding Precambrian-Silurian metasedimentary rocks of the Kittery and Berwick Formations about 354 million years ago during the Mississipian Period (Hussey, 1985). The Saco River skirts the northeast edge of the pluton, and some of its minor tributaries drain the northwest edge and northern part. The Kennebunk River flanks the southern edge, and some of its tributaries, including Goff Mill Brook, drain the southern part. (NOTE: No major stream lies along the plutonic contact; perhaps there is a contact-metamorphic hornfels border zone in the metasedimentary rocks that is equally resistant to weathering and erosion as the marginal phase of the pluton itself.) The central and eastern part of the pluton is drained by several small rivers and brooks, all of which enter the Atlantic Ocean via Goosefare Bay (Figure 1), where a barrier island of sandy beach and dune deposits has formed across the mouths of their estuaries. The stream pattern over the pluton itself is remarkably rectilinear, reflecting two major roughly right-angle joint sets—northeast and northwest trending. The joint pattern is very obvious on air photos, especially in areas of abundant outcrop, but the pattern is not obvious on the topographic map because the 20-foot contour interval is too large to show the many distinct, closely spaced, parallel bedrock ridges and poorly drained valleys throughout the areas of abundant outcrop (by far the major characteristic of the land surface in this area).

Parallel to the northeast-trending joint set, a 60-foot escarpment that roughly bisects the pluton reflects a mapped fault (Hussey, l985) that has apparent relative upward displacement of the northwest block and apparent horizontal southwest displacement of the southeast block, though the actual movement is unknown. Note also in Figure 1 that the fault trace is uncertain and shown as a dashed line near the southern end of the pluton. Drainage off this escarpment follows the general rectilinear pattern, except near its southern end where several tributary streams have a pronounced change in course to south-southwest just be-

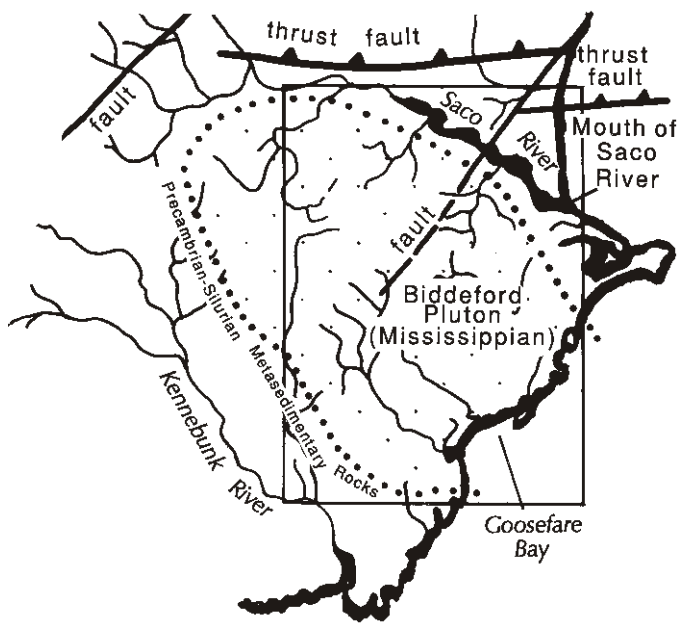

Figure 1. Biddeford quadrangle (outlined), showing relationship of drainage pattern to bedrock structure (from Hussey, 1985).

low the scarp (instead of a right-angle bend to a southwest direction, which is what would be expected); this course change may reflect a change in the overall joint pattern near the fault, or a change in the fault direction, or movement along the fault, or any combination thereof.

The landscape north of the Saco River in the Biddeford quadrangle is primarily a broad, sandy plain drained eastward to the Atlantic by Goosefare Brook; the shore there is characterized by a classic Holocene sandy beach complex that stretches for miles northward as "Old Orchard Beach."

The Biddeford Pool quadrangle contains many rock islands, the largest two of which are connected to the mainland by two sandy tombolos—Fletcher Neck and Hills Beach—which enclose a shallow tidal pool that is presently open to the sea only through a deep narrow channel between the two rock islands (Hulmes, 1981).

There is some indication that part of the glacial and preglacial Saco River may have followed a more southerly course before entering the sea, as inferred from the distribution of meltwater deposits (Caldwell and others, 1985). One such course could have been into the lower Kennebunk River, around the northwest nose of the Biddeford pluton (see Figure 1). This thought invites further investigation beyond the scope of this report. Also, during re-emergence of the coastline in postglacial time, part of the Saco may have flowed briefly along an abandoned channel(?) that begins at its upstream end along the current shore of the Saco between Jordan Point and St. Francis College, thence southeast landward of Hills Beach into Back Bay and The Pool. The surface of the Presumpscot marine clay in The Pool is 15 to 20 feet below sea level and deepens to the south of Fletcher Neck (Hulmes, 1979, 1981), where there appears to be an offshore submarine channel. The present author proposes that, in downcutting its channel through glaciomarine sediments, the ancestral Saco encountered the bedrock at the northern end of this abandoned channel and was thereby diverted easterly into its current course.

PREVIOUS WORK

Early work on the surficial geology in southwestern Maine, including the Biddeford and Biddeford Pool area, was done generally at a reconnaissance level and at a smaller scale (Bloom, 1960, 1963; Smith, 1977a-c). Subsurface data was collected as part of a basic data set (Prescott and Drake, 1962) and significant sand and gravel aquifers were mapped (Tolman and Lanctot, 1985). Publications on the glacial geology of the southwestern Maine coastal zone include Smith (1984, 1985), Stuiver and Borns (1975), Thompson (1979, 1982), and Thompson and Borns (1985). The Holocene stratigraphy of the Biddeford Pool area was studied in detail by Hulmes (1979, 1980, 1981). The Soil Survey of York County (National Cooperative Soil Survey, 1982) greatly facilitated fieldwork.

GLACIATION

Southwestern Maine probably experienced several advances of the Laurentide continental ice sheet during the Pleistocene Ice Age, but virtually all evidence in this area for previous glaciations was obliterated during the last glaciation (late Wisconsinan) when the continental glacier advanced from the northwest across the area to a terminal position on the continental shelf. Glacial erosion within this area is mainly noticeable as glacial striations on freshly exposed bedrock surfaces; some ramp and pluck topography on bedrock knobs, including a few roche moutonnée and small-scale crag-and-tail features in conjunction with the striations, definitely record southeast movement of the ice. It should be noted that glacial striations weather rapidly and survive for a very short time (generally only a few years) after exposure to surface elements in this climate; those along the shore of the Saco River and Atlantic Ocean are on bedrock exposures recently stripped of overlying surface sediments by storm wave action. Most others were found on recently excavated bedrock surfaces in borrow pits. Generally, the striations indicate a south to southeast direction of ice flow; some variations can be attributed to local deflection of the ice flow around irregularities of the bedrock topography. At least four localities had two sets of intersecting striations—(1) in the West Brook valley, east of downtown Biddeford (135° striations are older than 169-183°); (2) in a borrow pit between the Biddeford City Line and Beaver Pond (153-158° striations are older than 165-175°); (3) along the shore south of East Point in the Biddeford Pool quadrangle (133-137° striations are older than 158-152°); and (4) in a house foundation excavation on South Road next to the Maine Turnpike where age relations of the striations were not clear. Where age relations between two sets on the same outcrop are clear, the younger striations represent a more southerly (in places, even southwesterly) ice flow direction. However, this does not mean that all southerly or southwesterly striations are of the same age, nor does this meager set of measurements constitute sufficient data to postulate anything greater than a minor secondary pulse of ice flow in a slightly different direction from the earlier flow at the same site. Even though some previous workers interpreted some features in the Kennebunk area as evidence of a glacial readvance, the controversy is ongoing (Smith, 1981).

After reaching its terminal position on the continental shelf, the late Wisconsinan ice sheet began to recede between 17,000 and 15,000 years ago, retreating across the Gulf of Maine to an offshore position roughly parallel to the present coastline about 14,000 years ago (Smith, 1985). Shells collected from glaciomarine sediments apparently deformed by ice shove in Kennebunk, just to the southwest, were radiocarbon dated at 13,200 yr B.P. (Smith, 1985). Thus, the ice sheet terminus must have been in the Biddeford area about that time, although some workers feel that ice had retreated far inland from the coast by 13,000 yr B.P. based on other evidence (Thompson and Borns, 1985). Additional data may clarify the picture, eventually. (NOTE:

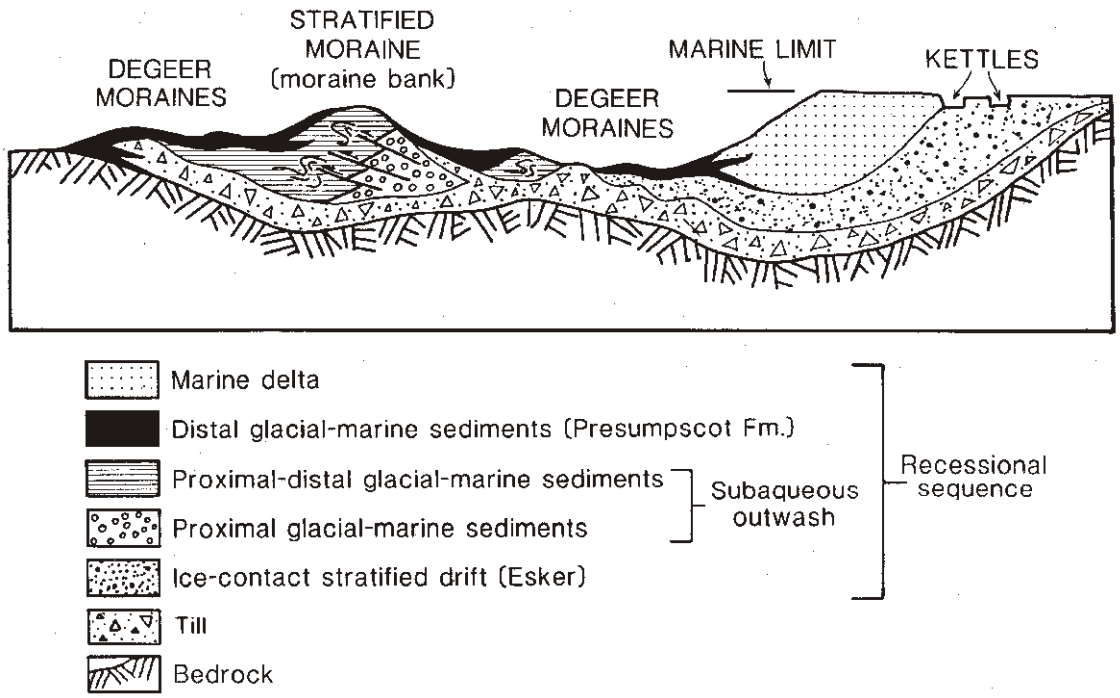

Figure 2. Generalized glacial stratigraphy for the southern Maine coastal zone (from Thompson and Smith, 1988).

Some fossil shells were collected in a pit near Beacon Corner in the Biddeford quadrangle during fieldwork for the present report, but have not yet been identified or dated.)

"Two indirect effects of glaciation had a very strong bearing on the character of ice retreat and the deposition of the glacial sediments in this portion of the coastal zone. First, the great weight of the Laurentide continental ice sheet depressed the crust beneath the glacier significantly below its present level throughout the region. Secondly, as glaciers expanded worldwide, water was trapped on land as ice, causing sea level to be lowered by several hundred feet. Later, as the ice began to melt and retreat, water was returned to the ocean and sea level rose immediately. At the same time, the crust began slowly to rebound to its original level. The interaction of these effects resulted in submergence of the entire Maine coastal zone for a period of several hundred years following the retreat of the ice" (Smith, l999). Within the Biddeford area, marine submergence reached an estimated 190 feet (58 m) above present sea level (Clinch and O'Toole, 1999a,b). Boulder accumulations around the sides of the 200+ foot a.s.l. standpipe hill south of Five Points in downtown Biddeford suggest the presence of a shoreline at about that level here. Only a few scattered spots in the quadrangle reach barely above the 200-foot contour, so nearly the entire area was submerged during the maximum marine transgression.

GLACIAL AND POSTGLACIAL DEPOSITS

The generally accepted concept of the succession of Pleistocene (Late Wisconsinan) glacial deposits in southwestern Maine is depicted in Figure 2 (Smith, 1985). In the Biddeford and Biddeford Pool quadrangles, only distal glacial-marine sediments (Presumpscot Formation), proximal-distal glacial-marine sediments, and till are recognized, but most of these sediments have been modified and some have been completely transformed by wave and current action during marine offlap. Thus, areas that are predominantly sand and gravel which may have been originally deposited directly from glacial meltwater have been reworked and exhibit many characteristics of marine shoreline or nearshore deposits and are therefore mapped as such (Pms and Pmn). The succession of surficial deposits (Holocene and Pleistocene) in the Biddeford area is given on the correlation chart showing the relative ages of the map units (Figure 3).

Till (map unit Pt) occurs throughout the Biddeford area; its thickness is variable, as is its composition. Although various genetic types have been found throughout Maine, only the general lodgement till was observed here. Lodgement till was deposited beneath the ice sheet and forms a blanket deposit over the underlying bedrock; it is inferred to underlie younger deposits throughout the area (Figure 2). In most exposures this till is typically a compact boulder-pebble silt-clay.

Distal glacial-marine sediments of the Presumpscot Formation (Pp) and sandy marine sediments deposited during the regression of the sea (Pmrs) "occur as a discontinuous cover up to 50 m thick throughout the area of late-glacial marine submergence. The general distribution of the marine sediments was originally mapped by Goldthwait (1949), and the sediments were described in detail and given formational status by Bloom (1960). The marine clay and silt (Pp) is the type Presumpscot

Formation described by Bloom. It has a gradational contact with the overlying sandy facies of the marine sediments (unit Pmrs), which is a regressive deposit" (Smith, 1999). The sand-silt surface material that characterizes the Pmrs unit is generally only 1-3 feet thick, but may be as much as 10 feet thick in places (National Cooperative Soil Survey, 1982). Where present, the Pmrs unit is found overlying the clay-silt Pp unit, but the former is not everywhere present and may be older at one site than some of the clay-silt deposited at another site; thus, these are time-transgressive units. The clay-silt facies of the Presumpscot Formation generally overlies till and can be found overlying, underlying, and intertonguing with proximal-distal glacial marine deposits, including the Pleistocene marine shoreline deposits (Pms), as seen in borrow pits at Beacon Corner and Oak Ridge.

"Stratified deposits of sand and gravel that both underlie and intertongue with the Presumpscot Formation are considered to be subaqueous outwash sediments (Smith, 1982, 1985; Thompson, 1982). These materials are not exposed at the ground surface in the study area, and thus are not shown on the geologic map, but they form an extensive blanket of deposits beneath the younger marine sediments. Many exposures of these materials in nearby areas of southwestern Maine display a variety of distinctly fluvial primary structures" (Smith, 1999).

The surfaces of both the till and subaqueous outwash sediments have been substantially reworked by waves and currents in areas below the marine limit to form nearshore marine deposits (Pmn). Nearshore marine deposits include a wide variety of materials, from reworked till and clay to sand and gravel, that form a generally thin blanket over bedrock. Such deposits above the 120-foot contour are included in Pmn_1, whereas those below this elevation are mapped as Pmn_2; this boundary corresponds roughly with the edge of the fault scarp and a mapped 120-foot marine shoreline, based on beach deposits and depositional and erosional terraces of Pms_2. This was a simple Pmn subdivision to make because of the coincidence of the shoreline features with the scarp, but the contour interval of the base map is too great for further "meaningful" subdivision of this type of deposit in the map area.

The units mapped as $Pms_{1\text{-}4}$ may have originally been deposited as proximal glacial deposits; for example, the fan-shaped sand and gravel deposits that spread southeastward down West Street and Proctor Road may have been marine outwash fans (proximal glacial-marine sediments of Figure 2), but these deposits have been so well reworked by wave and current action that exposures in them consistently reveal sedimentary features characteristic of marine shorelines, such as openwork gravel in apparent beach ridges, lag boulder terraces and horizons, and depositional directions more compatible with marine shoreline processes than with glacial meltwater flow directions in this area. Pms deposits are predominantly sand and gravel representing shallow marine and/or marine shoreline deposits associated with particular sea-level stands mapped on the basis of erosional and/or depositional features at scattered sites in the area. Pms_1 represents deposits associated with sea-level stands of 160+ and 140+ feet, based on terraces and depositional features within these deposits -- especially those observed in borrow pits west of Blue Star Memorial Highway in Biddeford. A cobble-pebble-boulder gravel ridge at 160+ feet along Proctor Road is also interpreted as a beach ridge of this stand. Pms_2 represents deposits associated with a sea-level stand of 120- feet a.s.l., based on lag boulder deposits along West St., and depositional and erosional terraces at that level around West and Dungeon Brooks and tributaries of the Little and Batson Rivers. Pms_3 represents deposits associated with sea-level stands of 60+ and 80+ feet, based on well-sorted sand and gravel deposits and related scarps at these elevations. Fossil marine shells were dredged up from marine clays below sand and gravel of Pms_2 at Beacon Corner, a lag boulder horizon was found in pits northeast of Adams Corner, a cobble-boulder beach ridge dominates the unit along Newtown Road, and a pocket of marine clay was found within the Oak Ridge pits. (As noted previously, the cores of some of these deposits may be proximal glacial deposits, but I saw no unequivocal evidence of that). Pms_4 (mapped only in the Biddeford Pool quadrangle) represents deposits associated with a sea-level stand of 40- feet a.s.l., based on an uplifted beach ridge in the golf course at Biddeford Pool village. Some deposits mapped as Pmrs in the Biddeford quadrangle may belong in the Pms_4 unit, but I did not notice any shoreline features near this elevation there.

Deposits of Holocene age are generally associated with modern streams, wetlands, and marine shorelines. Along the coastline they include salt marsh (Hwsm), marine shoreline (beach) (Hms), and dune (Hd) deposits. A few small thin dune deposits cover saltwater marsh deposits along the Saco and Batson Rivers. One elongate sand ridge whose crest elevation is about 180 feet a.s.l. is interpreted to be a dune deposit; it is lumped with the Holocene dunes on the modern coastline, but may have formed when sea level stood near it while Pms_1 deposits were accumulating. Freshwater marsh (Hwfm) and swamp (Hws) deposits are found scattered throughout the area. These and the salt marshes are characterized by accumulations of decayed organic matter. Some are underlain by peat, in which case the deposit is further classified as to thickness and ash content of the peat (see map explanation). Alluvial deposits (Ha) of variable thickness and composition underlie the floodplains of most modern streams; it should be noted that swamp deposits and alluvial deposits are coincident along many stretches of the stream floodplains in this area.

Moors Brook has cut a channel as much as 20 feet deep through clay-silt deposits of the Presumpscot Formation; the resulting banks are nearly vertical in places and landslides (Hlsd) have developed in a few places where the steep banks have been recently undercut by the brook.

Finally, where the surface consists of substantial artificial materials used by man to fill depressions, both man-made and natural, or where the surface has been so altered by construction so as to obliterate the natural landscape, that area has been mapped as "af".

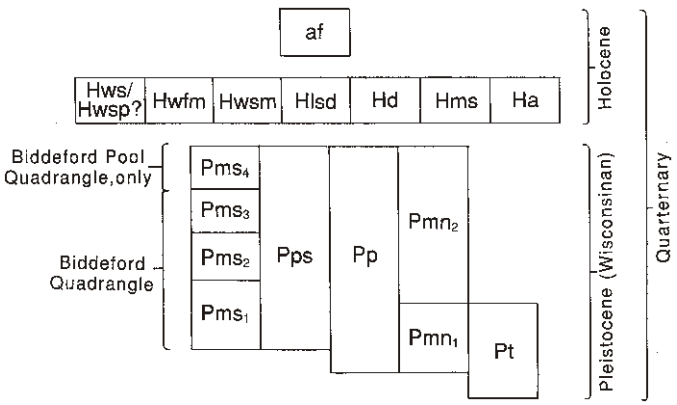

Figure 3. Provisional relative ages of map units for Biddeford and Biddeford Pool quadrangles.

DEGLACIAL AND HOLOCENE HISTORY

The Presumpscot Formation, which consists predominantly of rock flour, was carried by glacial meltwaters and deposited in a marine estuarine environment (Bloom, 1960) that included practically the entire study area, as the maximum submergence in the Biddeford area was around 190+ feet elevation. As the continental ice sheet retreated northwestward, the land began to rebound isostatically and relative sea level began to fall. Meltwater streams continued to carry sediment to the sea as sea level fell. "With progressive lowering of sea level, materials deposited during earlier stages of glaciation and deglaciation passed through the wave zone, were eroded, and shed sandy sediment (Pmrs) over the silt and clay (Pp) deposited when sea level was higher. Sandy to silty sediments eroded from till deposits (Pmn) form a veneer over till and bedrock in some parts of the study area. Short-term pauses in the lowering of relative sea level allowed for greater erosion at certain elevations, producing wave-cut scarps and accumulations of beach sediments (Pms). Several of these pauses occurred between the time of maximum submergence and offlap to the position of present sea level. Particularly prominent stands of sea level are recorded at elevations of 220-, 200+, 190+, 140+, 100+, 80+, 60+, 40-, and 20+ ft" (Smith, 1999) in nearby coastal areas. Some of these stillstands were identified in the Biddeford area and Pms deposits were subdivided accordingly. Some stream terraces are graded to these same levels and so are included in the corresponding deposits.

There is some evidence that the land emerged isostatically "until areas seaward of the present coastline were a minimum of 11 m (35 ft) above present sea level at that time. Weathered surfaces and tree stumps (now submerged) date this emergence to be at least 4,000 years B.P." (Hulmes, 1981). "Relative sea level on the coast of Maine has been rising since 4,200 years ago as recorded by radiocarbon-dated stumps. Tide gauge records indicate this submergence is continuing" (Hulmes, 1981, p.198), due primarily to eustatic sea level rise. Coastal marine processes have developed beaches of various types, including "clean" gravel to classical sandy beaches backed by dunes, which shelter the stream estuaries where saltmarsh deposits (some of which are greater that 5 feet thick) form within the zone of tidal fluctuation. The present shoreline configuration was probably established by about 1,000 yr B.P., based on a radiocarbon date for relict salt marsh recently exposed in the beach face at Fletcher's Neck (Vibracore 3, Section A-A', Biddeford Pool quadrangle), indicating a relatively slow (18 cm/yr) landward migration of that beach spit (Hulmes, 1981). Evidence in the study area for a postglacial lower sea level includes the apparent erosion channel in the Presumpscot Formation below Holocene tidal delta deposits in The Pool (See discussion on same in Introduction and Hulmes, 1980, 1981).

Modern streams have built floodplains that are graded to the present position of sea level, and freshwater wetland areas continue to accumulate deposits of organic matter (including peat) and fine-grained sediments. Evidence of modern erosion was presented in the discussion on exposures of glacial striations in the introduction.

REFERENCES CITED

Bloom, A. L., 1960, Late Pleistocene changes of sea level in southwestern Maine: Maine Geological Survey, 140 p.

Bloom, A. L., 1963, Late Pleistocene fluctuations of sea level and postglacial crustal rebound in coastal Maine: American Journal of Science, v. 261, p. 862-879.

Caldwell, D. W., Hanson, L. S., and Thompson, W. B., 1985, Styles of deglaciation in central Maine, *in* Borns, H. W., Jr., LaSalle, P., and Thompson, W. B. (eds.), Late Pleistocene history of northeastern New England and adjacent Quebec: Geological Society of America, Special Paper 197, p. 45-58.

Clinch, J. M., and O'Toole, P. B., 1999a, Surficial geology of the York Harbor quadrangle, Maine: Maine Geological Survey, Open-File Map 99-107.

Clinch, J. M., and O'Toole, P. B., 1999b, Surficial geology of the York Harbor 7.5-minute quadrangle, Maine: Maine Geological Survey, Open-File Report 99-138, 6 p.

Goldthwait, L., 1949, Clay Survey - 1948: Maine Development Commission, Report of the State Geologist, 1947-1948, p. 63-69.

Hulmes, L. J., 1979, Origin of the Hills Beach/Fletcher Neck tombolo system, Biddeford, Maine: Am. Assoc. Petrol. Geol., Bull., v. 63, p. 571.

Hulmes, L. J., 1980, Holocene stratigraphy and geomorphology of the Hills Beach/Fletcher Neck tombolo system, Biddeford, Maine: M. S. thesis, University of Delaware, 92 p.

Hulmes, L.J., 1981, Holocene stratigraphy and geomorphology of the Hills Beach/Fletcher Neck tombolo system, Biddeford, Maine, *in* Leonard, J. E., and Maurneyer, E. (eds.), Coastal and nearshore processes of the western Atlantic: Northeastern Geology, v. 3, p. 197-201.

Hussey, A. M., II, 1985, Bedrock geology of the Bath and Portland 2° map sheets, Maine: Maine Geological Survey, Open-File Report 85-87, 82 p., 2 plates, scale 1:250,000.

National Cooperative Soil Survey, 1982, Soil survey of York County, Maine: U.S. Department of Agriculture, 143 p., 66 sheets, scale 1:20,000.

Prescott, G. C., and Drake, J. A., 1962, Records of selected wells, test holes, and springs in southwestern Maine: U. S. Geological Survey, Maine Basic Data Report No. 1, Groundwater Series—Southwestern area, 35 p.

Smith, G. W., 1977a, Reconnaissance surficial geology of the Biddeford quadrangle, Maine: Maine Geological Survey, Open-File Map 77-10, scale 1:62,500.

Smith, G. W., 1977b, Reconnaissance surficial geology of the Kennebunk quadrangle, Maine: Maine Geological Survey, Open-File Map 77-13, scale 1:62,500.

Smith, G. W., 1977c, Reconnaissance surficial geology of the Portland quadrangle, Maine: Maine Geological Survey, Open-File Map 77-16, scale 1:62,500.

Smith, G. W., 1981, The Kennebunk glacial advance -- A reappraisal: Geology, v. 9, p. 250-253.

Smith, G. W., 1982, End moraines and the pattern of last ice retreat from central and south coastal Maine, *in* Larson, G. J., and Stone, B. D. (eds.), Late Wisconsinan glaciation of New England: Kendall/Hunt Pub. Co., Dubuque, p. 195-209.

Smith, G. W., 1984, Glaciomarine sediments and facies associations, southern York County, Maine, *in* Hanson, L. S. (ed.), Geology of the coastal lowlands, Boston MA to Kennebunk, ME: New England Intercollegiate Geological Conference , p. 352-369.

Smith, G. W., 1985, Chronology of Late Wisconsinan deglaciation of coastal Maine, *in* Borns, H. W., Jr., LaSalle, P., and Thompson, W. B. (eds.), Late Pleistocene history of northeastern New England and adjacent Quebec: Geological Society of America, Special Paper 197, p. 29-44.

Smith, G. W., 1999, Surficial geology of the Portsmouth 7.5-minute quadrangle, York County, Maine: Maine Geological Survey, Open-File Report 99-127, 5 p.

Stuiver, M., and Borns, H. W., Jr., 1975, Late Quaternary marine invasion in Maine—its chronology and associated crustal movement: Geological Society of America, Bulletin, v. 86, p. 99-104.

Thompson, W. B., 1979, Surficial geology handbook for coastal Maine: Maine Geological Survey, 68 p.

Thompson, W. B., 1982, Recession of the late Wisconsinan ice sheet in coastal Maine, *in* Larson, G. J. and Stone, B. D. (eds.), Late Wisconsinan glaciation of New England: Kendall/Hunt Pub. Co., Dubuque, p. 211-228.

Thompson, W. B., and Borns, H. W., Jr., 1985, Till stratigraphy and Late Wisconsinan deglaciation of southern Maine -- A review: Geographie Physique et Quaternaire, v. 39, no. 2, p.199-214.

Thompson, W. B., and Smith, G. W., 1988, Pleistocene stratigraphy of the Augusta and Waldoboro areas, Maine: Maine Geological Survey, Bulletin 27, 36 p.

Tolman, A. L., and Lanctot, E. M., 1985, Hydrogeologic data for significant sand and gravel aquifers in parts of York and Cumberland Counties, Maine: Maine Geological Survey, Open-File Map 85-93, scale 1:50,000.

APPENDIX A. SITE, WELL, OR TEST HOLE LOGS (R=Refusal)

Number	Description of log*
TH-1	8 cy, st / 5 cy, st, s / 3 sg / R
TH-2	5 s, st / 4 cy, st, s / 5s, st / R
TH-3	9 cy, st, s / 55 cy, st, s (soft) / 3 s / R
TH-4	4 s / 7 cy, st / 57, cy, st, s / R
TH-5	6 s / 4 cy, og / 4 cy, st, s, / 7 cy, st, s (soft) / 1 sg / R
TH-6	2 g + cy. 67 cy / 8 s / R
TH-7	11 cy / 16 cy (soft) / R
TH-8	1 s / 11 cy, st / 45 cy, s, g / 6 d / R
TH—9	4 st / 5 cy / 5 s / 22 cy / 54 cy+s / 2 d
TH-10	5 st / 10 cy + s / 4 s / 4 g, s / 6 dt / R
TH-11	0-3 s,st / rk + / or cy, st, s
TH-12	2 s, st / 2 s, c, p, st, cy / 2 sg, ds
TH-13	12 water / 10 s / 32 st, cy / 4 s / rk (slaty quartzite)
TH-14	2 dt, cy / 2-3 s, st / 3-4 cy, st, s
TH-15	2-3 s, st, p / 2 cy, st
TH-16	3 s, st, cy / rk
TH-17	2 af, s / 3 s, st
TH-18	2-3 c,b / 12 u / 3-4 d+ / or rk
TH-19	3 s / 2 p, c, b / s, g
TH-20	5-10 g / 20 s / R
TH-21	6 s, p / 4-5 u / 2 cy / d + rk
TH-22	1 st, p, s, c / 5 cy
TH-23	3 s / 3-5 s, st, cy / rk
TH-24	25 s, g / 15 u / rk
TH-25	4-6 c, b, p / 25 u / s
TH-26	2-5 p, c, b / 10 u / 3 s
TH-27	2-3 s, p / 30-35 s / rk
TH-28	2 s / 3-4 s, p / cy
TH-29	8 g / 20 cy + g / rk

* Numbers are thicknesses in feet; see materials map for explanation of letter symbols.

APPENDIX B. DETAILED SITE OBSERVATIONS
(Field data sheets describing details of sites on file at the Maine Geological Survey)

Number	Description of site*
B 1	0-4 s, st, cy / 1 dy / rk
B 2	5 s, p
B 3	3 - 20 s, p / 4 s
B 4	2 ps / 2 s, p, c, st / 4 - 6 s, p, c
B 5	5 s, st, cy
B 6	2 pc / 15 - 20 s, p, c / s + cy
B 6a + b	(described on filed sheet)
B 7	1 - 2 s, p, c, b (lag boulder gravel)./2 - 3 p
B 8	4 s + st, cy / cy
B 9	5 - 6 p, s, c / cy + rk
B 10	3 sp (iron-cemented) / 3 - 4 s / cy + / or rk
B 11	4 - 7 s, p or p, s, c, b / cy + / or rk
B 12	1 - 2 c, p, b / 14 u / 4 - 16 cy / 10 - 12 s / rk
B 13	5 p, s, c / 3 s, p, st, cy
B 14	1 - 2 p, s, c, b / 18 s and 2 cy-p / 5 cy + p, c
B 15	2 st, s, p / 2 s (iron-cemented) / p + rk
B 16	4-6 p, s, c, and sp / cy (in places) / d+ rk
B 17	7 p, b, c / 2 s / 1 p, c / 2u / cy, st, s
B 18	2 p / 3 s / 1 p, c, cy

* Numbers are thicknesses in feet; see materials map for explanation of letter symbols.