HARRIMAN

ADDENDUM

Date May 4, 2015

To Prospective Bidders

Re Addendum No. 2 to the Bidding Documents for:

SMCC
Hildreth Lab Renovation
Room 208
South Portland, Maine
Project No. 14548

This Addendum forms a part of the Contract Documents and modifies the original Bidding documents dated April 23, 2015 and Addendum No. 1 dated April 27, 2015. Modifications include provisions for air conditioning system for additional areas of the building's second floor.

This Addendum consists of two pages, Specification Sections 075910, 230900 and 237413, and Drawings as listed on page two.

Harriman

Mark D. Lee, AIA, LEED AP
Principal

46 HARRIMAN DRIVE
AUBURN, ME 04210
207.784.5100

123 MIDDLE STREET
PORTLAND, ME 04101
207.775.0053

ONE PERIMETER ROAD
MANCHESTER, NH 03103
603.626.1242

www.harriman.com

CHANGES TO SPECIFICATIONS

1. SECTION 075910 - SINGLE-PLY MEMBRANE ROOF PATCHING
   a. Issued with this Addendum.

2. SECTION 230900 – INSTRUMENTATION AND CONTROL FOR MECHANICAL SYSTEMS
   a. Revised and reissued with this Addendum.

3. SECTION 237413 – PACKAGED, OUTDOOR, CENTRAL-STATION AIR-HANDLING UNITS
   a. Issued with this Addendum.

DRAWINGS REVISED AND REISSUED WITH THIS ADDENDUM DATED 05-04-15:

1. P10.1 - FIRST FLOOR PART PLANS
2. P10.2 - SECOND FLOOR PART PLANS
3. M05.1 - FIRST FLOOR DUCTWORK DEMOLITION
4. M05.2 - SECOND FLOOR DEMOLITION DUCTWORK
5. M10.2 - SECOND FLOOR DUCTWORK
6. M20.2 - SECOND FLOOR PIPING
7. M31.1 - SECTIONS
8. M40.1 - SCHEDULES
9. E00.1 - ELECTRICAL LEGEND, NOTES AND SCHEDULES
10. E05.1 - SECOND FLOOR EXISTING CONDITIONS PLAN
11. E20.1 - GROUND FLOOR PLAN POWER SYSTEMS

DRAWINGS ISSUED WITH THIS ADDENDUM DATED 05-04-15:

1. A15.1 - AC COORDINATION PLANS
2. M06.1 - FIRST FLOOR DEMOLITION PIPING
3. M06.2 - SECOND FLOOR DEMOLITION PIPING
4. M20.1 - FIRST FLOOR PIPING
5. SKA1 - MECHANICAL UNIT SUPPORT FRAMING

SECTION 075910 - SINGLE-PLY MEMBRANE ROOF PATCHING

PART 1 - GENERAL

1.1 RELATED DOCUMENTS

A. Drawings and general provisions of the Contract, including General and Supplementary Conditions and Division 01 Specification Sections, apply to this Section.

1.2 SUMMARY

A. This Section includes the following:
   1. Alterations and patching to the existing EPDM roofing system.

B. Related Sections include the following:
   1. Division 06 Section "Rough Carpentry" for wood nailers, curbs, and blocking.

1.3 DEFINITIONS

A. Roofing Terminology: Refer to ASTM D 1079 and glossary of NRCA's "The NRCA Roofing and Waterproofing Manual" for definition of terms related to roofing work in this Section.

1.4 DESIGN REQUIREMENTS

A. Roof flashing details shall be consistent with those shown on the drawings. Membrane manufacturer's recommended flashing detail may be considered by the Architect when no detail is provided.

1.5 SUBMITTALS

A. General: Submit in accordance with Division 01 Section "Submittal Procedures."

B. Shop Drawings: Submit shop drawings for roofing system replacement patches and restoration work, including roof modification locations, penetration and flashing details, and special conditions.
   1. Submit copy of shop drawings to manufacturer of existing roofing for review and approval to maintain existing warranty, if still in effect.

C. Warranties: Special warranties specified in this Section.

1.6 QUALITY ASSURANCE

A. Source Limitations: Obtain primary single-ply membrane roofing from original manufacturer. Provide secondary materials by same manufacturer or as recommended in writing by manufacturer of primary materials.

B. Coordinate alterations to existing roofing with original manufacturer to maintain warranty, if still in effect. The results of the warranty inspection by the system manufacturer shall be submitted in writing to Owner for their review and records.

1.7 DELIVERY, STORAGE AND HANDLING

A. Deliver roofing materials to Project site in original containers with seals unbroken and labeled with manufacturer's name, product brand name and type, date of manufacture, and directions for storing and mixing with other components. Comply with manufacturer's written instructions for proper material storage.

B. Store liquid materials in their original undamaged containers in a clean, dry, protected location and within the temperature range required by roofing system manufacturer. Protect stored liquid material from direct sunlight.
   1. Discard and legally dispose of liquid material that cannot be applied within its stated shelf life.

C. Handle and store roofing materials and place equipment in a manner to avoid permanent deflection of deck.

D. Do not overload any portion of building, either by use of or placement of equipment, storage of debris, or storage of materials. Construction loads shall not exceed 25 pounds per square foot.

1.8 PROJECT CONDITIONS

A. Weather: Proceed with work when existing and forecasted weather conditions permit work to be performed in accordance with manufacturer's written recommendations and warranty requirements.

B. Substrate Conditions: Do not begin roofing installation until substrates have been inspected and are determined to be in satisfactory condition. All surfaces shall be smooth, dry, clean, free of fins or sharp edges, loose or foreign materials, oil or grease. No work shall proceed when moisture is present on the roof or in the substrate materials.

C. Provide temporary waterstops and closures at the end of each workday to prevent water from entering building and existing roof system and remove before proceeding with the next day's work.

D. Protect existing roofing at access locations, work areas and construction traffic locations with plywood or other appropriate material to prevent damage to the existing roof system. Remove upon completion of the work.

1.9 WARRANTY

A. Notify manufacturer of existing roofing and assist Owner in applying for continuation of original warranty, if still in effect.

B. Special Project Warranty: Upon completion of the work and prior to acceptance of the work, the Roofing Contractor shall submit a guarantee to Owner. The guarantee shall be for a 2-year period and shall cover any defect in the work or materials. Warranty commencement shall be

the same date as substantial project completion. This warranty is in addition to the manufacturer's warranty.

PART 2 - PRODUCTS

2.1 GENERAL

A. Performance: Provide roofing materials identified to be of generic type indicated and tested to show compliance with required performances.

B. Material Compatibility: Provide roofing materials that are fully compatible with existing materials and one another under conditions of service and application required, as demonstrated by roofing membrane manufacturer based on testing and field experience. Provide separation materials as required to eliminate contact between incompatible materials.

2.2 EPDM MEMBRANE

A. Manufacturer's standard installation to match existing installation type.

B. EPDM Roofing Membrane: ASTM D 4637, Type I, nonreinforced uniform, flexible sheet made from EPDM.
   1. Thickness: Match existing.
   2. Exposed Face Color: Match existing.

2.3 AUXILIARY MATERIALS

A. General: Auxiliary materials recommended by roofing system manufacturer for intended use and compatible with membrane roofing.

B. Sheet Flashing: Manufacturer's standard sheet flashing of same material, thickness, type, reinforcement, and color as existing EPDM sheet membrane.

C. Bonding Adhesive: Manufacturer's standard bonding adhesive for EPDM membrane, and solvent-based bonding adhesive for base flashings. Adhesive shall be formulated to withstand minimum 90-psf uplift force.

D. Metal Flashing Termination Bars: Manufacturer's standard predrilled stainless steel or aluminum bars, approximately 1 by 1/8 inch thick; with anchors. Fasten bar to wall as recommended by membrane manufacturer.

E. Fasteners: Factory-coated steel fasteners and metal or plastic plates meeting corrosion-resistance provisions in FMG 4470, designed for fastening membrane to substrate, and acceptable to membrane roofing system manufacturer.

F. Cleaner: Clear, solvent based cleaner used to loosen and remove dirt and other contaminants from the surface of exposed EPDM membrane to receive restoration repairs.

G. Miscellaneous Accessories: Provide pourable sealers, preformed cone flashings, preformed inside and outside corner sheet flashings, T-joint covers, termination reglets, cover strips, and other accessories. Provide manufacturer’s standard premolded accessories.

2.4 INSULATING MATERIALS

A. General: Provide insulating materials to comply with requirements indicated for materials and with referenced standards in sizes to fit applications indicated, selected from manufacturer's standard thicknesses, widths, and lengths.
   1. Provide tapered boards where indicated for sloping to drain. Fabricate with taper of 1/4 inch per foot, unless otherwise indicated.

B. Match existing insulation and thickness.

2.5 AUXILIARY INSULATION MATERIALS

A. Mechanical Anchors: Corrosion-resistant, fluoropolymer coating; type as recommended by insulation manufacturer for deck type and complying with fire and insurance wind-uplift rating requirements.
   1. Provide system tested and approved for I-90 wind-uplift rating.

B. Cold Fluid-Applied Adhesive: Manufacturer's standard cold fluid-applied adhesive formulated to adhere roof insulation to substrate.

PART 3 - EXECUTION

3.1 EXAMINATION

A. Examine and document existing substrates, areas, and conditions, with Installer present, for compliance with the roofing system manufacturer's requirements.
   1. Document deteriorated roof conditions such as wet insulation that are encountered and need correcting.
   2. Verify that wood blocking, curbs, and nailers are securely anchored to roof deck at penetrations and terminations and that nailers match thicknesses of insulation.

B. Proceed with installation only after unsatisfactory conditions have been corrected.

3.2 PREPARING SUBSTRATE

A. General: Comply with manufacturers' instructions to prepare substrate to receive single-ply membrane system.

B. Clean substrate of dust, debris, and other substances detrimental to single-ply system installation. Remove sharp projections.

C. Existing Membrane Cleaning: Remove as much loose material s possible from the membrane surface where restoration work occurs. Accumulated dirt that is built up on the surface shall be cleaned with detergent and water. Rinse area thoroughly with clean water and allow to dry completely.

D. Install flashings, and accessory items as shown and as recommended by manufacturer.

E. Prime substrate or install slip sheet where recommended by manufacturer of materials being installed.

F. Prevent materials from entering and clogging drains and conductors and from spilling or migrating onto surfaces of other work.

G. Complete terminations and base flashings and provide temporary seals to prevent water from entering completed sections of roofing system at the end of the workday or when rain is forecast. Remove and discard temporary seals before beginning work on adjoining roofing.

3.3 INSTALLING INSULATION

A. General: Where required, extend insulation full thickness in two layers, or in multiple layers over entire surface to be insulated to match thickness of existing insulation, cutting and fitting tightly around obstructions. Form crickets, saddles, and tapered areas with additional material as required for proper drainage of membrane.
   1. Provide tapered units to suit existing drainage pattern.

B. Secure roof insulation to substrate with mechanical anchors of type and spacing required by the system manufacturer, but in no case provide less than one anchor per 4 sq. ft. of surface area or less anchorage than required by FM Loss Prevention Data Sheet 1-28.

3.4 INSTALLING MEMBRANE

A. Install roofing membrane over area to receive roofing according to roofing system manufacturer's written instructions.

B. Accurately align roofing membranes and maintain uniform side and end laps of minimum dimensions required by manufacturer.

C. Fasteners shall be of sufficient length to penetrate all layers of insulation and minimum of 3/4 inch beyond structural deck.

D. Mechanically fasten roofing membrane securely at terminations, penetrations, and perimeter of roofing.

E. Apply roofing membrane with side laps shingled with slope of roof deck where possible.

F. Seams: Clean seam areas with manufacturers recommended cleaning solution, overlap roofing membrane and hot-air weld seam tape side and end laps of roofing membrane according to manufacturer's written instructions to ensure a watertight seam installation.
   1. Repair tears, voids, and lapped seams in roofing membrane that does not meet requirements.

G. Install roofing membrane and auxiliary materials to tie in to existing roofing.

3.5 FLASHING INSTALLATION

A. Install sheet flashings and preformed flashing accessories and adhere to substrates according to membrane roofing system manufacturer's written instructions.

B. Apply bonding adhesive to substrate and underside of sheet flashing at required rate and allow to partially dry. Do not apply bonding adhesive to seam area of flashing.

C. Flash penetrations and field-formed inside and outside corners with sheet flashing.

D. Clean seam areas and overlap and firmly roll sheet flashings into the adhesive. Weld side and end laps to ensure a watertight seam installation.

E. Terminate and seal top of sheet flashings and mechanically anchor to substrate through termination bars.

3.6 PROTECTING AND CLEANING

A. Protect membrane roofing system from damage and wear during remainder of construction period. When remaining construction will not affect or endanger roofing, inspect roofing for deterioration and damage, describing its nature and extent in a written report, with copies to Architect and Owner.

B. Correct deficiencies in or remove membrane roofing system that does not comply with requirements, repair substrates, and repair or reinstall membrane roofing system to a condition free of damage and deterioration at time of Substantial Completion and according to warranty requirements.

3.7 ROOFING INSTALLER'S WARRANTY (For roof that does not carry a current manufacturer's warranty)

A. WHEREAS <Insert name> of <Insert address>, herein called the "Roofing Installer," has performed roofing and associated work ("work") on the following project:
   1. Owner: <**Insert name of Owner.**>
   2. Address: <**Insert address.**>
   3. Building Name/Type: <**Insert information.**>
   4. Address: <**Insert address.**>
   5. Area of Work: <**Insert information.**>
   6. Acceptance Date: <**Insert date.**>
   7. Warranty Period: <**Insert time.**>
   8. Expiration Date: <**Insert date.**>

B. AND WHEREAS Roofing Installer has contracted (either directly with Owner or indirectly as a subcontractor) to warrant said work against leaks and faulty or defective materials and workmanship for designated Warranty Period,

C. NOW THEREFORE Roofing Installer hereby warrants, subject to terms and conditions herein set forth, that during Warranty Period he will, at his own cost and expense, make or cause to be made such repairs to or replacements of said work as are necessary to correct faulty and defective work and as are necessary to maintain said work in a watertight condition.

D. This Warranty is made subject to the following terms and conditions:

1. Specifically excluded from this Warranty are damages to work and other parts of the building, and to building contents, caused by:
   a. Lightning;
   b. Peak gust wind speed exceeding 55 mph;
   c. Fire;
   d. Failure of roofing system substrate, including cracking, settlement, excessive deflection, deterioration, and decomposition;
   e. Faulty construction of parapet walls, copings, chimneys, skylights, vents, equipment supports, and other edge conditions and penetrations of the work;
   f. Vapor condensation on bottom of roofing; and
   g. Activity on roofing by others, including construction contractors, maintenance personnel, other persons, and animals, whether authorized or unauthorized by Owner.
2. When work has been damaged by any of foregoing causes, Warranty shall be null and void until such damage has been repaired by Roofing Installer and until cost and expense thereof have been paid by Owner or by another responsible party so designated.
3. Roofing Installer is responsible for damage to work covered by this Warranty but is not liable for consequential damages to building or building contents resulting from leaks or faults or defects of work.
4. During Warranty Period, if Owner allows alteration of work by anyone other than Roofing Installer, including cutting, patching, and maintenance in connection with penetrations, attachment of other work, and positioning of anything on roof, this Warranty shall become null and void on date of said alterations, but only to the extent said alterations affect work covered by this Warranty. If Owner engages Roofing Installer to perform said alterations, Warranty shall not become null and void unless Roofing Installer, before starting said work, shall have notified Owner in writing, showing reasonable cause for claim, that said alterations would likely damage or deteriorate work, thereby reasonably justifying a limitation or termination of this Warranty.
5. During Warranty Period, if original use of roof is changed and it becomes used for, but was not originally specified for, a promenade, work deck, spray-cooled surface, flooded basin, or other use or service more severe than originally specified, this Warranty shall become null and void on date of said change, but only to the extent said change affects work covered by this Warranty.
6. Owner shall promptly notify Roofing Installer of observed, known, or suspected leaks, defects, or deterioration and shall afford reasonable opportunity for Roofing Installer to inspect work and to examine evidence of such leaks, defects, or deterioration.
7. This Warranty is recognized to be the only warranty of Roofing Installer on said work and shall not operate to restrict or cut off Owner from other remedies and resources lawfully available to Owner in cases of roofing failure. Specifically, this Warranty shall not operate to relieve Roofing Installer of responsibility for performance of original work according to requirements of the Contract Documents, regardless of whether Contract was a contract directly with Owner or a subcontract with Owner's General Contractor.

E. IN WITNESS THEREOF, this instrument has been duly executed this <**Insert day**> day of <**Insert month**>, <**Insert year**>.

1. Authorized Signature: <**Insert signature**>.
2. Name: <**Insert name**>.
3. Title: <I**nsert title**>.

END OF SECTION 075910

This Page Left Intentionally Blank

SECTION 230900 – INSTRUMENTATION AND CONTROL FOR MECHANICAL SYSTEMS

PART 1 - GENERAL

1.1 SECTION INCLUDES

A. Direct Digital Control (DDC) equipment.

B. Software.

C. Installation.

1.2 PRODUCTS FURNISHED BUT NOT INSTALLED UNDER THIS SECTION

A. Piping:
1. Control Valves – piping connections.
2. Temperature Sensor Wells and Sockets.

B. Ductwork:
1. Access Doors.
2. Dampers - ductwork connections.

1.3 SYSTEM DESCRIPTION

A. A fully integrated Automatic Temperature Control (ATC) Building Management and Control System incorporating Direct Digital Control (DDC), energy management, equipment monitoring, and control consisting of the following:
1. Microcomputer-based equipment controllers interfacing directly with sensors, actuators and environmental delivery systems.
2. Electric controls and mechanical devices for items indicated on Drawings and described hereinafter including dampers, valves, and motor drives.
3. Microcomputer-based terminal controllers interfacing with sensors, actuators, and terminal equipment control devices.

B. Submittals, data entry, electrical installation, programming, start up, test and validation, instruction of Owner's representative on maintenance and operation, as built documentation, and system warranty.

C. System Summary:
1. The intent of this project is to extend the existing ATC system with electric actuators for the renovated portions of the building.
2. Items which according to the Sequence of Operations are designated to be controlled by a thermostat, such as Cabinet unit heaters, unit heaters, terminal heating units, and the like, shall have “stand-alone” control, and are not required to be interfaced with the DDC system. At the Contractor’s option, they may have DDC control, but with local setpoint control.
3. Rooftop HVAC units, and terminal heating units which are designated to be controlled by a temperature sensor shall be interfaced with the DDC system, such that monitoring

and setpoint adjustment shall be accomplished through the graphical user interface at the operator workstation.

D. Note: The terms “BMS”, “ATC”, and “DDC” are used somewhat interchangeably throughout this Section.

1.4 SUBMITTALS

A. Submit in accordance with Division 01 Section “Submittal Procedures.”

B. Qualification Data: For Installer and manufacturer.

C. Product Data: Include manufacturer's technical literature for each control device. Indicate dimensions, capacities, performance characteristics, electrical characteristics, finishes for materials, and installation and startup instructions for each type of product indicated.
   1. Hardware: Bill of materials of equipment indicating quantity, manufacturer, and model number. Include technical data for control units, transducers/transmitters, sensors, actuators, valves, relays/switches, control panels, and operator interface equipment.
   2. Controlled Systems: Instrumentation list with element name, type of device, manufacturer, model number, and product data. Include written description of sequence of operation including schematic diagram.

D. Shop Drawings: Detail equipment assemblies and indicate dimensions, weights, loads, required clearances, method of field assembly, components, and location and size of each field connection.
   1. Bill of materials of equipment indicating quantity, manufacturer, and model number.
   2. Schematic flow diagrams showing fans, coils, dampers, valves, and control devices.
   3. Wiring Diagrams: Power, signal, and control wiring.
   4. Details of control panel faces, including controls, instruments, and labeling.
   5. Written description of sequence of operation.
   6. Schedule of dampers including size, leakage, and flow characteristics.
   7. Schedule of valves including size and flow characteristics.
   8. DDC System Hardware:
      a. Wiring diagrams for control units with termination numbers.
      b. Schematic diagrams and floor plans for field sensors and control hardware.
      c. Schematic diagrams for control, communication, and power wiring, showing trunk data conductors and wiring between operator workstation and control units.
   9. Control System Software: List of color graphics indicating monitored systems, data (connected and calculated) point addresses, output schedule, and operator notations.
   10. Controlled Systems:
      a. Schematic diagrams of each controlled system with control points labeled and control elements graphically shown, with wiring.
      b. Scaled drawings showing mounting, routing, and wiring of elements including bases and special construction.
      c. Written description of sequence of operation including schematic diagram.

E. Data Communications Protocol Certificates: Certify that each proposed DDC system component complies with the open protocol standard compatible with the Owner’s existing system.

F. Software and Firmware Operational Documentation: Include the following:
   1. Software operating and upgrade manuals.
   2. Program Software Backup: On a magnetic media or CD, complete with data files.
   3. Device address list.
   4. Printout of software application and graphic screens.

G. Field quality-control test reports.

H. Operation and Maintenance Data.

1.5 OPERATION AND MAINTENANCE DATA

A. Submit under provisions of Division 01 Section “Operation and Maintenance Data.”

B. For mechanical instrumentation and control system to include in emergency, operation, and maintenance manuals.

C. In addition to items specified in Division 01, include the following:
   1. Maintenance instructions and lists of spare parts for each type of control device.
   2. Exploded assembly views.
   3. Interconnection wiring diagrams with identified and numbered system components and devices.
   4. Inspection period, cleaning methods, cleaning materials recommended, and calibration tolerances.
   5. Calibration records and list of set points.

D. Manuals: Provide the following:
   1. An Operator's Manual with graphic explanations of keyboard use for operator functions specified under Operator Training.
   2. Computerized printouts of equipment controller’s data file construction including point processing assignments, physical terminal relationships, scales and offsets, command and alarm limits, and others as applicable.
   3. A manual including revised as-built documents of materials required under the paragraph "SUBMITTALS" in this Specification Section.
   4. Provide the quantity of manuals specified in Division 01, and at least 2 Operator’s Manuals and 2 As-Built Manuals to the Owner. Refer to other Sections of the Specifications for project requirements for quantities of documentation.

1.6 CODES AND APPROVALS

A. The complete temperature control installation shall be in strict accordance to the national and local electrical codes and the electrical Division of these Specifications. Devices designed for or used in line voltage applications shall be UL listed. Microprocessor based remote and central devices shall be UL916 Listed.

B. Electronic equipment shall conform to the requirements of FCC regulation Part 15, Section 15 governing radio frequency electromagnetic interference and be so labeled.

1.7 QUALITY ASSURANCE

A. Installer Qualifications: Automatic control system manufacturer's authorized representative who is trained and approved for installation of system components required for this Project.

B. Electrical Components, Devices, and Accessories: Listed and labeled as defined in NFPA 70, Article 100, by a testing agency acceptable to authorities having jurisdiction, and marked for intended use.

C. Comply with ASHRAE Standard 135 (BACnet) for DDC system components.

1.8 DELIVERY, STORAGE, AND HANDLING

A. Deliver, store, protect and handle products to site under provisions of Division 01 Section “Project Requirements.”

B. Factory-Mounted Components: Where control devices specified in this Section are indicated to be factory mounted on equipment, provide shipping of control devices to equipment manufacturer, in a timely manner coordinated with the equipment manufacturer.

C. Components to be Installed under Other Sections: For components to be installed under other Sections of the Specifications, provide delivery of components to appropriate Subcontractors, provide installation instructions, and supervise their installation.

1.9 COORDINATION

A. Coordinate location of thermostats and other exposed control sensors with Contract Drawings before installation.

B. Coordinate equipment with Division 26 and existing fire alarm system to achieve compatibility with equipment that interfaces with that system.

C. Coordinate line-voltage power supplies with Division 26.

1.10 WARRANTY

A. Components, system software, parts, and assemblies furnished under this Section shall be guaranteed against defects in materials and workmanship for 1 year from acceptance date.

B. Labor to troubleshoot, repair, reprogram, or replace system components shall be provided at no charge to the Owner during the warranty period.

C. Corrective software modifications made during warranty service periods shall be updated on user documentation and on user and manufacturer archived software disks.

PART 2 - PRODUCTS

2.1 ACCEPTABLE SUPPLIERS

A. Acceptable Manufacturers and Installers:
   1. TAC, I/A Series, installed by Maine Controls, 400 Presumpscot Street, Portland, ME 04103.
   2. No Substitutions.

B. The Temperature Control Contractor (or Subcontractor) shall hereinafter be referred to as the ATC Contractor.

2.2 SYSTEM REQUIREMENT

A. Provide complete direct digital and electronic control system consisting of temperature sensors, thermostats, control valves, dampers, operators, indicating devices, interface equipment, and other apparatus required to operate mechanical system and to perform functions specified. Provide controls for the following:
   1. Air conditioning systems.
   2. Air moving and handling systems.
   3. Control dampers and valves.
   4. Heating coils.
   5. Fire alarm system interfaces.
   6. Provide hardware and software required for remote monitoring of the ATC system through modem or ethernet interface.

2.3 DATA INPUTS AND OUTPUTS

A. Input/output sensors and devices shall be closely matched to the requirements of the remote panel for accurate, responsive, noise-free signal input/output. Control input response shall be high-sensitivity and matched to the loop gain requirements for precise and responsive control.

B. Duct temperature sensors shall be rigid stem or averaging type as required. Provide water sensors with a separable copper, monel or stainless-steel well.

C. Control relays and analog output transducers shall be compatible with equipment controllers output signals. Relays shall be suitable for the loads encountered. Analog output transducers shall be designed for precision closed loop control with pneumatic repeatability error no greater than 1/2 percent.

D. Data inputs and outputs shall be compatible with variable frequency drives; see Division 23 Section “Common Motor Requirements for HVAC Equipment.”

2.4 GRAPHIC PROGRAMMING

A. Graphic Programming. Provide hardware and software required for complete equipment controllers ATC programming of plant programs including plant system schematic development, I/O hardware point definition, hardware and software text point descriptors, ATC

algorithmic development, a controller software loading utility, and a live programming test facility. At a minimum, the following shall be provided in the graphics package:

1. Floor plans showing temperature sensors - control and status.
2. Air handling units, rooftop HVAC units and associated pumps, fans, dampers - control and status.

B. Provide a Boolean logic switching table matrix module for building ON-OFF commands from combinations of and or functions.

C. Provide a program testing utility which allows live and dynamic monitoring of the graphically displayed control programs provided.

D. In addition to training specified elsewhere in this Specification, provide 4 days of additional programming training, at a minimum of 4 hours training per day. These 4 days of additional training shall be provided during the 1 year warranty period. They are intended for use by the Owner as questions regarding system operation arise. Coordinate with the Owner.

E. Provide 2 sets of programmer's manuals.

2.5 CONTROLLER SOFTWARE

A. Energy Management application programs and associated data files shall be in non-volatile memory.

1. Optimum Start shall delay equipment start-up based on global outdoor temperature, space temperature, and system response to assure that comfort conditions are reached at scheduled occupancy. The optimum start program shall operate fully stand-alone in the local equipment controllers.
2. A load reset program shall be provided to assure that only the minimum amount of heating, cooling, and electrical energy is supplied to satisfy zone temperature requirements.

B. Control Software:

1. Each equipment controllers shall contain up to 20 unique user modifiable time programs.
2. Control Application Software shall be customized strictly to meet the detailed requirements of the "Sequence of Operation" specified hereinafter. Equipment controllers and terminal controllers shall be fully programmable. Initial software shall be fully modifiable, and not restricted by vendor's specific configuration guidelines. Equipment controllers control software shall be designed via a graphic programming facility, the detailed graphic design of which shall be provided as system documentation. Control strategies shall be advanced as noted with stabilizing setpoint ramps and procedures to assure slow loading of variable load equipment and economizer modes to prevent unsafe overshoot of controlled pressure and unsafe undershoot of mixed air temperatures during start-up and transition periods.

C. Management Software:

1. Each equipment controllers shall be provided with a trend archive of at least the last 200 events (digital transitions or analog value changes) of any user selected group of up to 20 points. A stored event shall include date and time, and value or status. Point events shall be displayable at local panels as trend logs for evaluation of control system performance.
2. Each equipment controllers shall monitor analog input points and specified digital points for off-normal conditions. Each alarm shall have an "alarm delay" attribute which shall

determine how long (in seconds) a point must be in an off-normal state prior to being considered in an alarm state.

D. Communications Software: Each equipment controllers shall have a full master peer-to-peer communications module to support global data sharing, hierarchical control, and global control strategies specified.

2.6 DATA COMMUNICATIONS

A. Equipment controllers shall be interconnected via a primary communications network. Terminal controllers shall also be connected together via secondary networks to provide data concentration and parallel processing. Networks shall support sensor sharing, global application programs, and bus-to-bus communications without the presence of a host PC.

B. The equipment controller's communications network shall support true peer protocol such that loss of any single device will not cause total bus failure.

2.7 GENERAL

A. ATC setpoints, reset schedules, time programs, historical trends shall be displayable at local ATC panels and on the system's operator workstations.

B. I/O Interface: Hardwired inputs and outputs may tie into system through controllers. Protect points so that shorting will cause no damage to controllers.
   1. Binary Inputs: Allow monitoring of on-off signals without external power.
   2. Pulse Accumulation Inputs: Accept up to 10 pulses per second.
   3. Analog Inputs: Allow monitoring of low-voltage (0- to 10-V dc), current (4 to 20 mA), or resistance signals.
   4. Binary Outputs: Provide on-off or pulsed low-voltage signal, selectable for normally open or normally closed operation with 3-position (on-off-auto) override switches and status lights.
   5. Analog Outputs: Provide modulating signal, either low voltage (0- to 10-V dc) or current (4 to 20 mA).
   6. Tri-State Outputs: Provide two coordinated binary outputs for control of 3-point, floating-type electronic actuators.
   7. Universal I/Os: Provide software selectable binary or analog outputs.

C. Power Supplies: Transformers with Class 2 current-limiting type or overcurrent protection; limit connected loads to 80 percent of rated capacity. DC power supply shall match output current and voltage requirements and be full-wave rectifier type with the following:
   1. Output ripple of 5.0 mV maximum peak to peak.
   2. Combined 1 percent line and load regulation with 100-microsecond response time for 50 percent load changes.
   3. Built-in overvoltage and overcurrent protection and be able to withstand 150 percent overload for at least 3 seconds without failure.

D. Power Line Filtering: Internal or external transient voltage and surge suppression for workstations or controllers with the following:
   1. Minimum dielectric strength of 1000 V.
   2. Maximum response time of 10 nanoseconds.

3. Minimum transverse-mode noise attenuation of 65 dB.
4. Minimum common-mode noise attenuation of 150 dB at 40 to 100 Hz.

2.8 SPARE POINTS

A. Provide a minimum of 10 percent spare points or 16 spare points, whichever is greater, in each ATC control panel for future use. Spare points shall be equally distributed among analog input, analog output, digital input and digital output. It is not intended that spare points be provided in unitary control panels which serve VAV boxes, unit ventilators, fan coil units and heat pumps. It is intended that spare points be provided in master control panels and in panels which serve boiler/mechanical rooms and major equipment such as air handling units.

2.9 CONTROL CABLE

A. Provide electronic and fiber-optic cables for control wiring in accordance with Division 27.

2.10 ACTUATORS

A. Electric Motors: Size to operate with sufficient reserve power to provide smooth modulating action or 2-position action.
   1. Comply with requirements in Division 23 Section "Common Motor Requirements for HVAC Equipment."
   2. Permanent Split-Capacitor or Shaded-Pole Type: Gear trains completely oil immersed and sealed. Equip spring-return motors with integral spiral-spring mechanism in housings designed for easy removal for service or adjustment of limit switches, auxiliary switches, or feedback potentiometer.

B. Electronic Actuators: Direct-coupled type designed for minimum 60,000 full-stroke cycles at rated torque.
   1. Manufacturers:
      a. Belimo.
      b. Schneider Electric DuraDrive
      c. Schneider Electric Andover Continuum Infinet II i2866 (with integral VAV controller)
   2. Valves: Size for torque required for valve close-off at maximum pump differential pressure.
      a. Nonspring-Return Motors for Valves Larger Than NPS 2-1/2 (DN 65): Size for running torque of at least 150 lbf-in. (16.9 N-m) and breakaway torque of at least 300 lbf-in. (33.9 N-m).
      b. Spring-Return Motors for Valves Larger Than NPS 2-1/2 (DN 65): Size for running and breakaway torque of at least 150 lbf-in. (16.9 N-m).
   3. Dampers: Size for running torque as recommended by the damper manufacturer for tight sealing under design operating static pressures and velocities. Submit damper manufacturer’s torque chart in same submittal as actuator selection table.
      a. For dampers which do not list torque values, provide torque calculated as follows:
         1) Damper with Edge Seals: 7 inch-lb/sq. ft. (8.6 N-m/sq. m) of damper.
         2) Damper without Edge Seals: 5 inch-lb/sq. ft. (6.22 N-m/sq. m) of damper.
      b. Nonspring-Return Motors for Dampers Larger Than 25 Sq. Ft (2.3 sq. m): Size for running torque of at least 150 lbf-in. (16.9 N-m) and breakaway torque of at least 300 lbf-in. (33.9 N-m).

c. Spring-Return Motors for Dampers Larger Than 25 Sq. Ft (2.3 sq. m): Size for running and breakaway torque of at least 150 lbf-in. (16.9 N-m).
d. Dampers with 2- to 3-Inch wg (500 to 750 Pa) of Pressure Drop or Face Velocities of 1000 to 2500 fpm (5 to 13 m/s): Increase running torque by a factor of 1.5.
e. Dampers with 3- to 4-Inch wg (750 to 1000 Pa) of Pressure Drop or Face Velocities of 2500 to 3000 fpm (13 to 15 m/s): Increase running torque by a factor of 2.0.

4. Coupling: V-bolt and V-shaped, toothed cradle.
5. Overload Protection: Electronic overload or digital rotation-sensing circuitry.
6. Fail-Safe Operation: Mechanical, spring-return mechanism. Provide external, manual gear release on nonspring-return actuators.
7. Power Requirements (2-Position Spring Return): 24-V ac.
8. Power Requirements (Modulating): Maximum 10 VA at 24-V ac or 8 W at 24-V dc.
9. Proportional Signal: 2- to 10-V dc or 4 to 20 mA, and 2- to 10-V dc position feedback signal.
10. Temperature Rating: 40 to 104°F (5 to 40°C).
    a. In addition, valve actuators shall be suitable for the anticipated ambient temperature and fluid temperature. For example, actuators located within heating equipment terminal enclosures will experience higher temperatures.
11. Temperature Rating (Smoke Dampers): -22 to 250 degrees F (-30 to 121 degrees C).
12. Run Time: 30 seconds.
13. Actuator Housing: Molded or die-cast zinc or aluminum. Terminal unit actuators may be high-impact plastic with ambient temperature rating of 50 to 140 degrees F (10 to 60 degrees C) unless located in return-air plenums.
14. Damper actuators shall be provided with end switches.

2.11 CONTROL VALVES

A. Control Valves: Factory fabricated, of type, body material, and pressure class based on maximum pressure and temperature rating of piping system, unless otherwise indicated.
1. Globe-type valves are required except for those applications where terminal-unit control valves or butterfly valves are specified or detailed.
2. Ball-type valves may be substituted for other types, and shall be manufactured by Belimo, with Belimo actuators (no substitutions).
3. Valves shall be suitable for water with up to 50 percent inhibited ethylene or propylene glycol.
4. 3-way valves shall be mixing pattern, except where diverting pattern is specified, or where manufacturer requires use of diverting pattern.
5. Rubber-paddle or ball-plug type control valves such as, but not limited to, Belimo Zone Valve, Honeywell Fan-Coil Valves or the TAC Erie product line (division of Schneider Electric) are not allowed.
6. Valves with thermal-wax motors are not allowed.
7. Valves requiring cartridge replacement for service are not allowed.
8. Valves requiring special water treatment such as 50-micron filtration are not allowed.

B. Sizing: Maximum pressure drop determined with valve full-open at design flow rate and the following:
1. 2 Position: Line size.
2. 2-Way Modulating: Between one-half and one times the variable-flow load pressure drop, but not to exceed 3 psig (21 kPa).

3. 3-Way Modulating: Between one-half and one times the variable-flow load pressure drop, but not to exceed 1.5 psig (10.5 kPa).
4. Note: For modulating valves, the load pressure drop is that across the modulated portion of the system. For example, for a 3-way valve providing reset-water control at a boiler, the modulated flow is across the boiler and accessories, whereas the building loop to terminal equipment is considered constant-flow for the purposes of this valve's sizing. For a 3-way valve modulating the flow thru a coil, the coil and its pipe fittings comprise the variable-flow load. For a 3-way valve in a primary-secondary loop to a coil, where the flow thru the coil is a constant pumped flow, the variable load is in the primary-secondary bridge.

C. Hydronic system globe valves shall have the following characteristics:
1. NPS 2 (DN 50) and Smaller: Class 125 bronze (or red brass) body, bronze or brass seat, bronze trim, rising stainless steel stem, renewable brass or composition disc or plug, screwed ends, with backseating capacity, repackable under pressure. Valve may have integral union ends. Valves with ends other than threaded or factory-integral unions are not allowed.
2. NPS 2-1/2 (DN 65) and Larger: Class 125 iron body, bronze trim, rising stem, plug-type disc, flanged ends, and renewable seat and disc.
3. Internal Construction: Replaceable plugs and stainless-steel or brass seats.
   a. Single-Seated Valves: Cage trim provides seating and guiding surfaces for plug on top and bottom.
   b. Double-Seated Valves: Balanced plug; cage trim provides seating and guiding surfaces for plugs on top and bottom.
4. Flow Characteristics: 2-way valves shall have equal percentage characteristics; 3-way valves shall have linear characteristics through 1 of the ports, equal percentage through the other.
5. Close-Off (Differential) Pressure Rating: Combination of actuator and trim shall provide minimum close-off pressure rating of 150 percent of total system (pump) head for 2-way valves, and 100 percent of pressure differential across valve or 100 percent of total system (pump) head for 3-way valves.
6. Temperature Rating: 250°F (121°C).

D. Terminal Unit Control Valves: Bronze body, bronze trim, 2 or 3 ports as indicated, replaceable plugs and seats, and union and threaded ends. Valves with ends other than threaded or factory-integral unions are not allowed.
1. Applications: Duct-mounted reheat coils, VAV-box reheat coils, unit heaters, cabinet unit heaters, radiant ceiling heating panels, and fintube radiation. For other applications, see globe valve specifications above.
2. Honeywell "small linear control valves" with "linear valve actuators" (or equal) may be used only for VAV box coils and hot water duct coils; they may not be used for other coil or equipment types.
3. Rating: Class 125 for service at 125 psig (860 kPa) and 250 deg F (121 deg C) operating conditions.
4. Close-Off (Differential) Pressure Rating: Combination of actuator and trim shall provide minimum close-off pressure rating sufficient to close against pump shutoff head.
5. Flow Characteristics: 2-way valves shall have equal percentage characteristics; 3-way valves shall have linear characteristics.

2.12 ELECTRONIC SENSORS

A. Description: Vibration and corrosion resistant; for wall, immersion, or duct mounting as required.

B. Thermistor Temperature Sensors and Transmitters:
   1. Accuracy: Plus or minus 0.5°F (0.3°C) at calibration point.
   2. Wire: Twisted, shielded-pair cable.
   3. Insertion Elements in Ducts: Single point, 8 inches (200 mm) long; use where not affected by temperature stratification or where ducts are smaller than 9 sq. ft. (0.84 sq. m).
   4. Averaging Elements in Ducts: 36 inches (915 mm) long, flexible; use where prone to temperature stratification or where ducts are larger than 10 sq. ft. (1 sq. m).
   5. Insertion Elements for Liquids: Brass or stainless-steel socket with minimum insertion length of 2-1/2 inches (64-mm).
   6. Room Sensor Cover Construction: See below.
   7. Outside-Air Sensors: Watertight inlet fitting, shielded from direct sunlight.
   8. Room Security Sensors: Stainless-steel cover plate with insulated back and security screws.

C. Room Sensor Cover Construction: Manufacturer's standard locking covers.
   1. Set-Point Adjustment: Concealed.
   2. Set-Point Indication: Concealed.
   3. Thermometer: Concealed.
   4. Communications Port: Standard phone-type jack for connection of portable laptop computer and other devices. Provide at each room sensor, no exceptions.
   5. Override Pushbutton: For timed override of occupied/unoccupied cycle. Provide in private offices.

2.13 THERMOSTATS AND TEMPERATURE SENSORS

A. Thermostats and Sensors in locations in regular view by the occupants shall have covers which are simple, aesthetically pleasing, neutral in color, with manufacturer’s logo, if any, in black or neutral color, and shall fit flush to the surrounding wall surface.

B. Freezestats:
   1. Freezestat safety low limits shall be duct-mounted manual-reset and automatic-reset (see control sequences) 20-foot limited fill capillary-tube type, responsive to the coolest section of its length.
   2. Air handling systems which handle outside air (or a mix of outside air and return air) or are located outdoors shall have freezestats at hydronic and steam coils. Where freezestats are required, provide both a manual-reset type set near freezing temperature for shutdown, and an automatic-reset type set at a warmer temperature for preventive action [unless otherwise specifically indicated not to have both].
   3. Air handling systems with chilled-water coils mounted upstream of heating coils shall have freezestats on the upstream face of the chilled water coils, in addition to the freezestats on the downstream face of the heating coils.

C. Temperature Sensors:
   1. Temperature sensors shall provide a 2-wire connection to the controller that is polarity and wire type insensitive. Sensors shall have communications jacks for connection to

the communication trunk to which the controller is connected. The temperature sensor, the connected controller, and other devices on the communications bus shall be accessible by the Graphical Programming tool.

2. Provide with manual adjustment rotary or sliding dials, with a scale labeled as either temperature in degrees F, or "warmer/cooler". The input from this dial shall be programmable through the operator workstation to allow a maximum and minimum range for user adjustment. The min/max range shall initially be set at 4°F above/below the programmed setpoint. When the dial is adjusted, it shall shift both heating and cooling setpoints by the programmed amount, in proportion to the distance moved. This dial shall only affect the occupied setpoints; the unoccupied setpoints shall remain as programmed.
3. Provide with override buttons which, when depressed during unoccupied time periods, will override the zone's temperature controls and setpoints to occupied conditions for a user adjustable period of time (initially set for 2 hours).

PART 3 - EXECUTION

3.1 EXAMINATION

A. Verify that power supply and data outlet is available to control units and operator workstation.

3.2 ELECTRICAL WIRING AND CONNECTION INSTALLATION

A. Wiring and conduits shall be properly supported and run in a neat and workmanlike manner. Wiring and conduits exposed and in equipment rooms shall run parallel to or at right angles to the building structure. Wiring and conduits within enclosures shall be neatly bundled and anchored to prevent obstruction to devices and terminals. Wiring, conduits, wall boxes, and accessories shall conform to Division 26 – Electrical of the Contract Documents.

B. The ATC Contractor shall be responsible for electrical installation, including any low voltage and line voltage wiring which is required for a fully functional control system and not indicated on the Electrical Drawings or required by the Electrical Specifications (Division 26).

C. Wiring shall be in accordance with local and national Codes and regulations.

D. Provide electrical materials and installation under this Section. Requirements and standards shall be as specified in other Sections and Divisions of the Specifications, as indicated in paragraphs below.
   1. Install raceways, boxes, and cabinets in conformance to Division 26.
   2. Install building wire and cable in conformance to Division 26.
   3. Provide interface wiring (line and low voltage) as required to complete ATC system installation.
   4. Install signal and communication cable according to Division 26.
      a. Conceal cable, except in mechanical rooms and areas where other conduit and piping are exposed.
      b. Install exposed cable in raceway.
      c. Install concealed cable in raceway.
      d. Bundle and harness multi-conductor instrument cable in place of single cables where several cables follow a common path.

e. Fasten flexible conductors, bridging cabinets and doors, along hinge side; protect against abrasion. Tie and support conductors.
f. Number-code or color-code conductors for future identification and service of control system, except local individual room control cables.
g. Install wire and cable with sufficient slack and flexible connections to allow for vibration of piping and equipment.

E. Electronic low-voltage wiring shall be #18 AWG minimum THHN and shielded if required.

F. Provide power for normally-open duct reheat coil, fintube hot water valves from a central source(s). Interlock with hot water pump(s) to de-energize valves when pump is de-energized.

3.3 INSTALLATION

A. Wall mounted thermostats and temperature sensors shall be attached to an electrical wall box attached to a wall stud, masonry wall, or to blocking. Attaching to gypsum wallboard only shall not be allowed.

B. Mounting heights of room sensors, thermostats, and other devices, which have features which occupants may adjust or set by touching, shall be installed in locations and heights conforming to U.S. Department of Justice – 2010 ADA Standards for Accessible Design.
1. Unobstructed Forward or Side Reach: Reaches, measured by distance above the finished floor or ground surface upon which the occupant shall be sitting or standing, shall be a high of 48 inches (1220 mm) maximum measured to the top of the device, and a low of 15 inches (380 mm) minimum measured to the bottom of the device.
2. Obstructed High Reach: Where a high forward reach is over an obstruction, the clear floor space shall extend beneath the element for a distance not less than the required reach depth over the obstruction. The high forward reach shall be 48 inches (1220 mm) maximum where the reach depth is 20 inches (510 mm) maximum. Where the reach depth exceeds 20 inches (510 mm), the high forward reach shall be 44 inches (1120 mm) maximum and the reach depth shall be 25 inches (635 mm) maximum.
3. Coordinate with Division 26 – Electrical to match heights for an aesthetically pleasing appearance.

C. Verify location of room temperature sensors and other exposed control sensors with Drawings and room details before installation.
1. Thermostats and temperature sensors are indicated on the Drawings for general location. Terminal heat transfer units and fans which control space temperature shall be provided with thermostatic control, whether or not a thermostat or temperature sensor has been indicated on the Drawings.
2. Locate in the general location indicated, and coordinate to group together with room light switches and other devices of similar height, to minimize disruption of open wall space.
3. Locate to not be above electrical dimmers.
4. Locate to avoid heat-generating equipment such as computers, copiers, cooking equipment, coffee makers, vending machines, and refrigerators. Where electrical outlets are indicated near sensors, verify whether equipment is intended.
5. Locate to avoid heating piping which may be concealed in partitions.
6. Locate away from windows and exterior doors.
7. Locate to avoid other false sources of heat such as strong sunlight.

D. Provide guards on room sensors and thermostats in the following locations:
   1. Public areas other than classrooms and offices, including but not limited to: Corridors, hallways, entrances, lobbies, vestibules, stairwells, toilet rooms, locker rooms, storage rooms, cafeterias, and gymnasiums.
   2. Locations vulnerable to traffic.
   3. Where indicated.

E. At each wall-mounted temperature sensor, provide wiring for setpoint dial and override pushbutton, and for communications jacks, whether or not the specified sensor has these functions. This will allow the Owner to change sensors to add these functions in the future. Provide access to the associated controller and related control panels through each communication jack.

F. Install averaging elements in ducts and plenums in crossing or zigzag pattern.

G. Install freezestats serpentined across and clipped to the downstream face of coils. Entire length of capillary tube shall be within the unit airstream.

H. Perform adjustment/relocation of freezestats as required to eliminate nuisance freezestat alarms.

I. Aquastats installed on unit heaters and at any location above 60 inches (1525 mm) above finished floor shall be installed with adjustment knobs facing downward to facilitate adjustment.

J. Outdoor air temperature sensor(s) shall be installed on the North side of the building.

K. Connect manual-reset limit controls independent of manual-control switch positions. Automatic duct heater resets may be connected in interlock circuit of power controllers.

L. Connect hand-off-auto selector switches to override automatic interlock controls when switch is in hand position.

M. Connect lead-lag controls to lock out the failed or non-selected motor, to prevent simultaneous operation.

N. Connect lead-lag controls so that only 1 motor can run in starter “hand” position.

O. Connect fire alarm shutdown of motors on the load side of controls and hand-off-auto switches, to prevent motor from running in any switch position during fire alarm.

P. For components to be installed under other Sections of the Specifications, provide delivery of components to appropriate Subcontractors, provide installation instructions, and supervise their installation.

Q. Install hydronic instrument wells, valves, and other accessories according to Division 23 Section "Hydronic Piping."
   1. Sensors shall be immersion type in wells unless otherwise specified or indicated.
   2. Enlarge piping at wells to prevent excess interference with flow.
   3. Locate wells to ensure insertion in active flowing section of piping or tank.
   4. Fill sensor wells with Honeywell thermal heat transfer paste to ensure good conduction.

R. Install refrigerant instrument wells, valves, and other accessories according to Division 23 Section "Refrigerant Piping and Specialties."

S. Install automatic dampers in conformance to Division 23 Section "Air Duct Accessories."

T. Install damper motors on outside of duct in warm areas, not in locations exposed to outdoor temperatures. Provide stand-off brackets of depth to meet or exceed specified thickness of duct insulation.

U. Install duct volume-control dampers according to Division 23 Sections specifying air ducts.

V. Provide labels and nameplates to identify control components according to Division 23 Section "Identification for HVAC Piping and Equipment."

W. Install electronic and fiber-optic cables according to Division 27.

X. Unless otherwise indicated, actuators shall be spring loaded and shall, upon a loss of power, actuate their device to an appropriate “fail safe” position.
   1. Hot water valves - fail safe to fully open.
   2. Outside and exhaust air dampers - fail safe to fully closed.
   3. Supply air dampers at rooftop units - fail safe to fully closed.
   4. Return air dampers - fail safe to fully open.

Y. For actuators that are required to “fail safe”, provide spring return actuators. “Floating point” actuators shall not be allowed for these applications. “Floating point” actuators shall be allowed for actuators that are not required to “fail safe”.

Z. Enter computer programs and data files into the related computers including control programs, initial approved parameters and settings, and English descriptors.

AA. Maintain CD copies of data file and application software for reload use in the event of a system crash or memory failure. 1 copy shall be delivered to the Owner during training session, and 1 copy shall be archived in the ATC Contractor's local software vault.

BB. Install software in control units and operator workstation(s). Implement features of programs to specified requirements and as appropriate to sequence of operation.

CC. Connect and configure equipment and software to achieve sequence of operation specified.

3.4 FIELD QUALITY CONTROL

A. Coordinate with the requirements of Division 01 Section “General Commissioning Requirements”.

B. Manufacturer's Field Service: Engage a factory-authorized service representative to inspect field-assembled components and equipment installation, including connections, and to assist in field testing. Report results in writing.

C. Perform the following field tests and inspections and prepare test reports:
   1. Operational Test: After electrical circuitry has been energized, start units to confirm proper unit operation. Remove and replace malfunctioning units and retest.
   2. Test and adjust controls and safeties.

D. DDC Verification:
   1. Verify that instruments are installed before calibration, testing, and loop or leak checks.
   2. Check instruments for proper location and accessibility.
   3. Check instrument installation for direction of flow, elevation, orientation, insertion depth, and other applicable considerations.
   4. Check flow instruments. Inspect tag number and line and bore size, and verify that inlet side is identified and that meters are installed correctly.
   5. Check pressure instruments, piping slope, installation of valve manifold, and self-contained pressure regulators.
   6. Check temperature instruments and material and length of sensing elements.
   7. Check control valves. Verify that they are in correct direction.
   8. Check DDC system as follows:
      a. Verify that DDC controller power supply is from emergency power supply, if applicable.
      b. Verify that wires at control panels are tagged with their service designation and approved tagging system.
      c. Verify that spare I/O capacity has been provided.
      d. Verify that DDC controllers are protected from power supply surges.

E. Replace damaged or malfunctioning controls and equipment and repeat testing procedures.

3.5 ADJUSTING

A. Calibrating and Adjusting:
   1. Calibrate instruments.
   2. Make 3-point calibration test for both linearity and accuracy for each analog instrument.
   3. Calibrate equipment and procedures using manufacturer's written recommendations and instruction manuals. Use test equipment with accuracy at least double that of instrument being calibrated.
   4. Control System Inputs and Outputs:
      a. Check analog inputs at 0, 50, and 100 percent of span.
      b. Check analog outputs using milliampere meter at 0, 50, and 100 percent output.
      c. Check digital inputs using jumper wire.
      d. Check digital outputs using ohmmeter to test for contact making or breaking.
      e. Check resistance temperature inputs at 0, 50, and 100 percent of span using a precision-resistant source.
   5. Flow:
      a. Set differential pressure flow transmitters for 0 and 100 percent values with 3-point calibration accomplished at 50, 90, and 100 percent of span.
      b. Manually operate flow switches to verify that they make or break contact.
   6. Pressure:
      a. Calibrate pressure transmitters at 0, 50, and 100 percent of span.
      b. Calibrate pressure switches to make or break contacts, with adjustable differential set at minimum.

7. Temperature:
   a. Calibrate resistance temperature transmitters at 0, 50, and 100 percent of span using a precision-resistance source.
   b. Calibrate temperature switches to make or break contacts.
8. Stroke and adjust control valves and dampers without positioners, following the manufacturer's recommended procedure, so that valve or damper is 100 percent open and closed.
9. Stroke and adjust control valves and dampers with positioners, following manufacturer's recommended procedure, so that valve and damper is 0, 50, and 100 percent closed.
10. Provide diagnostic and test instruments for calibration and adjustment of system.
11. Provide written description of procedures and equipment for calibrating each type of instrument. Submit procedures review and approval before initiating startup procedures.

B. Adjust initial temperature set points.

C. Occupancy Adjustments: When requested within 12 months of date of Substantial Completion, provide on-site assistance in adjusting system to suit actual occupied conditions. Provide up to 3 visits to Project during other than normal occupancy hours for this purpose.

3.6 VALIDATION

A. The ATC Contractor shall completely check out, calibrate, and test connected hardware and software to insure that the system performs in accordance with the approved submittals for specifications and sequences of operations.

B. Witnessed Validation Demonstration: Shall consist of:
   1. Display and demonstrate each type of data entry to show site specific customizing capability.
   2. Execute digital and analog commands.
   3. Demonstrate ATC loop precision and stability via trend logs of inputs and outputs.
   4. Demonstrate energy management performance via trend logs and command trace.

3.7 DEMONSTRATION

A. Engage a factory-authorized service representative to train Owner's maintenance personnel to adjust, operate, and maintain Mechanical instrumentation and controls. Refer to Division 01 Section "Demonstration and Training."

3.8 TRAINING

A. Training shall be by the ATC Subcontractor and shall utilize specified manuals and as-built documentation. Video record each training session, and turn the completed video over to the Owner when training has been completed.

B. Operator training shall include 1 four-hour session encompassing:
   1. Modifying text.
   2. Sequence of Operation review.
   3. Selection of displays and reports.
   4. Use of the specified functions.
   5. Setting and adjusting of occupancy schedules.

6. Troubleshooting of sensors.
7. Owner questions/concerns.

PART 4 - SEQUENCE OF OPERATION

4.1 GENERAL

A. Setpoints shall be adjustable by the building operator through the graphic interface on the operator's workstation desktop PC, and through a portable laptop computer plugged into the system at locations throughout the building.

B. Provide the ability for the Testing and Balancing Agent to connect to the system and change setpoints, to temporarily override setpoints, and to override modes of operation, as may be required for their work.

4.2 OCCUPIED/UNOCCUPIED MODE

A. Provide as a minimum the following zones of occupied/unoccupied control, each with its own time-of-day and calendar sequences:
   1. Classrooms including areas served by RTAC-2.

B. When occupied/unoccupied override buttons on space sensors are pressed, the mode for that space and associated toilet rooms shall change to occupied mode for 2 hours (adjustable). System shall maintain a log of where and when the buttons are pressed during unoccupied times, but shall not log if button is pressed during occupied time.

C. Zones that are served by baseboard radiation or convectors shall not require their respective air handling unit to be commanded on when their space sensor override button is depressed.

D. Zones that are served by reheat coils only shall require their respective air handling unit to be commanded on as described in the air handling unit sequence of operations when their space sensor override button is depressed.

E. Operator Station Display: At a minimum, indicate the following on operator workstation display terminal:
   1. Identification of room where button was pressed.
   2. Identification of systems in override status.
   3. Override time remaining.

4.3 PACKAGED ROOFTOP HVAC UNIT - RTAC-2

A. Wire to RTAC unit's conventional thermostat interface. Command unit on and off based on time of day schedule. When unit is on, the supply fan shall run continuously and the two position motorized damper in the supply duct main shall fully open. When unit is off, the supply fan shall be off, the RTAC unit's outside air damper shall be fully closed and the 2 position motorized damper in the supply duct main shall fully close.

B. When there is no call for cooling, RTAC unit dampers shall be in minimum outside air position and reheat coils shall be energized as required to maintain zone temperatures.

C. On a call for cooling from any zone temperature sensor, the ATC system energizes stage 1 of cooling and the RTAC unit's factory installed controls determine whether or not economizer cooling (based on differential enthalpy) can be utilized. If the unit determines that conditions are favorable for economizer cooling, the outside air damper shall modulate open to maintain a discharge air temperature of 55°F. If conditions are not favorable for economizer cooling, the outside air damper is placed in minimum outside air position and the first stage of mechanical cooling is energized.

D. If mechanical cooling is energized and the discharge air temperature drops below 48°F (adjustable), the ATC system shall de-energize stages of cooling until discharge air temperature rises above 60°F (adjustable).

E. If mechanical cooling is energized and the discharge air temperature rises above 60°F (adjustable), additional stages of cooling shall be energized by the ATC system.

F. When the outside air temperature is below 50°F (adjustable), the ATC system shall lock out stages of cooling except for stage 1. Stage 1 of cooling shall not be locked out so that economizer cooling will be available at all times.

G. When the RTAC unit is off during unoccupied mode and when the space temperature in any zone that is not served by baseboard/radiant ceiling radiation drops below 60°F (Owner adjustable), the RTAC unit shall be commanded on in full recirculation air mode by the ATC system until all zones are satisfied. The ATC Contractor shall provide relay(s) as required to keep the outside air damper closed in this mode of operation.

H. When any temperature sensor override button is depressed during the unoccupied mode, the RTAC unit shall be overridden to its daytime mode of operation. The override shall initially be set to last for 2 hours but shall be adjustable.

I. Shut Down Mode: Shut down mode shall command the RTAC unit off and shall fully close the two position damper in the supply duct main.

J. An automatic reset freeze protection thermostat with capillary tube shall be located in the supply duct main inside of the building. The freeze protection thermostat shall, upon sensing a temperature equal to or below setpoint (40°F - Owner adjustable), command the RTAC unit off and energize an environmental alarm. After the freezestat's temperature rises above 45°F (Owner adjustable), the freezestat shall be automatically reset and the RTAC unit shall automatically return to normal heating mode of operation. If the RTAC unit experiences more than three freezestat alarms in any one 90 minute period of time, the automatic freezestat reset function shall be disabled and the system shall remain in a shut down freezestat alarm mode until manually reset by the operator. A manual reset button shall be provided at the ATC control panel to facilitate re-setting of the freezestat at the control panel.

K. Safeties:

1. A manual reset type freeze protection thermostat with capillary tube shall be located in the supply duct main inside of the building, with the automatic reset freeze protection thermostat. The manual reset freeze protection thermostat shall, upon sensing a temperature equal to or below set point (35°F - Owner-adjustable), command the RTAC unit off, close the 2 position outside air damper in the supply duct main and energize an environmental alarm.

2. Air flow switches are installed in the unit for the supply fan. The ATC system uses the switches to confirm the fan is in the desired state (i.e. on or off) and generates an environmental alarm if status deviates from ATC start/stop control.
3. Discharge high limit static pressure sensor (set at 1 inch wc static pressure higher than scheduled external static pressure), located upstream of the main supply duct motorized damper, shall command the RTAC unit off upon activation and shall activate an alarm.

4.4 DUCT-MOUNTED REHEAT COILS

A. Space Sensor: Wall-mounted, with setpoint selector and occupied/unoccupied override button.

B. The space served by the reheat coil is controlled in Occupied and Unoccupied modes as follows:
1. The control valve modulates to maintain room setpoint (72°F occupied locker and toilet rooms/68°F occupied offices and production areas/60°F unoccupied, adjustable).
2. In the unoccupied mode, if any room served by only a reheat coil calls for heating, the associated air handler or unit ventilator is energized in heating-only mode.

C. Operator Station Display: At a minimum, indicate the following on operator workstation display terminal:
1. Coil valve position command.
2. Space temperature set point.
3. Space temperature.
4. Occupied/unoccupied status.
5. Manual override of occupied status, and remaining override time.

END OF SECTION 230900

SECTION 237413 – PACKAGED, OUTDOOR, CENTRAL-STATION AIR-HANDLING UNITS

PART 1 - GENERAL

1.1 SECTION INCLUDES

A. Packaged rooftop air handling units.

B. Roof mounting curb and base.

C. Maintenance service.

1.2 SUBMITTALS

A. Division 01 Section “Submittal Procedures.”

B. Shop Drawings: Indicate capacity and dimensions of manufactured products and assemblies required for this project. Indicate electrical service with electrical characteristics and connection requirements, and duct connections.

C. Product Data: Provide capacity and dimensions of manufactured products and assemblies required for this project. Indicate electrical service with electrical characteristics and connection requirements, and duct connections.

D. Operation and Maintenance Data: Include manufacturer's descriptive literature, operating instructions, installation instructions, maintenance and repair data, and parts listing. Submit in accordance with Division 01 Section “Operation and Maintenance Data.”

1.3 QUALITY ASSURANCE

A. Manufacturer: Company specializing in manufacturing the Products specified in this Section with minimum 3 years’ experience.

1.4 REGULATORY REQUIREMENTS

A. Products Requiring Electrical Connection: Listed and classified by Underwriters' Laboratories, Inc., as suitable for the purpose specified and indicated.

B. Unit shall conform to UL 1995/CSA 22.2 #236 for construction of packaged air conditioner and shall have UL/CSA label affixed to rooftop package.
   1. In the event the unit is not UL/CSA approved, the manufacturer shall, at his expense, provide for a field inspection by a UL/CSA representative to verify conformance to UL/CSA standards. If necessary, contractor shall perform required modifications to the unit to comply with UL/CSA, as directed by the UL/CSA representative, at no additional expense to the Owner.

C. Gas-fired heating rooftop units shall conform to ANSI Z21.47/Canadian Standards Association (CAN/CSA-2.3) for construction of packaged air conditioner.
   1. In the event the unit is not CSA approved, the manufacturer must, at his expense, provide for a field inspection by a CSA representative to verify conformance to CSA standards. If necessary, contractor shall perform modifications to the unit to comply

with CSA, as directed by the CSA representative, at no additional expense to the Owner.

1.5 DELIVERY, STORAGE, AND PROTECTION

A. Division 01 Section “Product Requirements”: Transport, handle, store, and protect products.

B. Protect units from physical damage by storing off site until roof mounting curbs are in place, ready for immediate installation of units.

1.6 WARRANTY

A. Provide a full parts warranty for 1 year from substantial completion.

B. Provide 5 year extended warranty for compressors including materials only.

C. Provide 5 year limited warranty for heat exchanger including materials only.

1.7 MAINTENANCE SERVICE

A. Division 01 Section “Closeout Procedures.”

B. Furnish service and maintenance of packaged roof top units for 1 year from Date of Substantial Completion.

C. Provide maintenance service with a 2 month interval as maximum time period between calls. Provide 24-hour emergency service on breakdowns and malfunctions.

1.8 EXTRA MATERIALS

A. Division 01 Section “Closeout Procedures.”

B. Provide 1 set of filters.

PART 2 - PRODUCTS

2.1 MANUFACTURERS

A. Lennox – Basis of design.

B. Daikin Applied (formerly McQuay).

C. Trane.

D. York.

E. No substitutions.

2.2 PACKAGED ROOFTOP UNITS

A. Air Conditioning Units:
   1. General: Roof mounted units having gas burner and electric refrigeration.
   2. Description: Self-contained, packaged, factory assembled and prewired, consisting of cabinet and frame, supply fan, heat exchanger and burner, controls, air filters, refrigerant cooling coil and compressor, condenser coil and condenser fan.
   3. Disconnect Switch: Factory mount disconnect switch.

B. Fabrication:
   1. Cabinet: Galvanized steel with baked enamel finish, access doors or removable access panels with quick fasteners, locking door handle type with piano hinges. Structural members shall be minimum 18 gauge (1.20 mm), with access doors or removable panels of minimum 20 gauge (0.90 mm).
   2. Insulation: 1 inch (25 mm) thick neoprene coated glass fiber with edges protected from erosion.

C. Supply Fan: Forward curved centrifugal type, resiliently mounted with V-belt drive, adjustable variable pitch motor pulley, and rubber isolated hinge mounted high efficiency motor. Isolate complete fan assembly.

D. Refrigeration System:
   1. Compressors: Provide hermetic scroll compressors, 3600 rpm maximum, resiliently mounted with positive lubrication, crankcase heater, high and low pressure safety controls, motor overload protection, suction and discharge service valves and gauge ports, and filter drier.
   2. 5-minute timed off circuit to delay compressor start.

E. Condenser Coil:
   1. Provide copper tube, epoxy coated {corrosion protection} aluminum fin coil assembly.
   2. Provide direct drive propeller fans, resiliently mounted with fan guard, motor overload protection, wired to operate with compressor.

F. Evaporator Coil:
   1. Provide copper tube, epoxy coated {corrosion protection} aluminum fin coil assembly with galvanized drain pan and connection.
   2. Provide capillary tubes or thermostatic expansion valves for units of 6 tons (21 kw) capacity and less, and thermostatic expansion valves and alternate row circuiting for units 7.5 tons (26 kw) cooling capacity and larger.

G. Gas Heating:
   1. Heat Exchangers: Aluminized steel, of welded construction.
   2. Burner:
      a. Gas Burner: Induced draft type burner with adjustable combustion air supply, pressure regulator, gas valves, manual shut-off, intermittent spark or glow coil ignition, flame sensing device, and automatic 100 percent shut-off pilot.
      b. Gas Burner Safety Controls: Energize ignition, limit time for establishment of flame, prevent opening of gas valve until pilot flame is proven, stop gas flow on ignition failure, energize blower motor, and after air flow proven and slight delay, allow gas valve to open.

c. High Limit Control: Temperature sensor with fixed stop at maximum permissible setting, de-energize burner on excessive bonnet temperature and energize burner when temperature drops to lower safe value.

d. Supply Fan Control: Temperature sensor sensing bonnet temperatures and independent of burner controls, with provisions for continuous fan operation.

H. Mixed Air Casing: With dampers and air filter rack.

1. Air Filter Rack: Steel or aluminum filter tracks, metal holding frame for each filter, and corrugated metal filler panels to prevent air bypassing filters. Filter access doors shall have compressible gasketing or elastomeric foam insulation to seal tight against the ends of the filters.

2. Dampers: Provide outside, return, and relief dampers with damper operator and control package to automatically vary outside air quantity. Outside air damper shall have spring return to fail to closed position. Relief dampers may be gravity balanced.

a. Gaskets: Provide tight fitting dampers with edge gaskets, maximum leakage 5 percent at 2 inches (500 Pa) pressure differential.

3. Damper Operator: 24 volt with gear train sealed in oil with spring return on units 7.5 ton (26 kw) cooling capacity and larger.

4. Mixed Air Controls: Maintain selected supply air temperature and return dampers to minimum position on call for heating and when ambient air enthalpy exceeds return air enthalpy.

I. Air Filters: 2 inch (50 mm) thick MERV 8 disposable pleated-media extended-area panel filters in metal holding frames.

J. Roof Mounting Curb: 14 inches high galvanized steel, channel frame with gaskets, nailer strips.

K. Operating Controls:

a. Provide terminal strip on unit for connection of operating controls to remote panel. Control shall provide remote control of stages of heating and cooling.

b. Provide remote mounted fan control switch (on-auto).

c. Provide low limit thermostat in supply air to close outside air damper and stop supply fan.

d. Provide night control energized by central time clock to maintain night thermostat setting, lock out refrigeration, close outside air damper and open return air damper, stop supply air fan, for night and unoccupied operation. Provide time delay to maintain outside air damper closed and return air damper open after switching to day and occupied operation.

PART 3 - EXECUTION

3.1 EXAMINATION

A. Division 01 Section “Project Management and Coordination”: Verification of existing conditions prior to beginning work.

B. Verify that roof is ready to receive work, and opening dimensions are as indicated on Submittals.

C. Verify that proper power supply is available.

3.2 INSTALLATION

A. Install in accordance with manufacturer's instructions.

B. Install in accordance with NFPA 90A.

C. Mount units on factory built roof mounting curb providing watertight enclosure to protect ductwork and utility services. Install roof mounting curb level.

D. Bolt units in place with galvanized steel hex-head bolts and washers at each factory mounting hole, with fasteners' diameter as large as the factory holes allow. Protect dissimilar metals from contact.

E. Electrical connections shall be flexible in accordance with Division 23 Section "Vibration and Seismic Controls for HVAC Piping and Equipment" and Division 26 – Electrical.

3.3 MANUFACTURER'S FIELD SERVICES

A. Prepare and start systems under provisions of Division 01 Section "Quality Requirements."

B. Provide initial start-up and shut-down during first year of operation, including routine servicing and check-out.

C. Manufacturer shall furnish a factory trained service engineer without additional charge to start the unit and to coordinate interface with building's ATC system (coordinate with Division 23 Section "Instrumentation and Controls for Mechanical Systems"). Packaged rooftop unitary manufacturers shall maintain service capabilities no more than 100 miles (161 km) from the jobsite.

END OF SECTION 237413

This Page Left Intentionally Blank

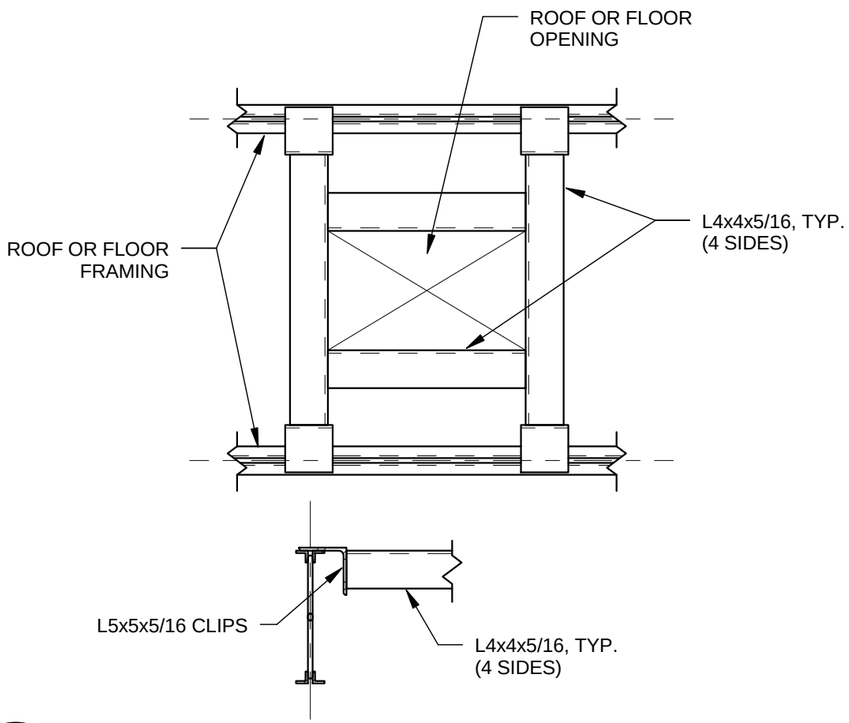

4 TYP. FRAME AT ROOF OR FLOOR OPENING

SCALE: 3/4" = 1'-0"

CONCRETE MASONRY LINTEL SCHEDULE		
MASONRY OPENING	SIZE	BEARING
4'-10" OR LESS	L4x3 1/2x5/16 (LLV)	8" MIN. ON SGMU
4'-10" TO 7'-0"	L5x3 1/2x5/16 (LLV)	8" MIN. ON SGMU
7'-0" TO 9'-0"	L6x3 1/2x3/8 (LLV)	8" MIN. ON SGMU

NOTES:

1. ONE ANGLE REQUIRED FOR EVERY 4" OF MASONRY.
2. MULTIPLE ANGLES SHALL BE WELDED BACK TO BACK.
3. "SGMU" INDICATES SOLID GROUTED MASONRY UNIT.

3 TYP. STEEL LINTEL SCHEDULE

SCALE: 3/4" = 1'-0"

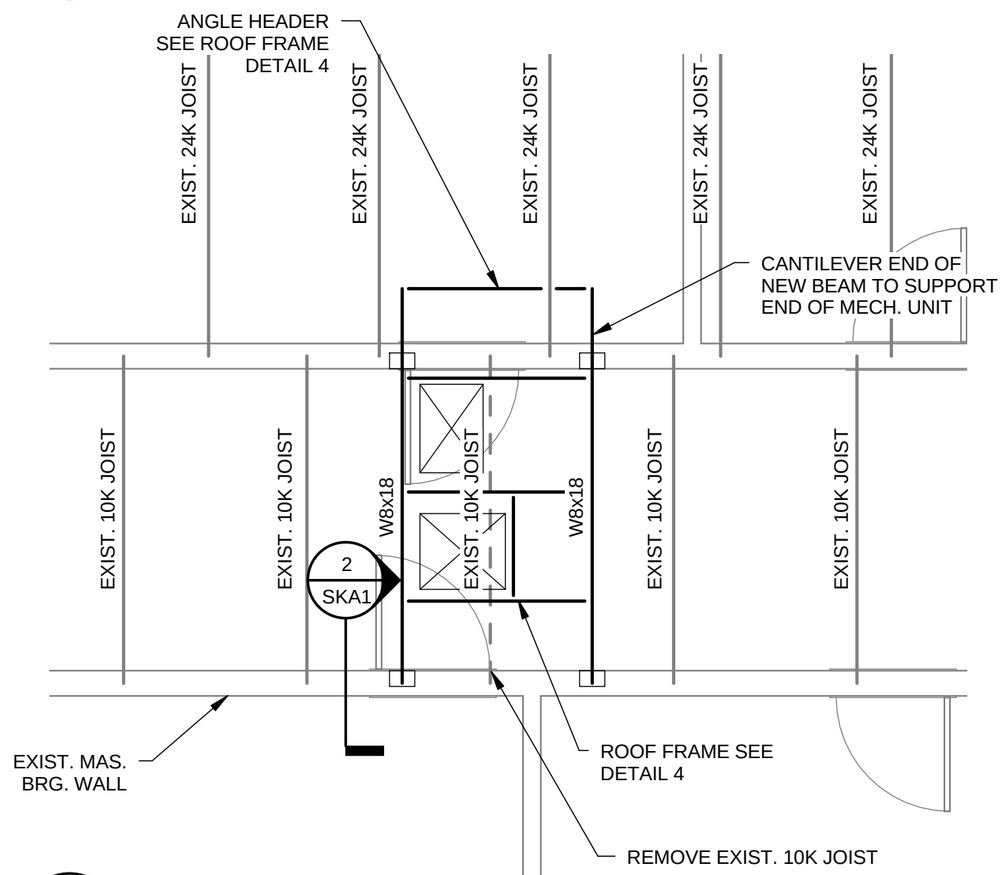

1 PARTIAL ROOF FRAMING PLAN

SCALE: 1/4" = 1'-0"

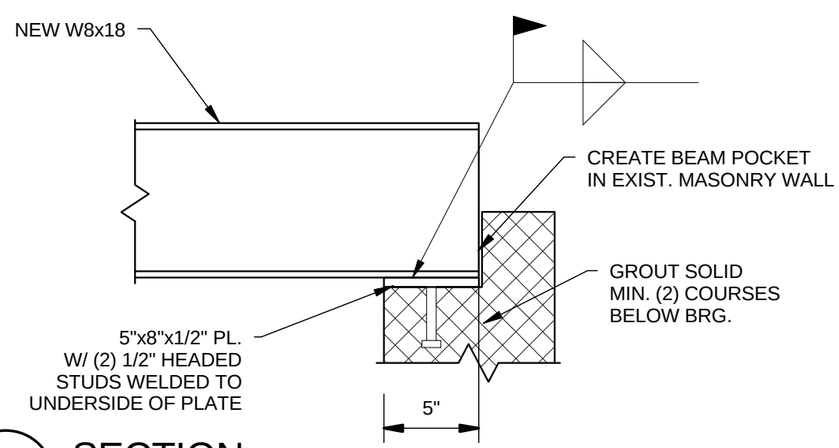

2 SECTION

SCALE: 1 1/2" = 1'-0"

HARRIMAN

Auburn, ME
207.784.5100

Portland, ME
207.775.0053

Manchester, NH
603.626.1242

SMCC HILDRETH
LAB RENOVATION
ROOM 208

PORTLAND, ME

HA Project No.	14548

NOTES:

1. ALL STEEL BEAMS TO BE ASTM A992 (Fy=50KSI).
2. ALL STEEL ANGLES AND PLATES TO BE ASTM A36.
3. ALL ROOF DECK AREAS TO BE PATCHED USING 1 1/2" 22 GA. TYPE B ROOF DECK.
4. G.C. TO VERIFY ALL DIMENSIONS & CONDITIONS IN THE FIELD.

Date	5/04/15
Scale	As indicated

© 2015 Harriman Associates

MECHANICAL UNIT SUPPORT FRAMING

SKA1