MAINE STATE BUILDING REPAIRS

MASSACHUSETTS EASTERN STATES "BIG E"

WEST SPRINGFIELD, MASSACHUSETTS

LIST OF DRAWINGS

SHEET NO	SEQUENCE	DRAWING TITLE
G-001	1 OF 14	COVER SHEET
AD101	2 OF 14	REMOVALS FIRST & SECOND FLOOR PLANS
AD201	3 OF 14	REMOVALS EXTERIOR ELEVATIONS
AD620	4 OF 14	WINDOW REMOVALS DETAILS (BID OPTION 1)
AE101	5 OF 14	FIRST & SECOND FLOOR PLANS
AE201	6 OF 14	EXTERIOR ELEVATIONS
AE202	7 OF 14	EXTERIOR ELEVATIONS AND BUILDING SECTION
AE401	8 OF 14	INTERIOR ELEVATIONS AND MISC DETAILS
AE620	9 OF 14	WINDOW DETAILS AND WINDOW TYPES, DOOR ELEVATIONS
AE701	10 OF 14	REFLECTED CEILING, ROOF PLANS AND DETAILS
MEP001	11 OF 14	MECHANICAL AND PLUMBING LEGENDS AND GENERAL REQUIREMENTS
MEP002	12 OF 14	ELECTRICAL LEGENDS AND GENERAL REQUIREMENTS
MEP101	13 OF 14	WATER AND ELECTRICAL PLAN
MEP102	14 OF 14	SANITARY MECHANICAL AND ELECTRICAL PLAN

ABBREVIATIONS

@	AT	FDN	FOUNDATION
&	AND	FIXT	FIXTURE
#	NUMBER	GALV	GALVANIZED
±	PLUS OR MINUS	GYP BD	GYPSUM BOARD
ADJ	ADJACENT	INSUL	INSULATION
ADA	AMERICANS WITH DISABILITIES ACT	MAX	MAXIMUM
		MECH	MECHANICAL
AHJ	AUTHORITY HAVING JURISDICTION	MFR'S	MANUFACTURER'S
		MIN	MINIMUM
BLDG	BUILDING	MTL	METAL
CLG	CEILING	OC	ON CENTER
COL	COLUMN	PNT	PAINT
CONC	CONCRETE	PLYWD	PLYWOOD
CONT	CONTINUOUS	PT	PRESSURE TREATED
COORD	COORDINATE	REINF	REINFORCED
CPT	CARPET	RM	ROOM
DIA	DIAMETER	SIM	SIMILAR
DN	DOWN	STL	STEEL
DWG	DRAWING	STRUCT	STRUCTURAL
ELEC	ELECTRICAL	TYP	TYPICAL
ELEV	ELEVATION	W/	WITH
EXIST	EXISTING	WD	WOOD
EXT	EXTERIOR		

LEGEND

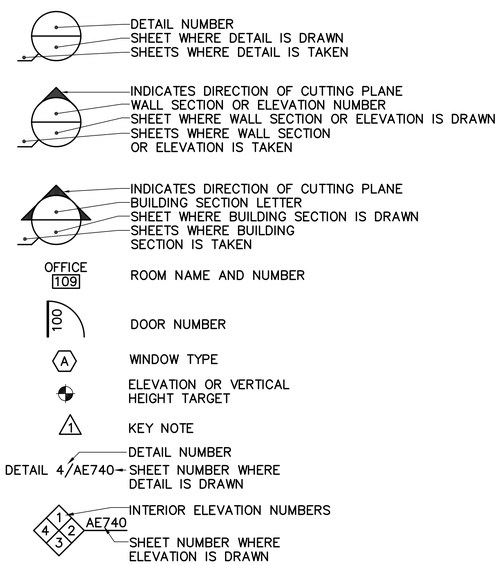

GENERAL NOTES

1. ALL WORK INCLUDED IN THIS CONTRACT SHALL CONFORM TO ALL STATE, NATIONAL AND OTHER CODES AND ORDINANCES WHICH APPLY TO THIS PROJECT INCLUDING IEBC 2009 AND NFPA 101, 2009.
2. THE CONTRACTOR SHALL FIELD VERIFY ALL EXISTING CONDITIONS AND DIMENSIONS AND REPORT ANY DISCREPANCIES TO THE ARCHITECT AND OWNER'S REPRESENTATIVE. THE CONTRACTOR SHALL PROCEED WITH THE WORK ONLY AFTER THE DISCREPANCIES HAVE BEEN RESOLVED BY THE ARCHITECT AND OWNER'S REPRESENTATIVE.
3. WORK FROM GIVEN DIMENSIONS AND LARGE SCALE DETAILS ONLY. DO NOT SCALE DRAWINGS.
4. AT THE END OF EACH WORKING DAY, THE CONSTRUCTION SITE SHALL BE LEFT IN A SAFE, SECURE, NEAT AND CLEAN MANNER.
5. THE CONTRACTOR SHALL BE RESPONSIBLE FOR OBTAINING ALL PERMITS WHICH ARE REQUIRED FOR THE SATISFACTORY COMPLETION OF THE WORK. REQUIRED PERMITS INCLUDE, BUT ARE NOT NECESSARILY LIMITED TO:
   1. DIG SAFE.
   2. TOWN OF SPRINGFIELD BUILDING DEPARTMENT.
6. ALL DIMENSIONS ARE FROM FACE OF STUD OR FROM FACE OF CONCRETE FOUNDATION WALL UNLESS NOTED OTHERWISE.
7. THE CONTRACTOR SHALL COORDINATE THE TIMING AND SEQUENCE OF WORK WITH THE OWNER AND APPROPRIATE AUTHORITIES.
8. DISRUPTIVE WORK: ALL DISRUPTIVE/NOISY WORK SHALL BE PERFORMED AS DIRECTED BY OWNER'S REPRESENTATIVE.
9. THE CONTRACTOR SHALL COORDINATE FINAL EQUIPMENT INSTALLATION LOCATIONS WITH THE ARCHITECT AND OWNER. PRIOR TO STARTING WORK.
10. SCHEDULING OF APPROVALS AND INSPECTIONS BY AUTHORITIES HAVING JURISDICTION (A.H.J.) OVER THE WORK IS THE RESPONSIBILITY OF THE CONTRACTOR.
11. THE CONTRACTOR SHALL REPAIR AND SEAL ANY NEW PENETRATIONS THROUGH EXISTING WALLS AND ROOF TO MAINTAIN WATERTIGHT INSTALLATION.

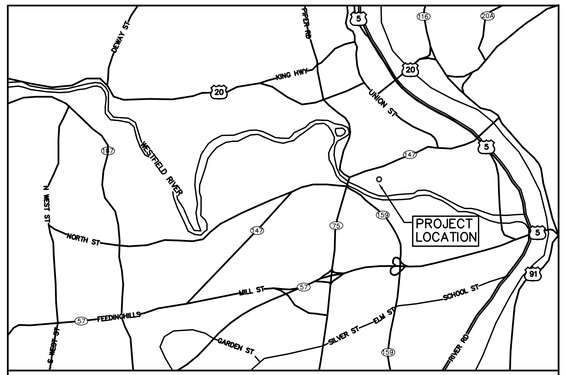

VICINITY MAP
NOT TO SCALE

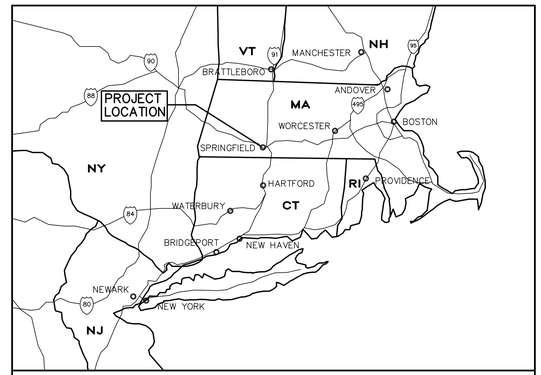

AREA MAP
NOT TO SCALE

22 May, 2015 – 11:37am
Y:\21501.01\21501.01-G001.dwg

OAK POINT ASSOCIATES
ARCHITECTURE ■ ENGINEERING ■ PLANNING
231 Main Street, Biddeford, Maine 04005 (T) 207.283.0193 (F) 207.283.4283
www.oakpoint.com

DESIGNED BY: WVB
DRAWN BY: DEM
CHECKED BY: WCB

PROJECT: 21501.01

THE STATE OF MAINE BUILDING
AT THE EASTERN STATES EXPOSITION
1305 MEMORIAL DRIVE
WEST SPRINGFIELD,
MASSACHUSETTS

MAINE STATE BUILDING REPAIRS
MASSACHUSETTS EASTERN
STATES "BIG E"

COVER SHEET

SCALE: AS NOTED

DATE: 05-26-15

DWG.: G-001

SHEET: 1 OF 14

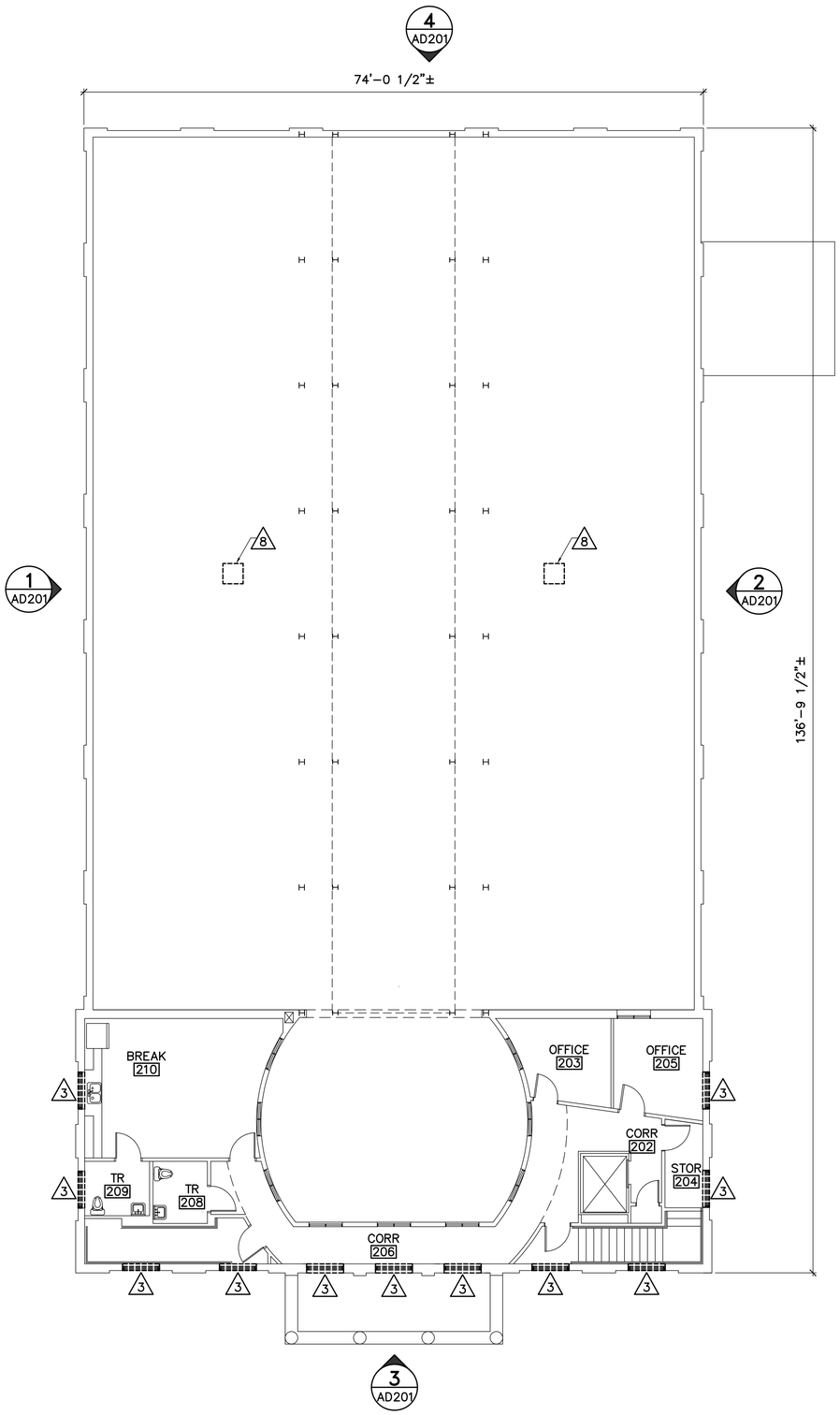

1 REMOVALS SECOND FLOOR PLAN
AD101 SCALE: 1/8"=1'-0"

PLAN NORTH

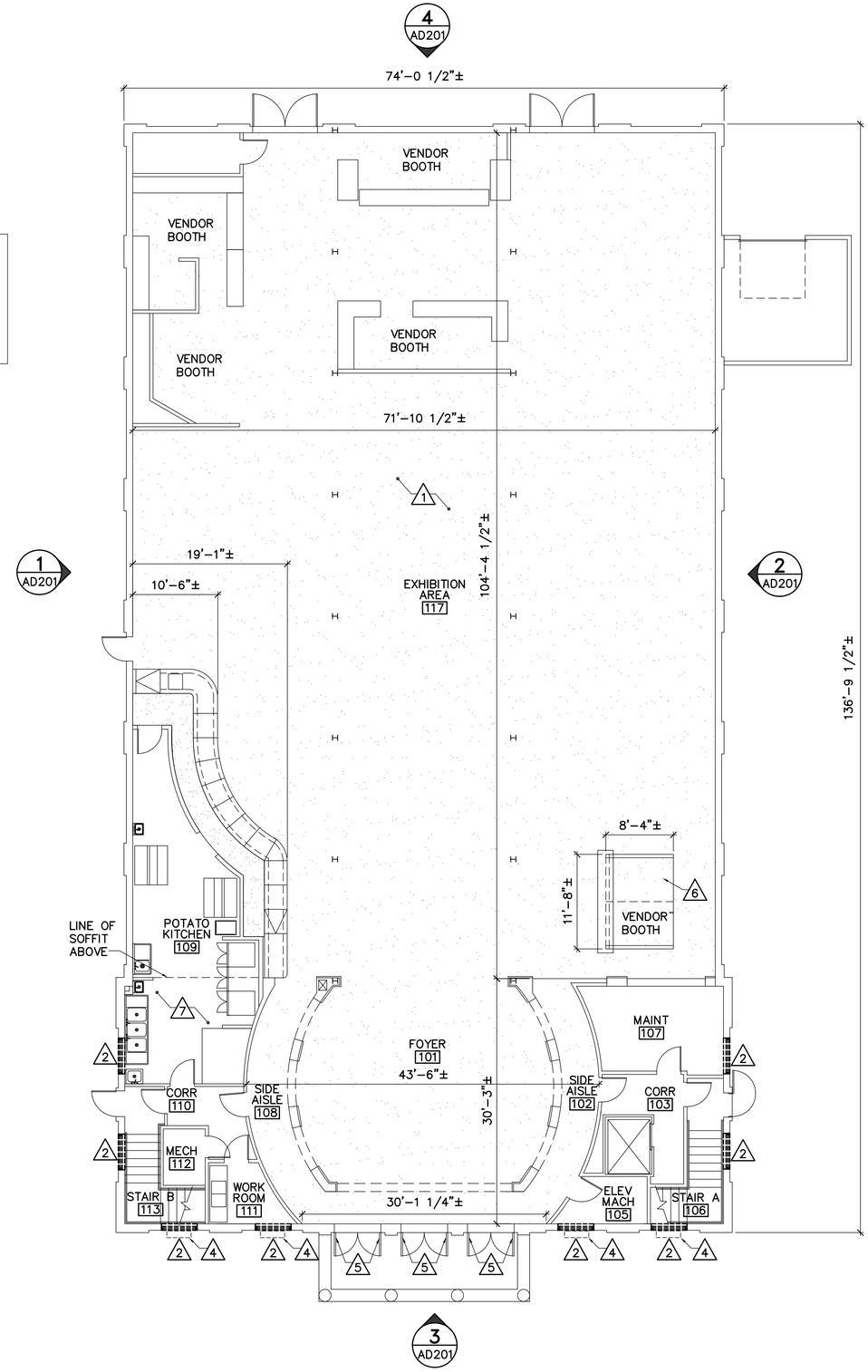

2 REMOVALS FIRST FLOOR PLAN
AD101 SCALE: 1/8"=1'-0"

PLAN NORTH

GENERAL SHEET NOTES:

1. ALL ITEMS ON THIS SHEET ARE EXISTING UNLESS NOTED OTHERWISE.
2. VENDOR BOOTHS WILL REMAIN IN PLACE AS SHOWN. RENOVATION WORK IS TO BE COMPLETED AROUND WALLS AND COUNTERS AS SHOWN.

REMOVALS KEYNOTES: (THIS SHEET ONLY)

1. REMOVE PAINTED FLOOR FINISH FROM CONCRETE SLAB. PREPARE FOR FINISH AS SCHEDULE.
2. REMOVE 4'-0"± x 7'-2"± WINDOW AND PREPARE OPENING FOR REPLACEMENT WINDOW. (BID OPTION 1).
3. REMOVE 4'-0"± x 4'-11"± WINDOW AND PREPARE OPENING FOR REPLACEMENT WINDOW. (BID OPTION 1)
4. REMOVE WOOD PLANTER BOX AND STORE FOR REINSTALLATION. (BID OPTION 1)
5. REMOVE DOOR HARDWARE INCLUDING DOOR PULLS AND PLATES, CLOSURES DOOR SWEEPS, LOCK CYLINDER, UPPER BOLT WITH CHAIN PULL. (BID OPTION 2)
6. RELOCATE VENDOR BOOTH AS REQUIRED FOR FLOOR FINISH ACTIVITIES. REPLACE TO ORIGINAL LOCATION AFTER COMPLETION OF FLOOR FINISH ACTIVITIES.
7. REMOVE SUSPENDED CEILING AS REQUIRED FOR PLUMBING WORK. COORDINATE WITH PLUMBING DRAWINGS. (BID OPTION 4)
8. PROVIDE ROOF OPENING FOR EXHAUST FAN. SEE DETAIL 3/AE701. (BID OPTION 5)

LEGEND:

FLOOR FINISH REMOVAL.

GRAPHIC SCALE
8' 4' 0 8' 16'
1/8"=1'-0"
CHECK GRAPHIC SCALE BEFORE USING

22 May, 2015 – 11:42am
Y:\21501.01\21501.01-AD101.dwg

OAK POINT ASSOCIATES
ARCHITECTURE ■ ENGINEERING ■ PLANNING
231 Main Street, Biddeford, Maine 04005 (T) 207.283.0193 (F) 207.283.4283
www.oakpointai.com

DESIGNED BY: WVB
DRAWN BY: DEM
CHECKED BY: JMc
PROJECT: 21501.01

THE STATE OF MAINE BUILDING
AT THE EASTERN STATES EXPOSITION
1305 MEMORIAL DRIVE
WEST SPRINGFIELD,
MASSACHUSETTS

MAINE STATE BUILDING REPAIRS
MASSACHUSETTS EASTERN
STATES "BIG E"

REMOVALS
FIRST & SECOND
FLOOR PLANS

SCALE: AS NOTED
DATE: 05-26-15
DWG.: AD101
SHEET: 2 OF 14

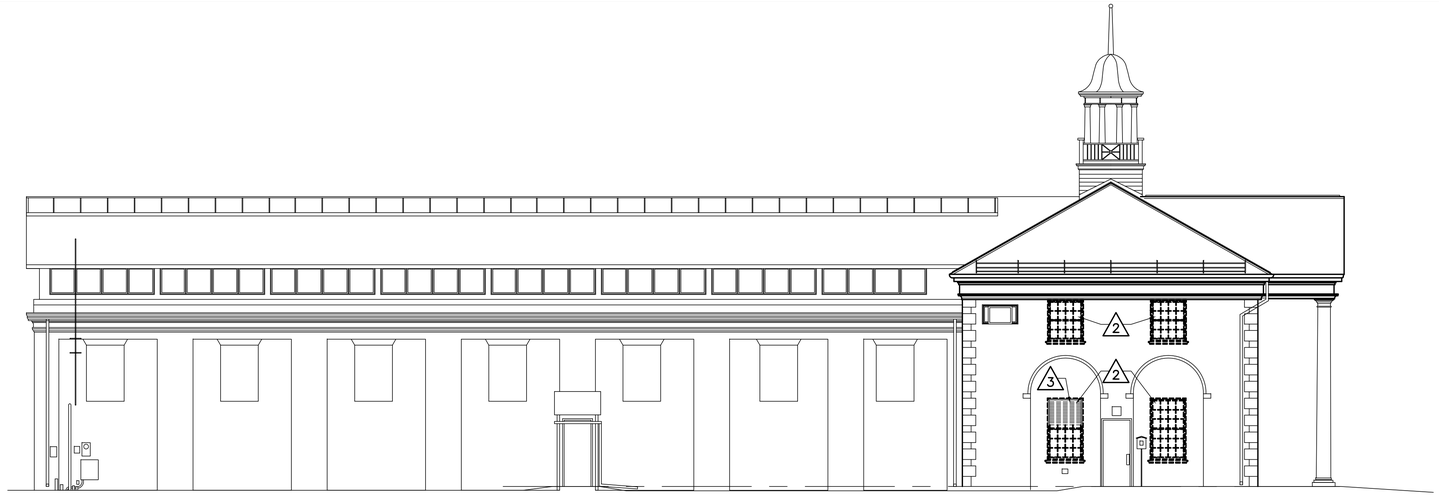

1 EAST ELEVATION
AD201 SCALE: 1/8"=1'-0"

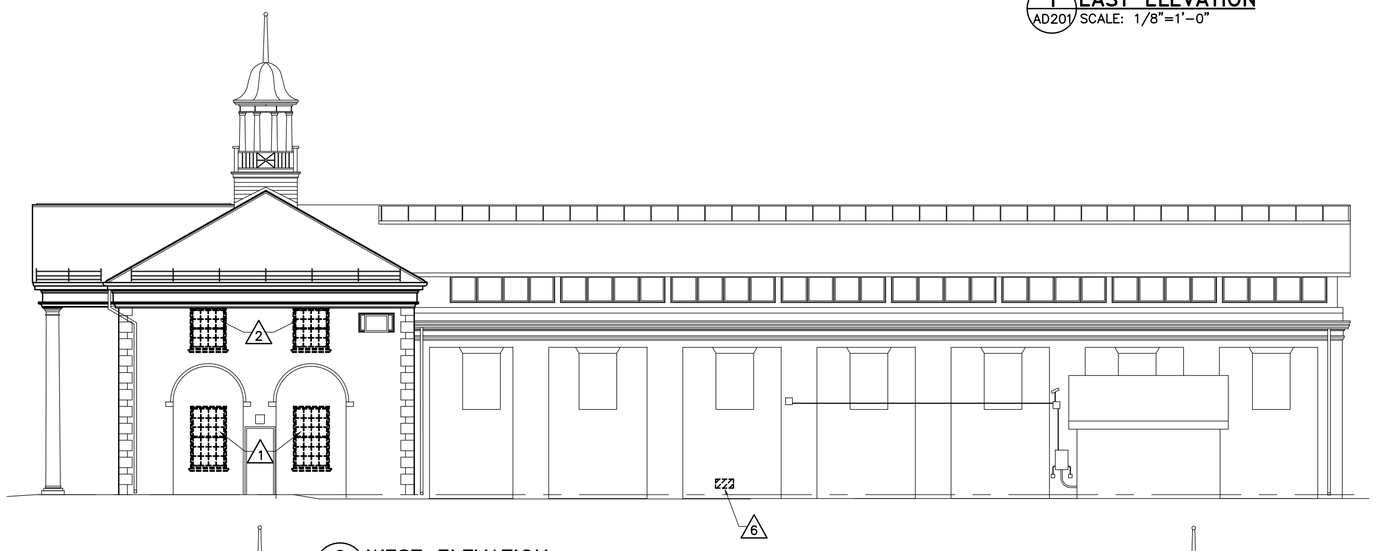

2 WEST ELEVATION
AD201 SCALE: 1/8"=1'-0"

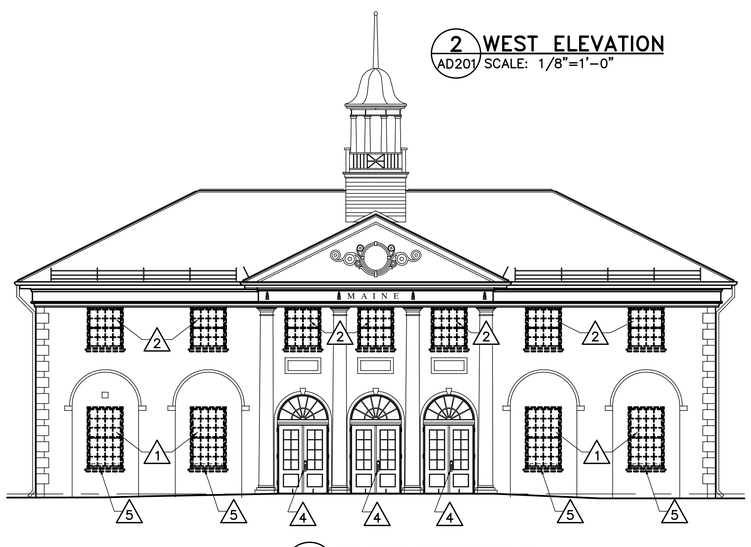

3 NORTH ELEVATION
AD201 SCALE: 1/8"=1'-0"

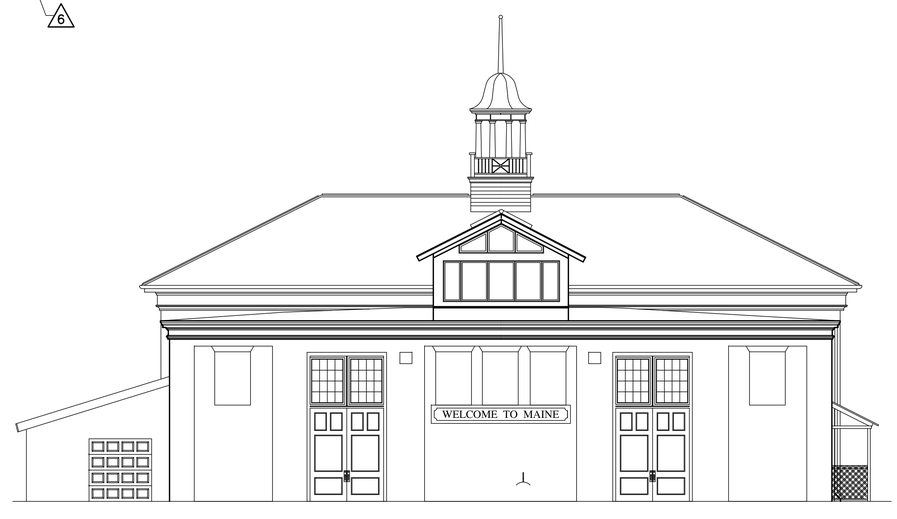

4 SOUTH ELEVATON
AD201 SCALE: 1/8"=1'-0"

GENERAL SHEET NOTES:

1. ALL ITEMS ON THIS SHEET ARE EXISTING UNLESS NOTED OTHERWISE.

REMOVALS KEYNOTES: (THIS SHEET ONLY)

1. REMOVE 4'-0"± x 7'-2"± WOOD WINDOW. (BID OPTION 1)
2. REMOVE 4'-0"± x 4'-11"± WOOD WINDOW. (BID OPTION 1)
3. REMOVE LOUVER GRILLE OVER UPPER SASH AND STORE FOR REINSTALLATION. (BID OPTION 1)
4. REMOVE DOOR HARDWARE INCLUDING DOOR PULLS AND PLATES, CLOSURES DOOR SWEEPS, LOCK CYLINDER, UPPER BOLT WITH CHAIN PULL. (BID OPTION 2)
5. REMOVE WOOD PLANTER BOX AND STORE FOR REINSTALLATION. (BID OPTION 1)
6. PROVIDE WALL PENETRATION OPENING FOR PLUMBING WORK. REFER TO MEP101. (BID OPTION 4)

GRAPHIC SCALE
1/8"=1'-0" 8' 4' 0 8' 16'
CHECK GRAPHIC SCALE BEFORE USING

22 May, 2015 - 11:42am
Y:\21501.01\21501.01-AD201.dwg

OAK POINT ASSOCIATES
ARCHITECTURE ■ ENGINEERING ■ PLANNING
231 Main Street, Biddeford, Maine 04005 (T) 207.283.0193, (F) 207.283.4283
www.oakpoint.com

DESIGNED BY: WVB
DRAWN BY: DEM
CHECKED BY: JMc
PROJECT: 21501.01

THE STATE OF MAINE BUILDING
AT THE EASTERN STATES EXPOSITION
1305 MEMORIAL DRIVE
WEST SPRINGFIELD,
MASSACHUSETTS

MAINE STATE BUILDING REPAIRS
MASSACHUSETTS EASTERN
STATES "BIG E"

REMOVALS
EXTERIOR
ELEVATIONS

SCALE: AS NOTED
DATE: 05-26-15
DWG.: AD201
SHEET: 3 OF 14

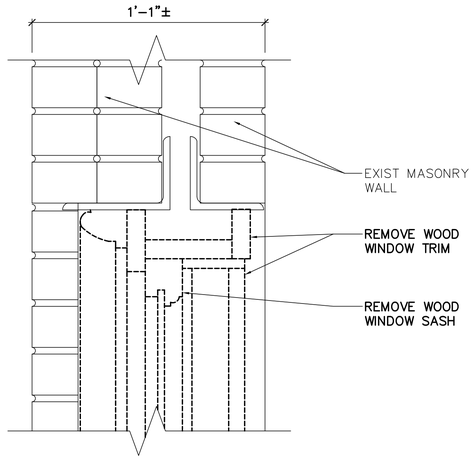

1 AD620 **WINDOW HEAD REMOVAL DETAIL**
SCALE: 3"=1'-0"

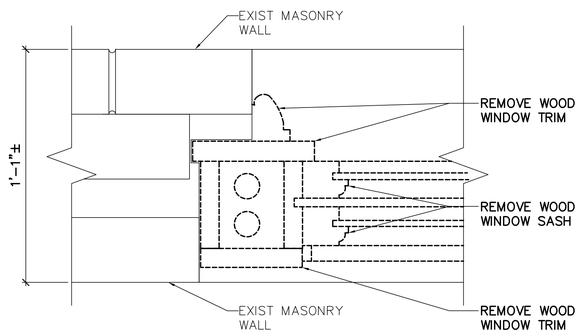

2 AD620 **WINDOW JAMB REMOVAL DETAIL**
SCALE: 3"=1'-0"

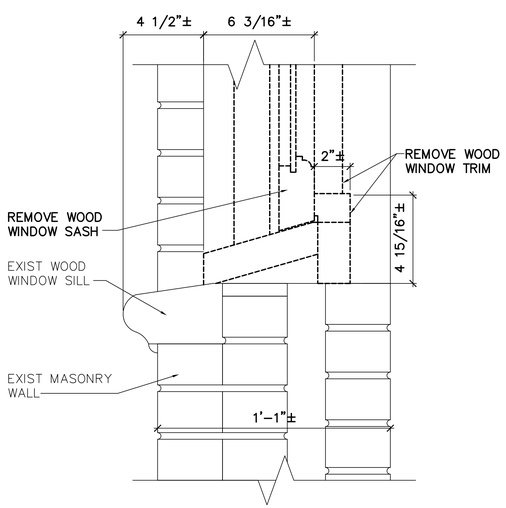

3 AD620 **WINDOW SILL REMOVAL DETAIL**
SCALE: 3"=1'-0"

GRAPHIC SCALE
3"=1'-0"
6" 4" 2" 0 6"
CHECK GRAPHIC SCALE BEFORE USING

22 May, 2015 – 11:41am
Y:\21501.01\21501.01-AD620.dwg

OAK POINT ASSOCIATES
ARCHITECTURE ■ ENGINEERING ■ PLANNING
231 Main Street, Biddeford, Maine 04005 (T) 207.283.0193 (F) 207.283.4283
www.oakpoint.com

DESIGNED BY: WVB
DRAWN BY: DEM
CHECKED BY: JMc
PROJECT: 21501.01

THE STATE OF MAINE BUILDING AT THE EASTERN STATES EXPOSITION
1305 MEMORIAL DRIVE
WEST SPRINGFIELD,
MASSACHUSETTS

MAINE STATE BUILDING REPAIRS MASSACHUSETTS EASTERN STATES "BIG E"

WINDOW REMOVALS DETAILS (BID OPTION 1)

SCALE: AS NOTED
DATE: 05-26-15
DWG.: **AD620**
SHEET: **4** OF **14**

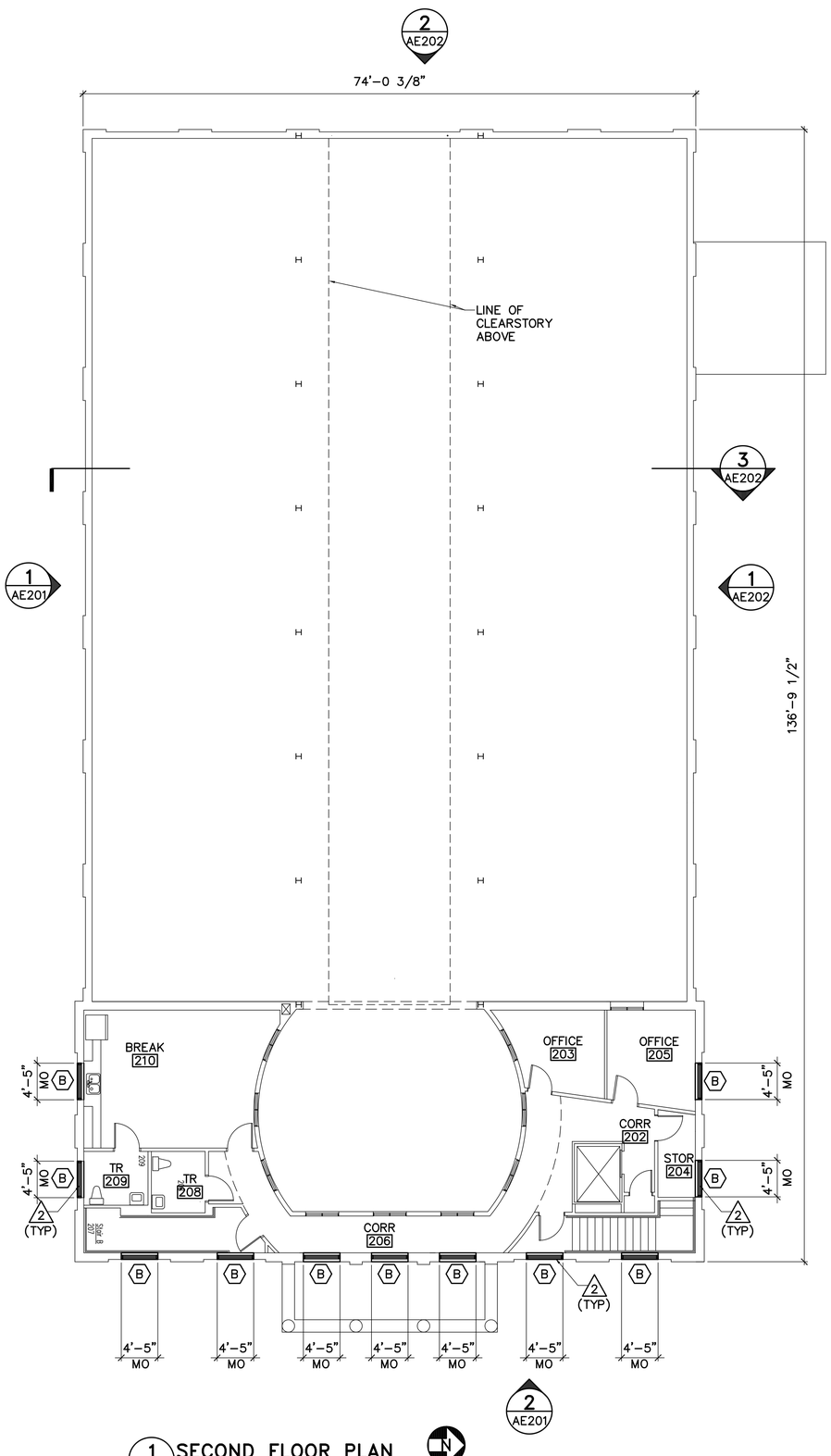

1 SECOND FLOOR PLAN
AE101 SCALE: 1/8"=1'-0"

PLAN NORTH

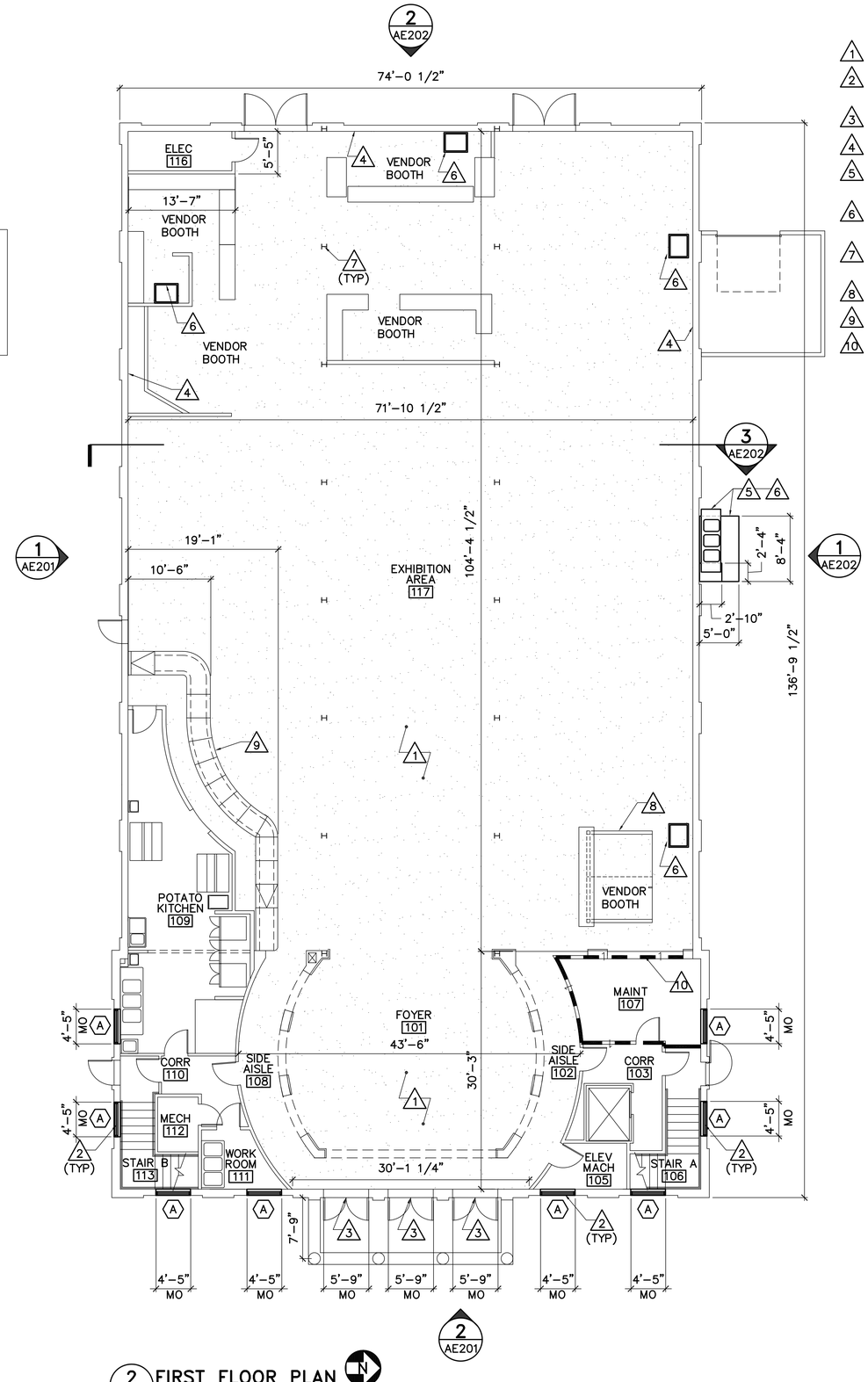

2 FIRST FLOOR PLAN
AE101 SCALE: 1/8"=1'-0"

PLAN NORTH

KEYNOTES: (THIS SHEET ONLY)

1. PROVIDE FLOOR FINISH AS SCHEDULED.
2. PROVIDE WINDOW AND TRIM IN EXISTING OPENING. REFER TO AE620 FOR WINDOW TYPES. (BID OPTION 1)
3. PROVIDE DOOR HARDWARE HWS-1. (BID OPTION 2)
4. PAINT EXISTING MASONRY WALL. (BID OPTION 3)
5. PROVIDE CONCRETE PAD. REFER TO DETAIL 4/AE401. (BID OPTION 4)
6. PROVIDE SINK, REFER TO MEP DRAWINGS. (BID OPTION 4)
7. PAINT EXISTING STEEL COLUMNS TO 7'-0" HEIGHT (TYP). (BID OPTION 3)
8. REINSTALL RELOCATED VENDOR BOOTH.
9. EXISTING VENDOR COUNTER/BOOTH.
10. PROVIDE FIRE STOPPING AT PENETRATIONS THROUGH EXISTING RATED WALL CONSTRUCTION. REFER TO MEP DRAWINGS. (BID OPTION 6)

LEGEND:

EPOXY FLOOR FINISH

FIRE RATINGS LEGEND

1 EXISTING 1-HOUR FIRE RATED WALL

GRAPHIC SCALE
8' 4' 0 8' 16'
1/8"=1'-0"
CHECK GRAPHIC SCALE BEFORE USING

22 May, 2015 - 11:39am
Y:\21501.01\21501.01-AE101.dwg

OAK POINT ASSOCIATES
ARCHITECTURE ■ ENGINEERING ■ PLANNING
231 Main Street, Biddeford, Maine 04005 (T) 207.283.0193 (F) 207.283.4283
www.oakpoint.com

DESIGNED BY: WVB
DRAWN BY: DEM
CHECKED BY: JMc
PROJECT: 21501.01

THE STATE OF MAINE BUILDING
AT THE EASTERN STATES EXPOSITION
1305 MEMORIAL DRIVE
WEST SPRINGFIELD,
MASSACHUSETTS

MAINE STATE BUILDING REPAIRS
MASSACHUSETTS EASTERN
STATES "BIG E"

FIRST & SECOND FLOOR PLANS

SCALE: AS NOTED
DATE: 05-26-15
DWG.: AE101
SHEET: 5 OF 14

KEYNOTES: (THIS SHEET ONLY)

1. PROVIDE WINDOW AND TRIM IN EXISTING OPENING. REFER TO AE620 FOR WINDOW TYPES. PAINT WINDOWS AND TRIM. (BID OPTION 1)
2. PROVIDE DOOR HARDWARE HWS-1. (BID OPTION 2)
3. PAINT EXISTING WOOD. (BID OPTION 3)
4. PAINT DOORS, TRIM AND TRANSOMS. (BID OPTION 3)
5. PROVIDE ROOF EXHAUST FAN. REFER TO MEP DRAWINGS. (BID OPTION 5)

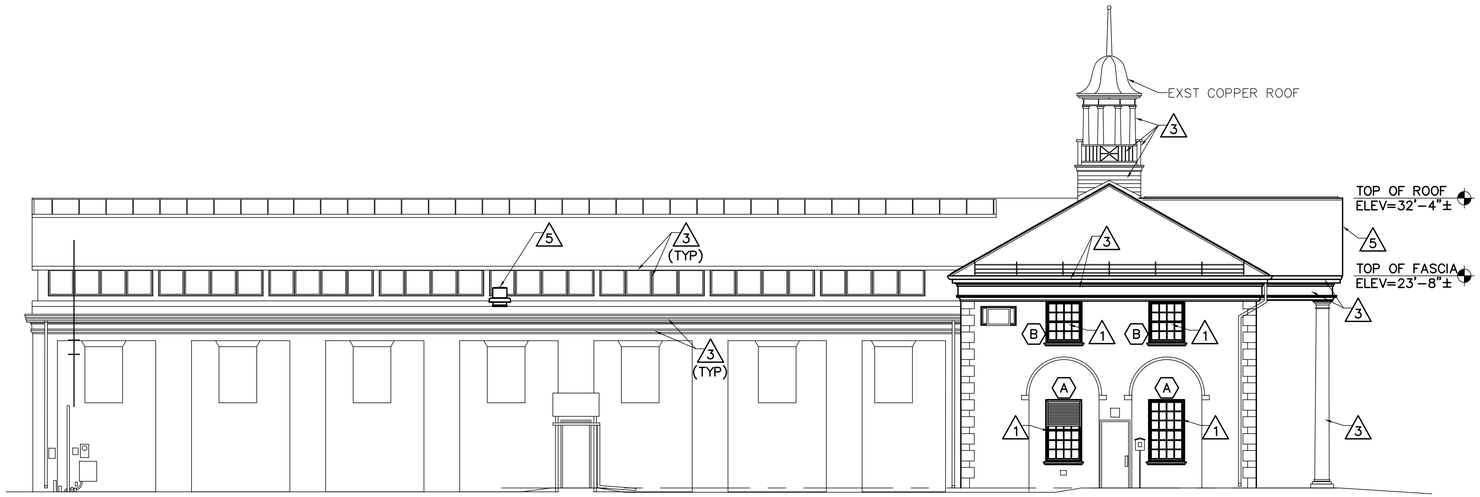

1 AE201 EAST ELEVATION
SCALE: 1/8"=1'-0"

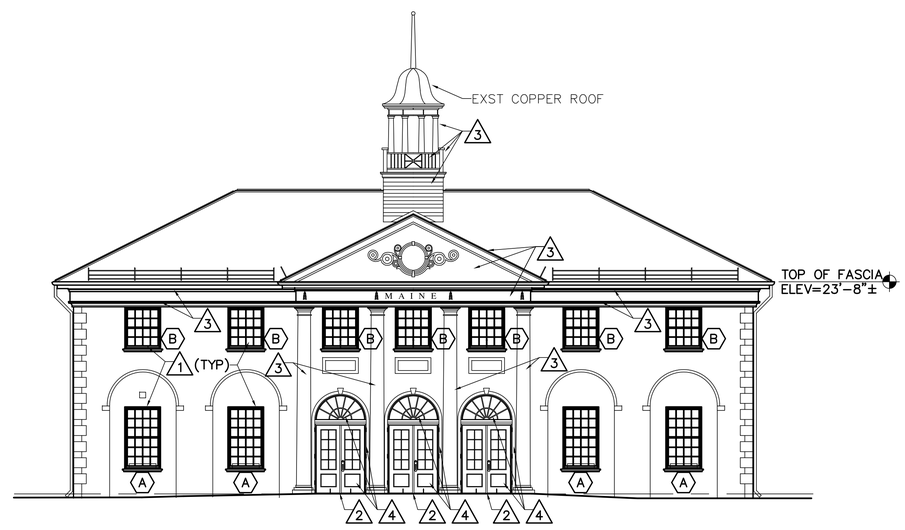

2 AE201 NORTH ELEVATION
SCALE: 1/8"=1'-0"

GRAPHIC SCALE
1/8"=1'-0"
8' 4' 0 8' 16'
CHECK GRAPHIC SCALE BEFORE USING

22 May, 2015 – 11:39am
Y:\21501.01\21501.01-AE201.dwg

OAK POINT ASSOCIATES
ARCHITECTURE ■ ENGINEERING ■ PLANNING
231 Main Street, Biddeford, Maine 04005 (T) 207.283.0193 (F) 207.283.4283
www.oakpoint.com

DESIGNED BY: WVB
DRAWN BY: DEM
CHECKED BY: JMc
PROJECT: 21501.01

THE STATE OF MAINE BUILDING
AT THE EASTERN STATES EXPOSITION
1305 MEMORIAL DRIVE
WEST SPRINGFIELD,
MASSACHUSETTS

MAINE STATE BUILDING REPAIRS
MASSACHUSETTS EASTERN
STATES "BIG E"

EXTERIOR ELEVATIONS

SCALE: AS NOTED
DATE: 05-26-15
DWG.: AE201
SHEET: 6 OF 14

KEYNOTES: (THIS SHEET ONLY)

1. PROVIDE WINDOW AND TRIM IN EXISTING OPENING. REFER TO AE620 FOR WINDOW TYPES. PAINT WINDOWS AND TRIM. (BID OPTION 1)
2. PROVIDE DOOR HARDWARE AS SCHEDULE. (BID OPTION 2)
3. PAINT EXISTING WOOD. (BID OPTION 3)
4. PAINT EXISTING DOORS, TRIM AND TRANSOMS. (BID OPTION 3)
5. PROVIDE ROOF EXHAUST FAN, SEE DETAIL 4/AE701. REFER TO MEP DRAWINGS. (BID OPTION 5)
6. PROVIDE SINK ON CONCRETE PAD. REFER TO MEP DRAWINGS. (BID OPTION 3)
7. PROVIDE PLUMBING VENT UP TO ROOF EAVE. REFER TO MEP DRAWINGS. (BID OPTION 3)
8. SEAL WALL PENETRATIONS FOR PLUMBING WORK. (BID OPTION 3)

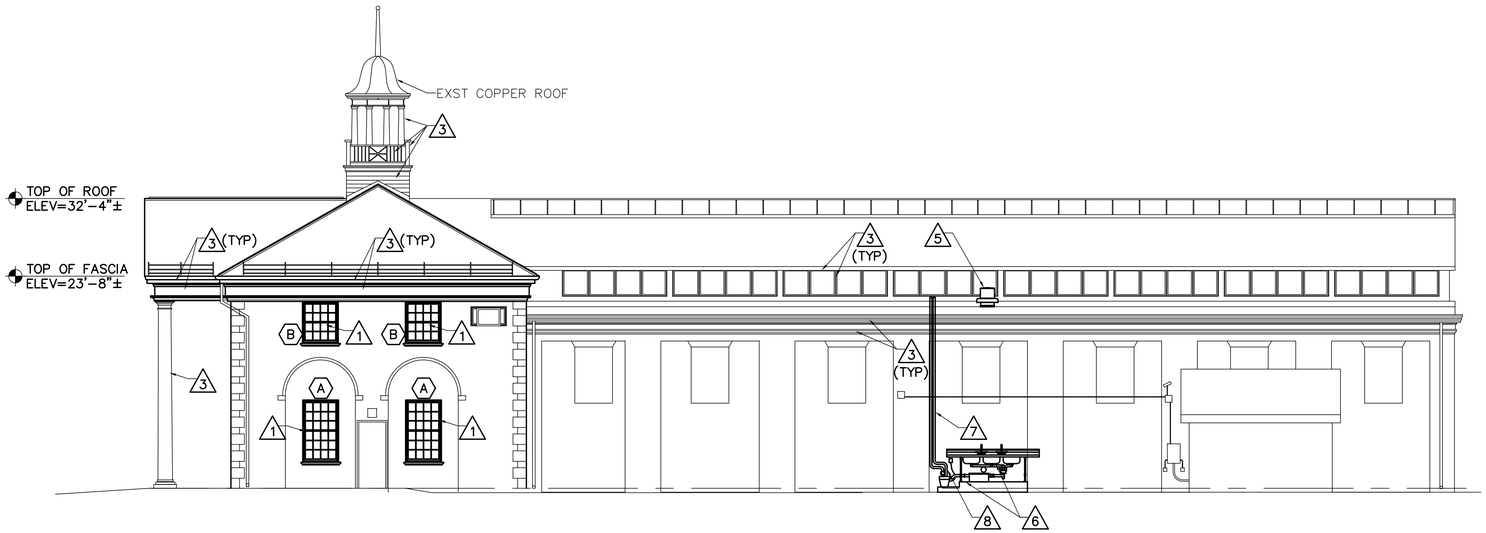

1 AE202 **WEST ELEVATON**
SCALE: 1/8"=1'-0"

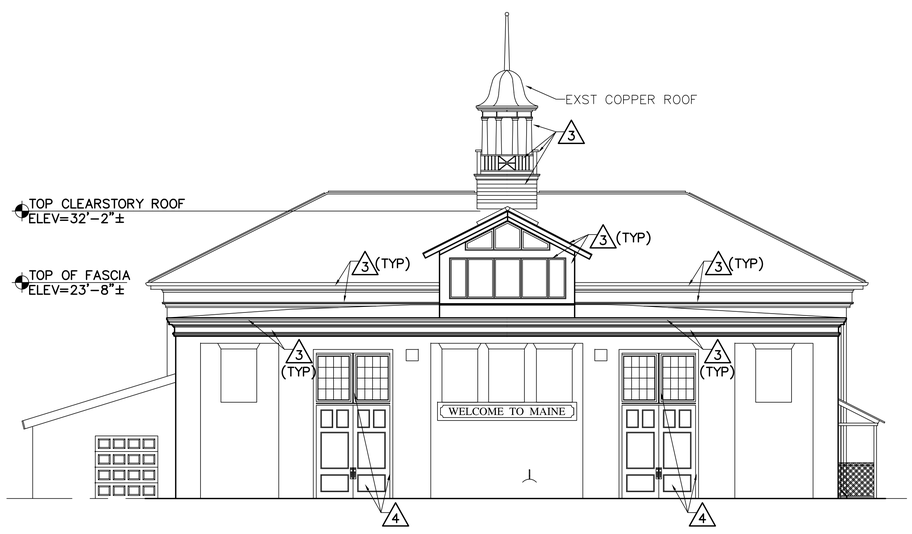

2 AE202 **SOUTH ELEVATON**
SCALE: 1/8"=1'-0"

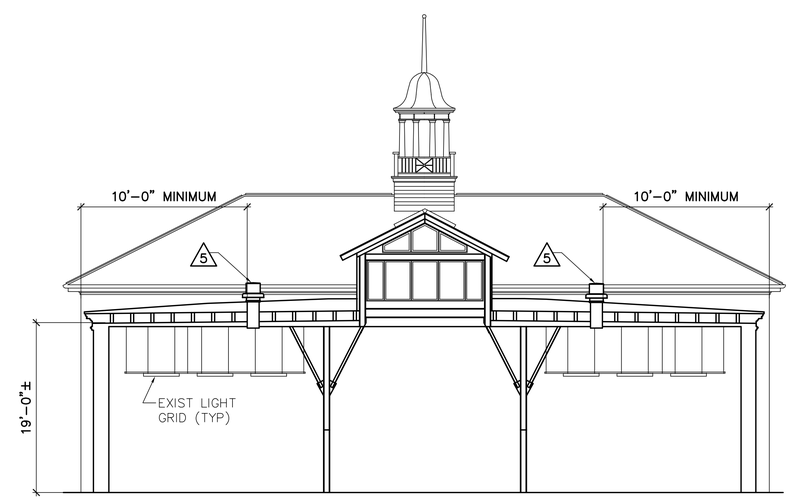

3 AE202 **BUILDING SECTION**
AE101
SCALE: 1/8"=1'-0"

GRAPHIC SCALE
1/8"=1'-0"
8' 4' 0 8' 16'
CHECK GRAPHIC SCALE BEFORE USING

22 May, 2015 – 11:38am
Y:\21501.01\21501.01-AE202.dwg

OAK POINT ASSOCIATES
ARCHITECTURE ■ ENGINEERING ■ PLANNING
231 Main Street, Biddeford, Maine 04005 (T) 207.283.0193 (F) 207.283.4283
www.oakpoint.com

DESIGNED BY: WVB
DRAWN BY: DEM
CHECKED BY: JMc
PROJECT: 21501.01

THE STATE OF MAINE BUILDING AT THE EASTERN STATES EXPOSITION
1305 MEMORIAL DRIVE
WEST SPRINGFIELD,
MASSACHUSETTS

MAINE STATE BUILDING REPAIRS
MASSACHUSETTS EASTERN STATES "BIG E"

EXTERIOR ELEVATIONS AND BUILDING SECTION

SCALE: AS NOTED
DATE: 05-26-15
DWG.: **AE202**
SHEET: 7 OF 14

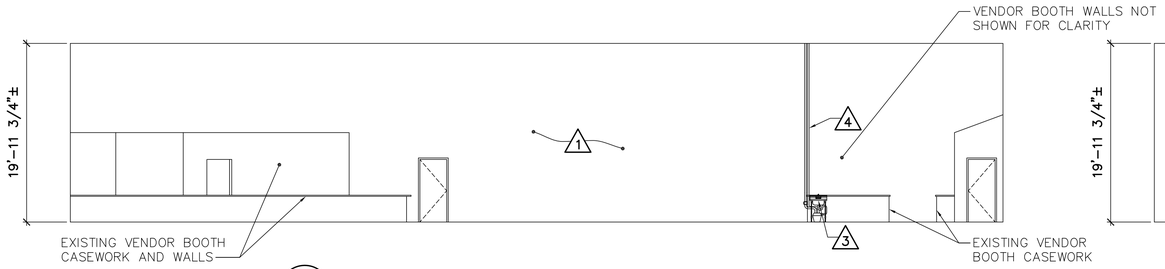

1 EXHIBITION AREA 177 ELEVATION
AE101 AE401 SCALE: 1/8"=1'-0"

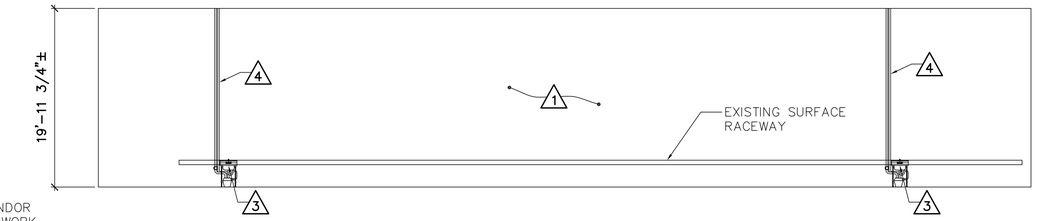

2 EXHIBITION AREA 177 ELEVATION
AE101 AE401 SCALE: 1/8"=1'-0"

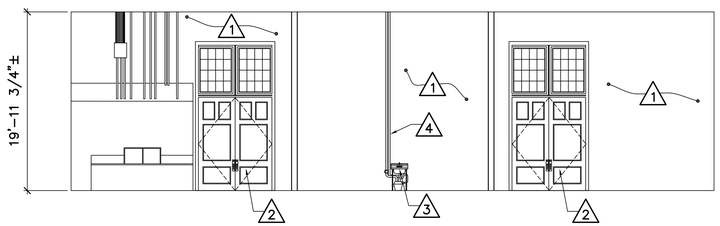

3 EXHIBITION AREA 177 ELEVATION
AE101 AE401 SCALE: 1/8"=1'-0"

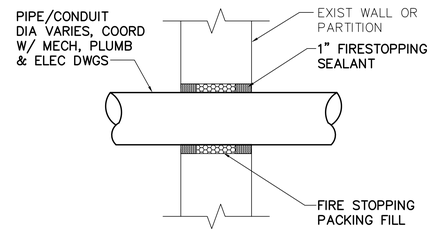

4 PIPE & CONDUIT WALL PENETRATION DETAIL (BID OPTION 6)
AE401 SCALE: 1-1/2"=1'-0"

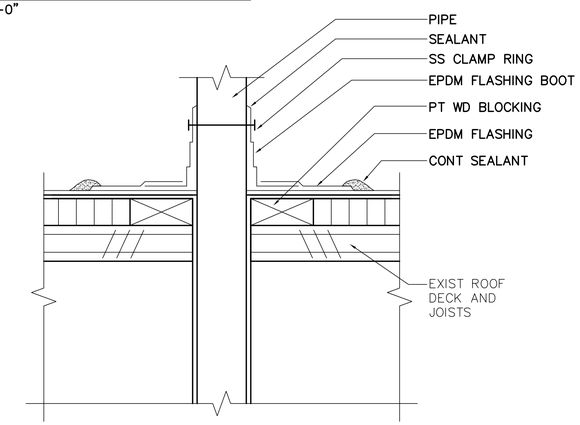

5 ROOF VENT DETAIL (BID OPTION 4)
AE120 AE401 SCALE: 3"=1'-0"

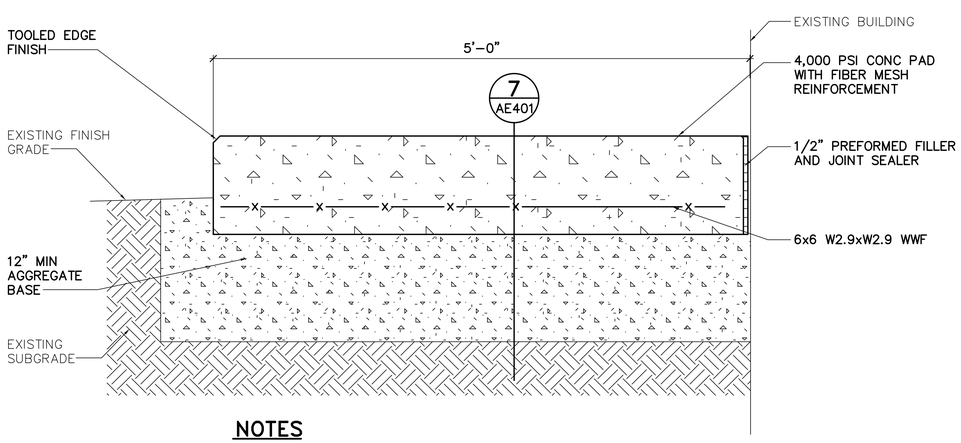

NOTES

1. PROVIDE MEDIUM BROOM FINISH.
2. PROVIDE 1/2" PREFORMED FILLER AND JOINT SEALER WHERE PAD ABUTS THE BUILDING.

6 CONCRETE PAD DETAIL (BID OPTION 4)
AE401 SCALE: 1 1/2"=1'-0"

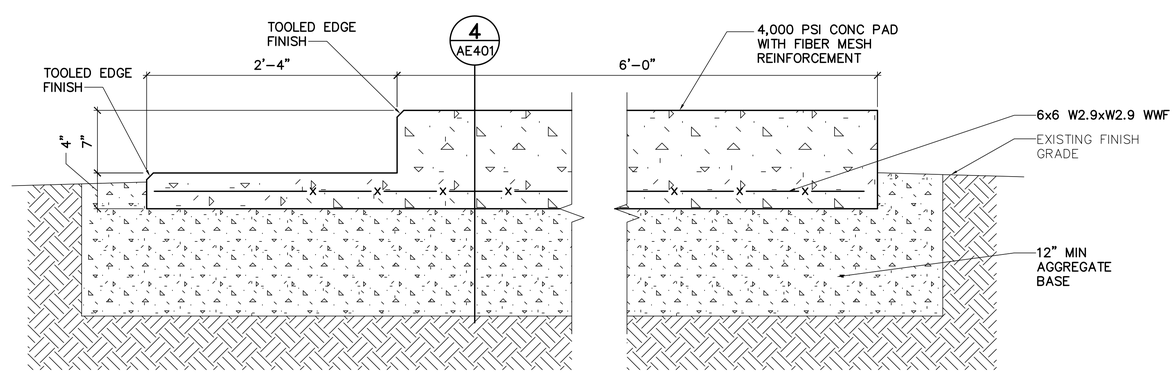

7 CONCRETE PAD DETAIL (BID OPTION 4)
AE401 SCALE: 1 1/2"=1'-0"

KEYNOTES: (THIS SHEET ONLY)

1. PAINT EXISTING MASONRY WALL. (BID OPTION 3)
2. PAINT EXISTING WOOD DOOR AND TRIM. (BID OPTION 3)
3. PROVIDE SINK, REFER TO MEP DRAWINGS. (BID OPTION 4)
4. PROVIDE PLUMBING VENT, WATER LINE AND WATER SUPPLY PIPES. REFER TO MEP DRAWINGS. (BID OPTION 4)

GRAPHIC SCALES

3"=1'-0" 6" 4" 2" 0 6"
1-1/2"=1'-0" 1' 8" 4" 0 1'
1/8"=1'-0" 8' 4' 0 8' 16'

CHECK GRAPHIC SCALES BEFORE USING

22 May, 2015 - 11:34am
Y:\21501.01\21501.01-AE401.dwg

OAK POINT ASSOCIATES
ARCHITECTURE ■ ENGINEERING ■ PLANNING
231 Main Street, Biddeford, Maine 04005 (T) 207.283.0193, (F) 207.283.4283
www.oakpoint.com

DESIGNED BY: WVB
DRAWN BY: MDF
CHECKED BY: JMc
PROJECT: 21501.01

THE STATE OF MAINE BUILDING AT THE EASTERN STATES EXPOSITION
1305 MEMORIAL DRIVE WEST SPRINGFIELD, MASSACHUSETTS

MAINE STATE BUILDING REPAIRS
MASSACHUSETTS EASTERN STATES "BIG E"

INTERIOR ELEVATIONS AND MISC DETAILS

SCALE: AS NOTED
DATE: 05-26-15
DWG.: AE401
SHEET: 8 OF 14

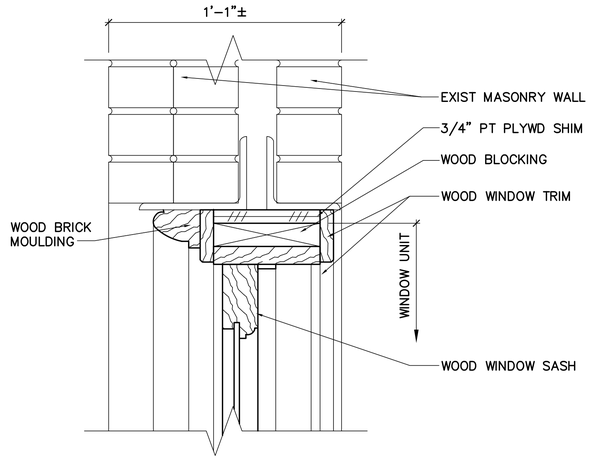

1 AE620 WINDOW HEAD DETAIL
SCALE: 3"=1'-0"

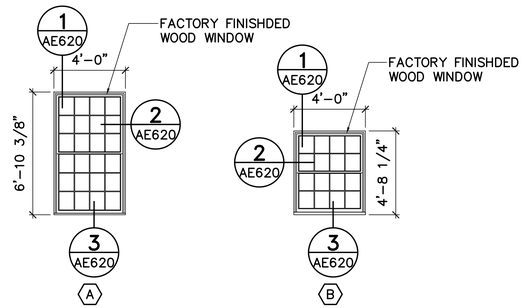

WINDOW TYPES
SCALE: 1/4"=1'-0"

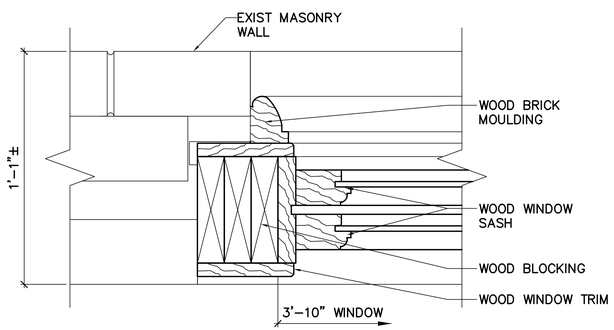

2 AE620 WINDOW JAMB DETAIL
SCALE: 3"=1'-0"

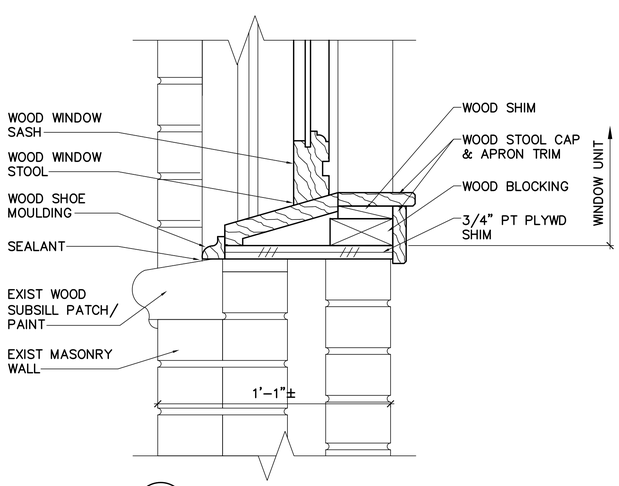

3 AE620 WINDOW SILL DETAIL
SCALE: 3"=1'-0"

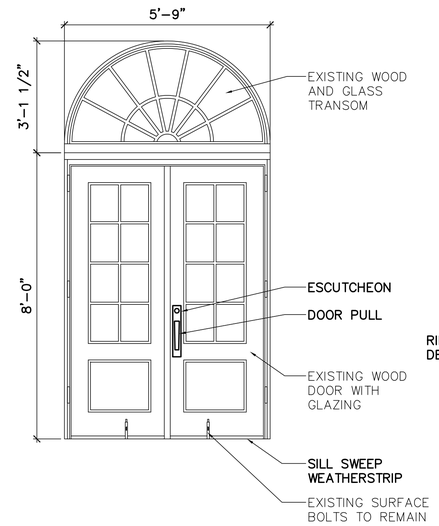

4 AE620 EXTERIOR DOOR ELEVATION
SCALE: 1/2"=1'-0"

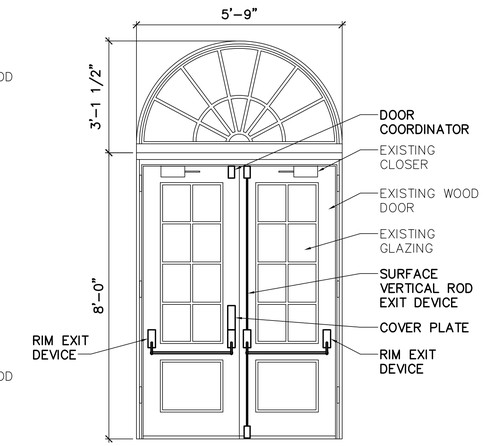

5 AE620 INTERIOR DOOR ELEVATION
SCALE: 1/2"=1'-0"

NOTES:

1. COORDINATE HARDWARE WITH EXISTING DOOR PREPARATIONS. EXISTING PREPARATION HOLES ARE TO RECEIVE ESCUTCHEONS OR COVER PLATES.
2. COORDINATE EXIT DEVICE LOCATIONS WITH EXISTING DOOR STILES.
3. PROVIDE RECESSED SILL RECEIVER FOR VERTICAL ROD DEVICE LATCH BOLT.

BID OPTION 1

BID OPTION 2

GRAPHIC SCALES

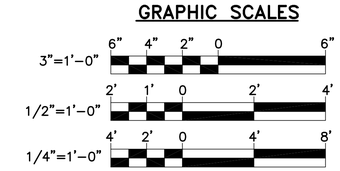

CHECK GRAPHIC SCALES BEFORE USING

22 May, 2015 - 11:37am
Y:\21501.01\21501.01-AE620.dwg

OAK POINT ASSOCIATES
ARCHITECTURE ■ ENGINEERING ■ PLANNING
231 Main Street, Biddeford, Maine 04005 (T) 207.283.0193 (F) 207.283.4283
www.oakpointll.com

DESIGNED BY: WVB
DRAWN BY: DEM
CHECKED BY: JMc
PROJECT: 21501.01

THE STATE OF MAINE BUILDING
AT THE EASTERN STATES EXPOSITION
1305 MEMORIAL DRIVE
WEST SPRINGFIELD,
MASSACHUSETTS

MAINE STATE BUILDING REPAIRS
MASSACHUSETTS EASTERN
STATES "BIG E"

WINDOW DETAILS AND WINDOW TYPES, DOOR ELEVATIONS

SCALE: AS NOTED
DATE: 05-26-15
DWG.: AE620
SHEET: 9 OF 14

GENERAL NOTES:

1. ROOF PENETRATIONS TO BE WATERTIGHT.
2. DO NOT CUT EXISTING STRUCTURAL ROOF MEMBERS.

KEYNOTES: (THIS SHEET ONLY)

1. PROVIDE ROOF OPENING FOR EXHAUST FAN. SEE DETAIL 3/AE701. (BID OPTION 5)
2. REINSTALL CEILING GRID AND PANELS THAT WERE REMOVE FOR ABOVE CEILING PLUMBING WORK. (BID OPTION 4)
3. PROVIDE ROOF EXHAUST FAN CURB. REFER TO MEP DRAWINGS. SEE DETAIL 4/AE701. (BID OPTION 5)
4. PROVIDE VENT THROUGH ROOF. REFER TO MEP DRAWINGS. SEE DETAIL 5/AE401. (BID OPTION 4)

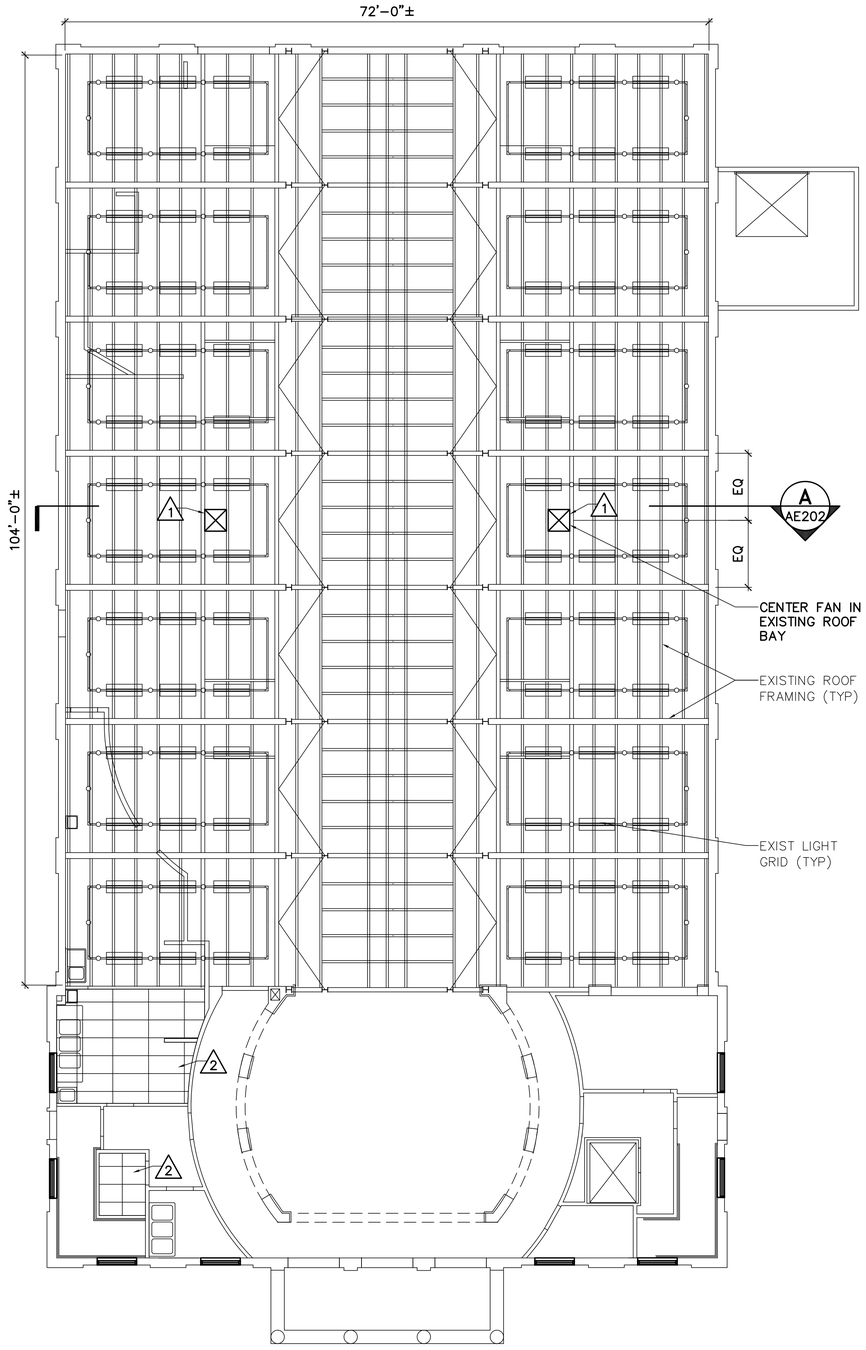

1 AE701 REFLECTED CEILING PLAN
SCALE: 1/8"=1'-0"

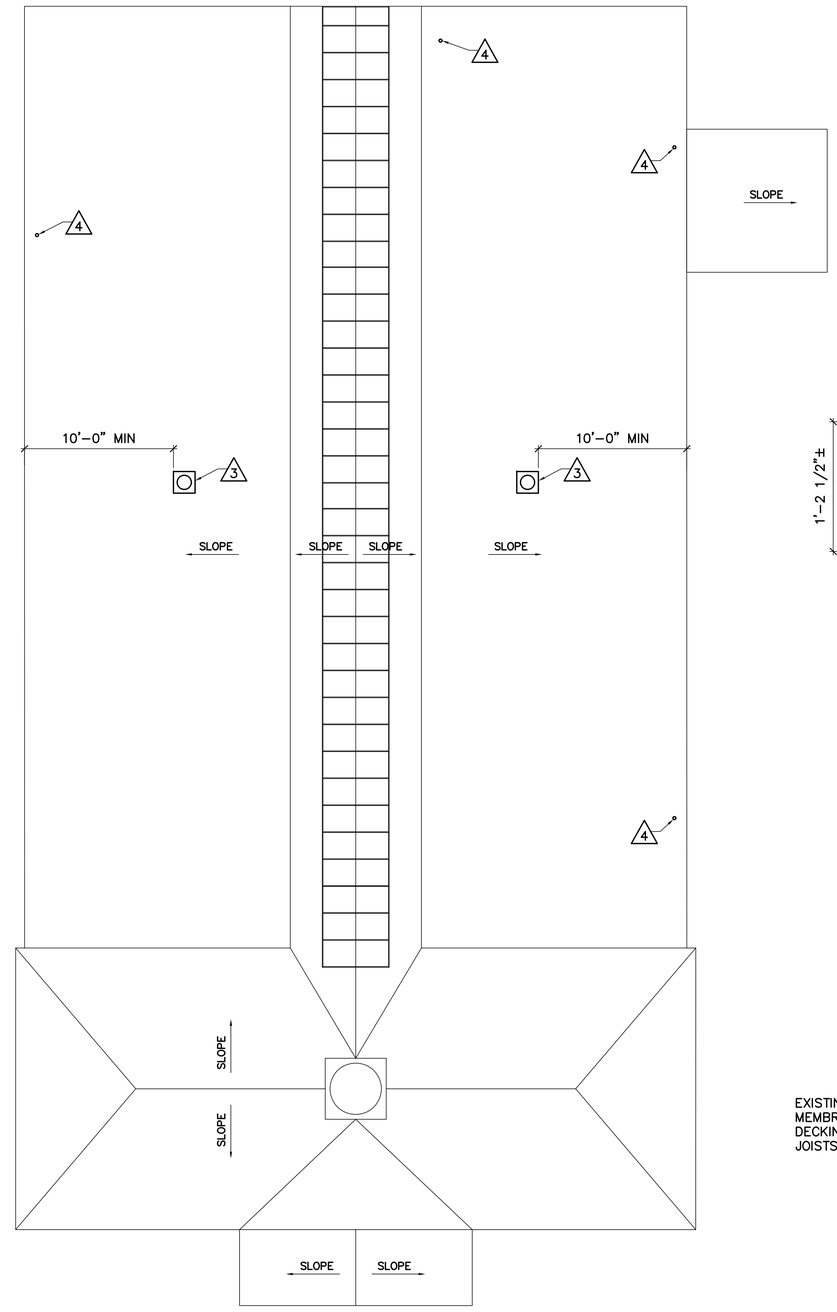

2 AE701 RROOF PLAN
SCALE: 1/8"=1'-0"

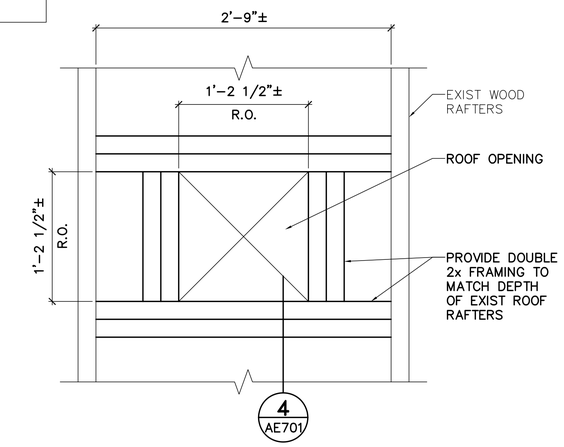

NOTE

1. PROVIDE FACE MOUNTED GALVANIZED JOIST HANGERS TO CONNECT (2) 2x FRAMING. DEPTH OF HANGERS SHALL MATCH DEPTH OF EXISTING FRAMING MEMBERS. HANGERS SHALL HAVE A MINIMUM ALLOWABLE CAPACITY OF 200 POUNDS.

3 AE701 FAN CURB FRAMING PLAN
SCALE: 1 1/2"=1'-0"

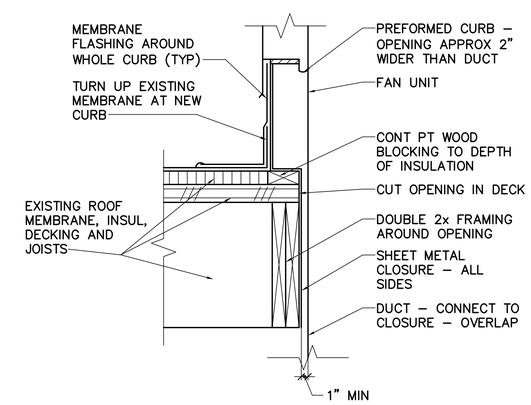

4 AE701 ROOF CURB DETAIL
SCALE: 1 1/2"=1'-0"

GRAPHIC SCALES

1-1/2"=1'-0" 1' 8" 4" 0 1'

1/8"=1'-0" 8' 4' 0 8' 16'

CHECK GRAPHIC SCALES BEFORE USING

22 May, 2015 – 11:35am
Y:\21501.01\21501.01-AE701.dwg

OAK POINT ASSOCIATES
ARCHITECTURE ■ ENGINEERING ■ PLANNING
231 Main Street, Biddeford, Maine 04005 (T) 207.283.0193 (F) 207.283.4283
www.oakpointll.com

DESIGNED BY: WVB
DRAWN BY: DEM
CHECKED BY: JMc
PROJECT: 21501.01

THE STATE OF MAINE BUILDING AT THE EASTERN STATES EXPOSITION
1305 MEMORIAL DRIVE WEST SPRINGFIELD, MASSACHUSETTS

MAINE STATE BUILDING REPAIRS
MASSACHUSETTS EASTERN STATES "BIG E"

REFLECTED CEILING, ROOF PLAN AND DETAILS

SCALE: AS NOTED
DATE: 05-26-15
DWG.: AE701
SHEET: 10 OF 14

MECHANICAL & PLUMBING ABBREVIATIONS

A	AMP	IN	INCHES
@	AT	IDW	INDIRECT WASTE
AFF	ABOVE FINISHED FLOOR	LWT	LEAVING WATER TEMPERATURE
BFP	BACK FLOW PREVENTER	MAX	MAXIMUM
BTU	BRITISH THERMAL UNIT	MIN	MINIMUM
BVIV	BALL VALVE IN VERTICAL	N/A	NOT APPLICABLE
CFM	CUBIC FEET PER MINUTE	NFWH	NON–FREEZE WALL HYDRANT
CP	CIRCULATOR PUMP	NO	NUMBER
CW	COLD WATER	P	PUMP, PITCH
ø,DIA	DIAMETER	PD	PUMPED DISCHARGE
DHWR	DOMESTIC HOT WATER RETURN	PSI	POUNDS PER SQUARE INCH
DN	DOWN	RPM	REVOLUTIONS PER MINUTE
EF	EXHAUST FAN	RPZ	REDUCED PRESSURE ZONE
ESP	EXTERNAL STATIC PRESSURE	S	SINK, SANITARY
EWT	ENTERING WATER TEMPERATURE	SAN	SANITARY
E, EXIST	EXISTING	ST	STORAGE TANK
EXT	EXPANSION TANK	TEMP	TEMPERATURE
°F	DEGREES FAHRENHEIT	TMV	TEMPERATURE MIXING VALVE
FCO	FLOOR CLEANOUT	V	VENT
FT	FOOT/FEET	VIV	VALVE IN VERTICAL
GPM	GALLONS PER MINUTE	VTR	VENT TO ROOF
HP	HORSEPOWER	WC	WATER COLUMN
HTHW	HIGH TEMPERATURE HOT WATER	WH	WALL HYDRANT. WATER HEATER
HW	HOT WATER		

MECHANICAL & PLUMBING LINE TYPE LEGEND

——— SAN ———	SANITARY SEWER ABOVE FLOOR
— — SAN — —	SANITARY SEWER BELOW FLOOR
——— PD ———	PUMP DISCHARGE LINE
- - - - - - - - - -	VENT
— - — - — - — -	DOMESTIC COLD WATER
— - - — - - — - -	DOMESTIC HOT WATER
----------	DOMESTIC HOT WATER RETURN

MECHANICAL & PLUMBING LEGEND

H 2	SYMBOL PER ABBREVIATION LIST EQUIPMENT SEQUENCE NUMBER
	CONNECT TO EXISTING
FD	FLOOR DRAIN
	HOSE BIBB
	TEMPERATURE GAUGE
	PIPE TRANSITION
	ELBOW DOWN
	PIPE TEE UP OR UP AND DOWN
	ELBOW UP OR UP AND DOWN
	PIPE TEE DOWN
	STRAINER
	UNION
	CHECK VALVE
	CALIBRATED BALANCING VALVE WITH POSITIVE SHUTOFF
CO	CLEANOUT
P	PIPE PITCH DOWN
	PIPE ANCHOR
	CAP
	ALIGNMENT GUIDE
	REDUCED PRESSURE ZONE BACKFLOW PREVENTOR
	BALL VALVE
	GATE VALVE
FCO	FLOOR CLEANOUT

MECHANICAL & PLUMBING GENERAL NOTES

1. PERFORM WORK IN ACCORDANCE WITH APPLICABLE STATE AND LOCAL CODES. OBTAIN AND PAY FOR REQUIRED PERMITS.
2. INSTALL SANITARY DRAINAGE WITH A PITCH OF 1/4 INCH PER FOOT FOR BUILDING SANITARY PIPING 3 INCHES AND SMALLER AND A PITCH OF 1/8 INCH PER FOOT FOR BUILDING SANITARY PIPING 4 INCHES AND LARGER.
3. INSTALL PIPING SUCH THAT IT CAN BE FULLY DRAINED WITHOUT USE OF LADDERS OR COMPRESSED AIR. WHERE DRAINS ARE PROVIDED, TERMINATE ±24" ABOVE FLOOR AND PROVIDE LOCKING BALL VALVE. ALL PADLOCKS FURNISHED FOR THIS PURPOSE SHALL HAVE A COMMON KEY. DELIVER MINIMUM OF TWO COPIES OF KEY TO OWNER.
4. PIPING IS SHOWN DIAGRAMMATICALLY, EXACT LOCATION SHALL BE DETERMINED IN THE FIELD.
5. PROVIDE DRAINS AT DOMESTIC WATER PIPING LOW POINTS AND PITCH PIPING TO LOW POINTS DRAINS.
6. PIPING SHALL BE SUPPORTED FROM BUILDING STRUCTURE. PIPING SHALL BE SUPPORTED FROM TOP CHORD OF JOISTS. NO STRUCTURAL MEMBERS SHALL BE CUT.
7. PROVIDE ACCESSIBLE CLEANOUTS AT THE BASE OF STACKS, AT HORIZONTAL CHANGES OF DIRECTION GREATER THAN 45° AND WHERE SHOWN ON DRAWINGS.
8. PIPING DROPS TO FIXTURES SHALL BE ANCHORED SOLID TO WALL WITH STEEL SUPPORT BRACKET WITH ADJUSTABLE CLIP.
9. HOSE END VALVES SHALL BE PROVIDED WITH HOSE END VACUUM BREAKERS.
10. COORDINATE LOCATION OF PIPING WITH WORK OF OTHER TRADES. PERFORM CUTTING WORK ASSOCIATED WITH PLUMBING SYSTEMS.
11. REFER TO SHEET AE401 FOR APPLICABLE ARCHITECTURAL DETAILS.
12. AT EACH MIXING VALVE, AT CONNECTIONS TO ST–1 AND CP–1, AND EVERY 40' ALONG HTHW PIPING, AFFIX LABEL "HIGH TEMPERATURE HOT WATER"
13. MATERIAL REQUIREMENTS:

    PIPING AND FITTINGS SHALL BE COPPER SWEAT OR THREADED; OR CAST IRON NO HUB (SANITARY AND VENT ONLY).

    SERVICE VALVES SHALL BE BRONZE BODY WITH FULL–PORT STAINLESS STEEL BALL.

    MIXING VALVES SHALL BE ASSE 1070 RAPID–RESPONSE, ADJUSTABLE DISCHARGE TEMPERATURE, SUITABLE FOR FLOW OF CONNECTED FIXTURES.

    INSULATION ON HOT PIPING SHALL BE PREFORMED FIBERGLASS WITH FACTORY–APPLIED SELF–SEALING ASJ OR FSK JACKET, PREFORMED FITTING COVERS, AND PREFORMED PVC JACKETS ON FITTING COVERS AND PIPING BELOW 8' ABOVE FLOOR.

    INSULATION ON COLD PIPING SHALL BE IMPERMEABLE FLEXIBLE ELASTOMERIC WITH CONTINUOUS WHITE PVC COVER, FULLY VAPOR SEALED AT ALL JOINTS AND FITTINGS AND THROUGH HANGERS AND SLEEVES.

    INSULATION IS NOT REQUIRED ON SANITARY OR VENT PIPING.

LINE TYPE LEGEND

----------	REMOVE EXISTING ITEMS
————————	EXIST ITEMS TO REMAIN
————————	PROVIDE ITEMS

OAK POINT ASSOCIATES
ARCHITECTURE ■ ENGINEERING ■ PLANNING
231 Main Street, Biddeford, Maine 04005 (T) 207.283.0193 (F) 207.283.4283
www.oakpoint.com

COMMONWEALTH OF MASSACHUSETTS
JASON W. CHENARD
No. 18543
REGISTERED PROFESSIONAL ENGINEER

DESIGNED BY: JWC/DCL
DRAWN BY: RDA
CHECKED BY: WVB
PROJECT: 21501.01

THE STATE OF MAINE BUILDING AT THE EASTERN STATES EXPOSITION
1305 MEMORIAL DRIVE
WEST SPRINGFIELD, MASSACHUSETTS

MAINE STATE BUILDING REPAIRS
MASSACHUSETTS EASTERN STATES "BIG E"

MECHANICAL AND PLUMBING LEGENDS AND GENERAL REQUIREMENTS

SCALE: AS NOTED
DATE: 05-26-15
DWG.: MEP001
SHEET: 11 OF 14

22 May, 2015 – 1:48pm
C:\dfile\21501.01–MEP001.dwg

ELECTRICAL ABBREVIATIONS

A, AMP	AMPERE
AC	ALTERNATING CURRENT
AFF	ABOVE FINISHED FLOOR
AIC	AMPERE INTERRUPTING CAPACITY
AWG	AMERICAN WIRE GAUGE
BKR	BREAKER
C	CONDUCTOR, CONDUIT
CB	CIRCUIT BREAKER
CKT	CIRCUIT
DWG	DRAWING
EMT	ELECTRICAL METALLIC TUBING
G	GROUND; GROUND FAULT CIRCUIT INTERRUPTER
GFCI	GROUND FAULT CIRCUIT INTERRUPTER
HP	HORSEPOWER
HVAC	HEATING, VENTILATION, AND AIR CONDITIONING
KW	KILO–WATT
NEMA	NATIONAL ELECTRICAL MANUFACTURERS ASSOCIATION
NFPA	NATIONAL FIRE PROTECTION ASSOCIATION
NO, #	NUMBER
ø	PHASE
P	POLE
REC	RECEPTACLE
RMC	RIGID METAL CONDUIT
THHN	HEAT RESISTANT THERMOPLASTIC WIRE WITH NYLON JACKET
THWN	MOISTURE & HEAT RESISTANT THERMOPLASTIC WIRE WITH NYLON JACKET
UL	UNDERWRITERS LABORATORIES
V	VOLT
VA	VOLT AMPERE
W	WATT, WIRE
WP	WEATHERPROOF

ELECTRICAL LEGEND

A–1	BRANCH CIRCUIT HOMERUN, A–1 INDICATES PANEL DESIGNATION AND CIRCUIT NUMBER
	EXISTING PANELBOARD
	MOTOR
G WP	DUPLEX RECEPTACLE, 120V, 20A SPECIFICATION GRADE, NEMA 5–20R "G" INDICATES GROUND FAULT CIRCUIT INTERRUPTER. "WP" INDICATES WEATHERPROOF WHILE IN USE

ELECTRICAL GENERAL NOTES

1. ELECTRICAL INSTALLATION SHALL COMPLY WITH THE REQUIREMENTS OF THE LATEST EDITION OF THE NATIONAL ELECTRICAL CODE (NEC), NFPA, AND STATE AND LOCAL CODES.
2. WORK SHALL BE COORDINATED WITH ARCHITECTURAL, CIVIL, STRUCTURAL, AND MECHANICAL TRADES.
3. ELECTRICAL EQUIPMENT AND WIRING SHALL BE NEW AND UL LISTED UNLESS OTHERWISE NOTED.
4. LIGHT FIXTURES AND OTHER CEILING MOUNTED ELECTRICAL EQUIPMENT SHALL BE COORDINATED WITH ARCHITECTURAL, STRUCTURAL, AND MECHANICAL WORK TO AVOID INTERFERENCE.
5. A SEPARATE GREEN GROUNDING CONDUCTOR SHALL BE PROVIDED FOR EACH INDIVIDUAL CIRCUIT. METAL CONDUIT SHALL BE GROUNDED BUT SHALL NOT BE USED AS THE EQUIPMENT GROUNDING CONDUCTOR.
6. THE CONTRACTOR SHALL VERIFY EXISTING CONDITIONS AND DIMENSIONS AND REPORT DISCREPANCIES TO THE OWNER'S REPRESENTATIVE. THE CONTRACTOR SHALL PROCEED WITH THE WORK ONLY AFTER THE DISCREPANCIES HAVE BEEN RESOLVED BY THE OWNER'S REPRESENTATIVE.
7. UNLESS OTHERWISE INDICATED, WIRE AND CONDUIT SIZE FOR EACH 15A 1P, 15A 2P, 20A 1P AND 20A 2P BRANCH CIRCUIT SHALL BE 2 #12 + #12G, IN 3/4"C.
8. UNLESS OTHERWISE INDICATED, WIRE AND CONDUIT SIZE FOR EACH 15A 3P AND 20A 3P BRANCH CIRCUIT SHALL BE 3 #12 + #12G, IN 3/4"C.
9. A SEPARATE NEUTRAL CONDUCTOR SHALL BE PROVIDED FOR EACH INDIVIDUAL 120V CIRCUIT.

LINE TYPE LEGEND

----------	REMOVE EXISTING ITEMS
————————	EXIST ITEMS TO REMAIN
————————	PROVIDE ITEMS

ELECTRICAL SPECIFICATIONS:

PRODUCTS

1. WIRING DEVICES
   A. SUBMIT PRODUCT DATA.
   B. GENERAL PURPOSE WIRING DEVICES: COMPLY WITH NEMA WD1.
   C. COLOR: IVORY
   D. RECEPTACLES: UL 498, HEAVY DUTY GRADE EXCEPT AS INDICATED OTHERWISE.
   E. SNAP SWITCHES: QUIET TYPE AC SWITCHES, 120/277V, 20A, COMPLYING WITH UL 20.
   F. WALL PLATES: SATIN–FINISH 302 STAINLESS STEEL.

2. WIRES AND CABLES
   A. BUILDING WIRES AND CABLES: TYPE THHN/THWN COPPER CONDUCTOR. COMPLY WITH NEMA WC 70/ICEA S–95–658.
   B. CONNECTORS AND SPLICES: WIRING CONNECTORS OF SIZE, AMPACITY RATING, MATERIAL, AND TYPE AND CLASS FOR APPLICATION AND FOR SERVICES INDICATED.
   C. MINIMUM SIZE WIRE SHALL BE #12 AWG.

3. RACEWAYS
   A. CONDUIT: ELECTRICAL METALLIC TUBING: ANSI C80.3
      RIGID GALVANIZED STEEL: ANSI C80.1
      FLEXIBLE METAL CONDUIT: UL 1.
   B. OUTLET AND DEVICE BOXES: UL 514A. UL LISTED AND LABELED SHEET METAL BOXES.
   C. PULL AND JUNCTION BOXES: UL 514A. SMALL SHEET METAL BOXES.
   D. MINIMUM SIZE CONDUIT SHALL BE 1/2".

5. CIRCUIT BREAKERS
   A. SUBMIT PRODUCT DATA.
   B. MOLDED–CASE CIRCUIT BREAKER: NEMA AB 1 AND UL 489.
      a. CHARACTERISTICS: FRAME SIZE, TRIP RATING, NUMBER OF POLES, AND AUXILIARY DEVICES AS INDICATED AND INTERRUPTING RATING TO MEET FAULT CURRENT.
      b. INTERRUPTING RATING: 22,000A.
      c. COMPATIBLE WITH EXISTING PANELBOARD.

INSTALLATION AND TESTING

1. WIRING DEVICES
   A. INSTALL DEVICES AND ASSEMBLIES PLUMB AND SECURE.
   B. MOUNT DEVICES FLUSH, WITH LONG DIMENSION VERTICAL, AND GROUNDING TERMINAL OF RECEPTACLES ON TOP. GROUP ADJACENT SWITCHES UNDER SINGLE, MULTIGANG WALL PLATES.
   C. PROTECT DEVICES AND ASSEMBLIES DURING PAINTING.
   D. INSTALL WALL PLATES WHEN PAINTING IS COMPLETE.
   E. MOUNT RECEPTACLES 24" AFF UNLESS NOTED OTHERWISE.

2. WIRING METHODS
   A. INSTALL WIRES AND CABLES ACCORDING TO THE NECA'S "STANDARD OF INSTALLATION."
   C. WIRING AT OUTLETS: INSTALL WITH AT LEAST 12 INCHES OF SLACK CONDUCTOR AT EACH OUTLET.
   D. INDOORS WIRING METHODS: AS FOLLOWS:
      a. CONNECTION TO VIBRATING EQUIPMENT (MOTOR–DRIVEN EQUIPMENT): FLEXIBLE METAL CONDUIT, EXCEPT IN WET OR DAMP LOCATIONS USE LIQUIDTIGHT FLEXIBLE METAL CONDUIT.
      b. EXPOSED: ELECTRICAL METALLIC TUBING.
      c. CONCEALED: ELECTRICAL METALLIC TUBING OR FMC.
      d. BOXES AND ENCLOSURES: NEMA 250, TYPE 1, EXCEPT IN DAMP OR WET LOCATIONS USE NEMA 250, TYPE 4, STAINLESS STEEL.
      e. INSTALL RACEWAYS, BOXES, ENCLOSURES, AND CABINETS AS INDICATED, ACCORDING TO MANUFACTURER'S WRITTEN INSTRUCTIONS.
      f. CONCEAL CONDUIT AND ELECTRICAL METALLIC TUBING, UNLESS OTHERWISE INDICATED, WITHIN FINISHED WALLS AND CEILINGS
   E: OUTDOOR WIRING METHODS
      a. EXPOSED OR CONCEALED: RIGID GALVANIZED STEEL.
      b. CONNECTION TO VIBRATING EQUIPMENT (MOTOR–DRIVEN EQUIPMENT): LIQUIDTIGHT FLEXIBLE METAL CONDUIT.
   F. USE RACEWAY FITTINGS COMPATIBLE WITH RACEWAY AND SUITABLE FOR USE AND LOCATION.
   G. INSTALL EXPOSED RACEWAYS PARALLEL TO OR AT RIGHT ANGLES TO NEARBY SURFACES OR STRUCTURAL MEMBERS, AND FOLLOW THE SURFACE CONTOURS AS MUCH AS PRACTICAL.
   H. JOIN RACEWAYS WITH FITTINGS DESIGNED AND APPROVED FOR THE PURPOSE AND MAKE JOINTS TIGHT. USE BONDING BUSHINGS OR WEDGES AT CONNECTIONS SUBJECT TO VIBRATION. USE BONDING JUMPERS WHERE JOINTS CANNOT BE MADE TIGHT. USE INSULATING BUSHINGS TO PROTECT CONDUCTORS.
   I. FLEXIBLE CONNECTIONS: USE MAXIMUM OF 72 INCHES OF FLEXIBLE CONDUIT FOR EQUIPMENT SUBJECT TO VIBRATION, NOISE TRANSMISSION, OR MOVEMENT; AND FOR ALL MOTORS. INSTALL SEPARATE GROUND CONDUCTOR ACROSS FLEXIBLE CONNECTIONS.
   J. PROVIDE COLOR CODING AS FOLLOWS:

240/120 VOLTS:	PHASE A – BLACK
	PHASE B – RED
	PHASE C – BLUE
	NEUTRAL – WHITE
	GROUND – GREEN

22 May, 2015 – 2:00pm
C:\dfile\21501.01–MEP002.dwg

OAK POINT ASSOCIATES
ARCHITECTURE ■ ENGINEERING ■ PLANNING
231 Main Street, Biddeford, Maine 04005 (T) 207.283.0193 (F) 207.283.4283
www.oakpoint.com

COMMONWEALTH OF MASSACHUSETTS
DALE C. LINCOLN II
ELECTRICAL
No. 48897
REGISTERED PROFESSIONAL ENGINEER
5/22/15

DESIGNED BY: JWC/DCL
DRAWN BY: RDA
CHECKED BY: WVB
PROJECT: 21501.01

THE STATE OF MAINE BUILDING
AT THE EASTERN STATES EXPOSITION
1305 MEMORIAL DRIVE
WEST SPRINGFIELD,
MASSACHUSETTS

MAINE STATE BUILDING REPAIRS
MASSACHUSETTS EASTERN
STATES "BIG E"

ELECTRICAL LEGENDS AND ELECTIRCAL GENERAL REQUIREMENTS

SCALE: AS NOTED

DATE: 05-26-15

DWG.: MEP002

SHEET: 12 OF 14

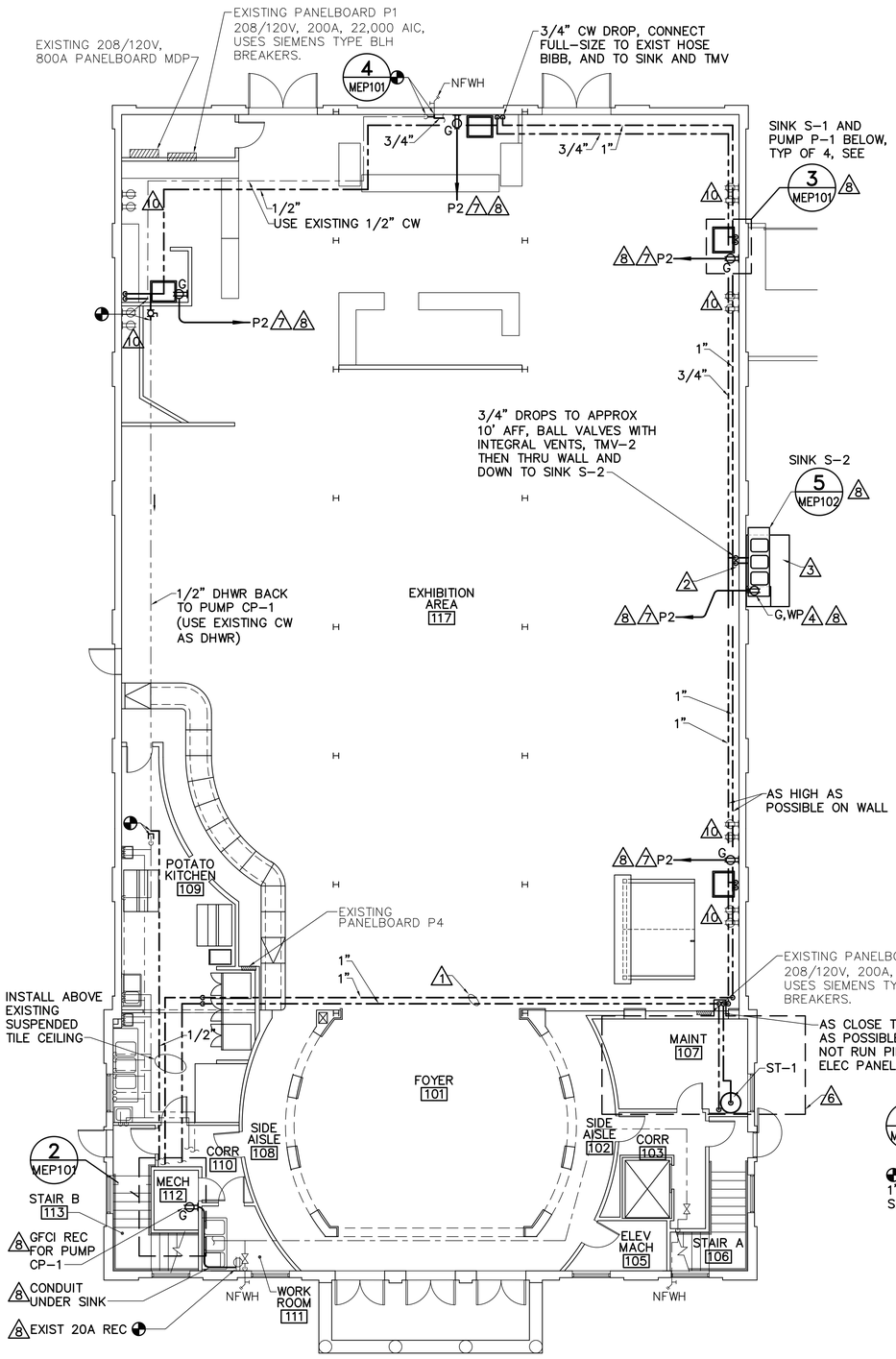

NOTE: SEE SHEET MEP102 FOR SANITARY AND VENT PIPING

1 FLOOR PLAN (MEP101)

SCALE: 1/8"=1'-0"

PLAN NORTH

MIXING VALVE SCHEDULE (BID OPTION 4)

UNIT NO	SERVES	INLET (IN)	OUTLET (IN)	SUPPLY TEMP F°	DESIGN GPM	MIN GPM	BASIS OF DESIGN	NOTES
TMV-1	S-1	1/2	1/2	110	2.2	0.5	WATTS LFMMV	1,2
TMV-2	S-2	1/2	1/2	110	4.4	0.5	WATTS LFMMV	2

NOTES: 1. FOUR (4) REQUIRED 2. MAXIMUM PRESSURE DROP 5 PSI

HOT WATER STORAGE TANK SCHEDULE (BID OPTION 6)

UNIT NO	STORAGE GALLONS	BASIS OF DESIGN
ST-1	119	HTP GL-119

NOTES:

PLUMBING FIXTURE ROUGH-IN SCHEDULE (BID OPTION 4)

UNIT NO	DESCRIPTION	SAN	VENT	HW	CW	BASIS OF DESIGN	NOTES
S-1	FREESTANDING SINK	1-1/2"	1-1/2"	1/2"	1/2"	EAGLE 414-22-1	1
S-2	THREE-BASIN SCULLERY SINK	1-1/2"	1-1/2"	1/2"	1/2"	EAGLE FN2060-3-30-14/3	2

NOTES: 1. FOUR (4) REQUIRED. 2. TWO (2) FAUCETS

EXPANSION TANK SCHEDULE (BASE BID)

UNIT NO	LOCATION	SERVES	ACCEPTANCE VOLUME	DIMENSIONS	BASIS OF DESIGN	NOTES
EXT-1	112 MECH	DOMESTIC HW	3.2	12"x15-5/8"	BELL & GOSSETT PTA-12	–

NOTES:

DRAWING KEYNOTES

1. RUN PIPE ALONG I-BEAM.
2. REFER TO 4/AE401 FOR PIPE PENETRATIONS.
3. REFER TO 6/AE401 FOR CONCRETE PAD DETAIL.
4. PROVIDE BRONZE/STAINLESS WEATHERPROOF PADLOCK ON WEATHERPROOF REC COVER AND DELIVER KEYS TO OWNER. PROVIDE COVER WITH NOTCHES ALLOWING LOCK TO BE APPLIED WITH CORD PLUGGED IN.
5. RECONNECT EXISTING CW AND HW PIPING.
6. PROVIDE ST-1 & ASSOCIATED PIPING UNDER BID OPTION 6.
7. CONNECT TO AN EXISTING SPARE 20A 1P CIRCUIT BREAKER IN EXISTING PANELBOARD (BID OPTION 4).
8. PROVIDE SINKS, PIPING, PUMPS, AND ASSOCIATED ACCESSORIES UNDER BID OPTION 4.
9. SET EXIST WATER HEATER TO SUPPLY 160°F HTHW.
10. PROVIDE GFCI PROTECTION FOR EXISTING RECEPTACLE LOCATED WITHIN 6' OF THE SINK (UNDER BID OPTION 4). FOR EACH RECEPTACLE TRACE CIRCUIT BACK TO SOURCE PANELBOARD (EITHER PANELBOARD P1 OR P2), REMOVE EXISTING 20A 1P CIRCUIT BREAKER AND PROVIDE A 20A 1P GFCI CIRCUIT BREAKER.

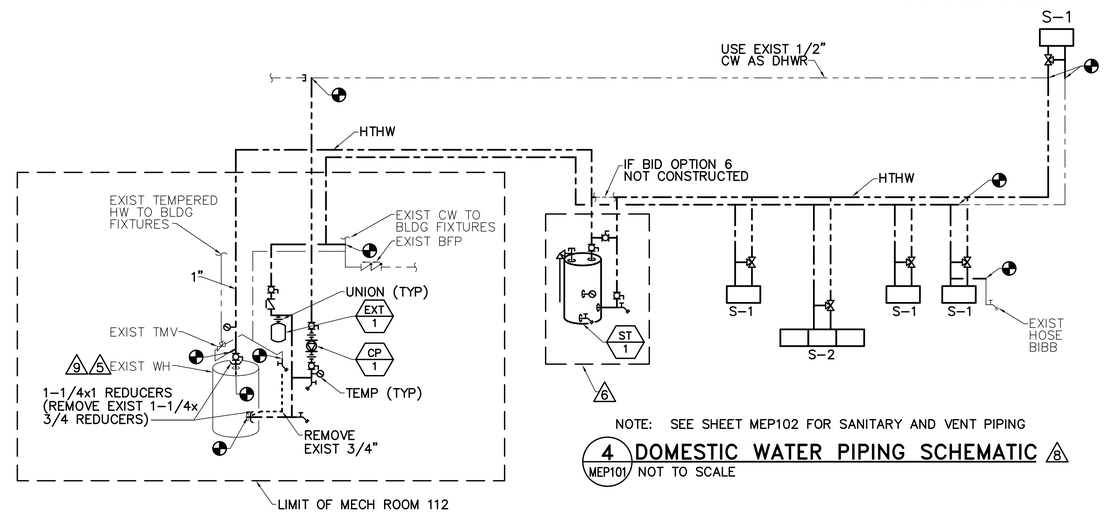

NOTE: SEE SHEET MEP102 FOR SANITARY AND VENT PIPING

4 DOMESTIC WATER PIPING SCHEMATIC (MEP101) 8

NOT TO SCALE

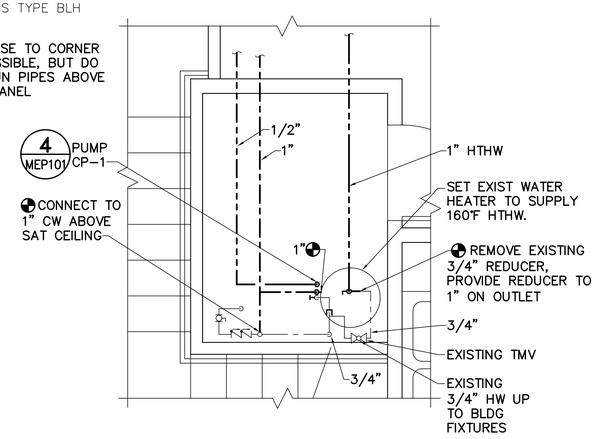

SEE FLOOR PLAN 1 THIS SHEET FOR ELECTRICAL WORK

2 WATER ENTRANCE ROOM (MEP101) 8

SCALE: 1/2"=1'-0"

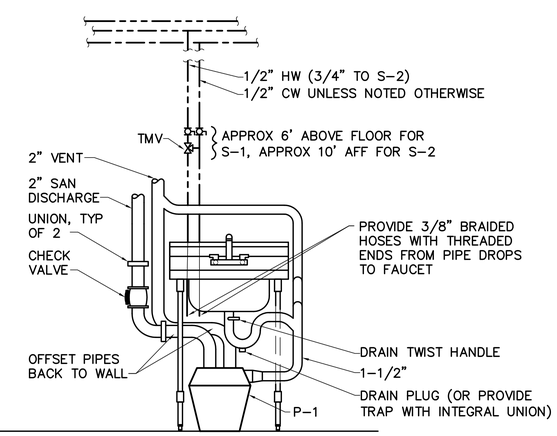

NOTE: PIPING OPPOSITE HAND WHERE REQUIRED

3 SINK S-1 DETAIL (MEP101) 8

NOT TO SCALE

COMMONWEALTH OF MASSACHUSETTS DALE C. LINCOLN, II ELECTRICAL No. 48667 REGISTERED PROFESSIONAL ENGINEER

5/22/15

GRAPHIC SCALES

1/2"=1'-0": 0, 1', 2', 3', 6'

1/8"=1'-0": 8', 4', 0, 8', 16'

CHECK GRAPHIC SCALES BEFORE USING

OAK POINT ASSOCIATES
ARCHITECTURE ■ ENGINEERING ■ PLANNING
231 Main Street, Biddeford, Maine 04005 (T) 207.283.0193 (F) 207.283.4283
www.oakpointoa.com

COMMONWEALTH OF MASSACHUSETTS JASON W. CHENARD No. 48543 REGISTERED PROFESSIONAL ENGINEER

DESIGNED BY: ARB/DCL
DRAWN BY: RDA
CHECKED BY: JWC
PROJECT: 21501.01

THE STATE OF MAINE BUILDING AT THE EASTERN STATES EXPOSITION
1305 MEMORIAL DRIVE WEST SPRINGFIELD, MASSACHUSETTS

MAINE STATE BUILDING REPAIRS
MASSACHUSETTS EASTERN STATES "BIG E"

WATER AND ELECTRICAL PLAN

SCALE: AS NOTED
DATE: 05-26-15
DWG.: MEP101
SHEET: 13 OF 14

22 May, 2015 – 1:59pm
C:\dfile\21501.01-MEP101.dwg

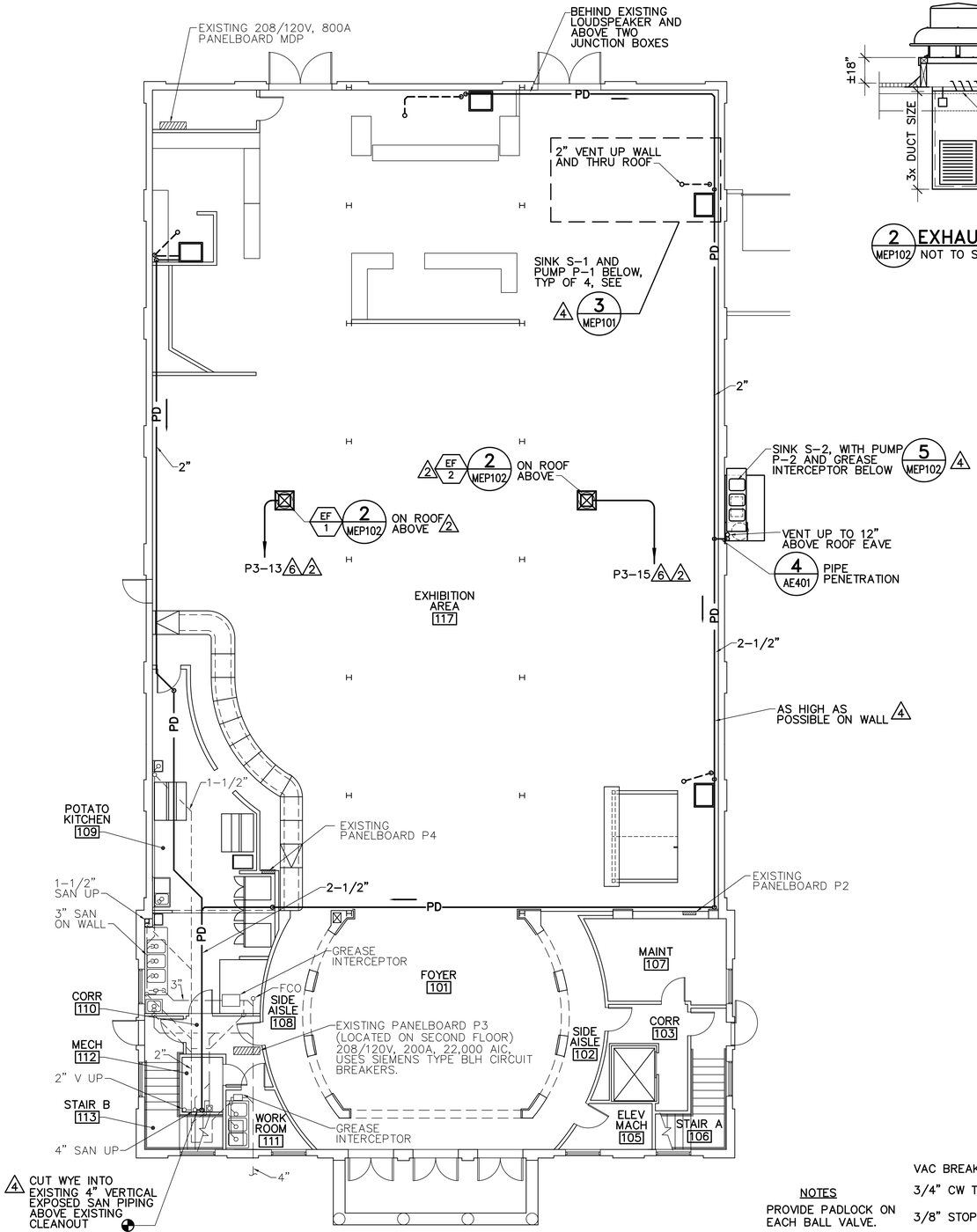

NOTE: SEE SHEET MEP101 FOR WATER PIPING

1 MEP102 FLOOR PLAN SCALE: 1/8"=1'-0"

PLAN NORTH

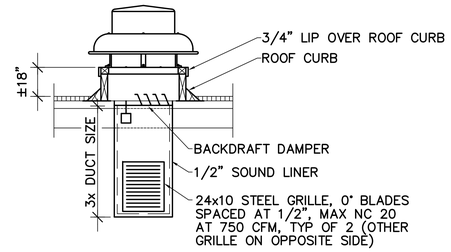

2 MEP102 EXHAUST FAN DETAIL
NOT TO SCALE

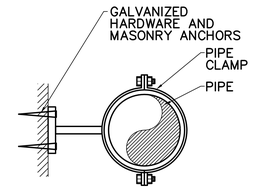

3 MEP102 EXTERIOR PIPE HANGER DETAIL
NOT TO SCALE

DRAWING KEYNOTES

1. PROVIDE ST-1 UNDER BID OPTION 6.
2. PROVIDE EXHAUST FANS UNDER BID OPTION 5.
3. PROVIDE ADJUSTABLE TIMER FOR CP-1. ADJUST TIMER AS DIRECTED BY OWNER.
4. PROVIDE SINKS, PIPING, PUMPS & ASSOCIATED ACCESSORIES UNDER BID OPTION 4.
5. COORDINATE GI-1 DIMENSIONS WITH S-2 TO FIT GI-1 UNDER SINK.
6. PROVIDE A 15A IP CIRCUIT BREAKER IN EXISTING PANELBOARD P3 (UNDER BID OPTION 5).

PUMP SCHEDULE (BID OPTION 4)

UNIT NO	SERVES	GPM	TOTAL HEAD	ELEC HP	ELEC VOLTS	BASIS OF DESIGN	NOTES
P-1	S-1	5	25	1/2	115/1	LIBERTY 405 PUMP WITH RECEIVER	1,3,4
P-2	S-2	20	25	3/4	115/1	LIBERTY P380 PUMP WITH RECEIVER	1,3
CP-1	HW LOOP	1	7	1/8	115/1	TACO 006 STAINLESS	2,3

NOTES:
1. FOR FLUIDS UP TO 180°F.
2. PROVIDE DIGITAL 7 DAY PROGRAMMABLE TIMER, SCHEDULE DETERMINED BY OWNER.
3. PROVIDE AS PART OF BID OPTION 4.
4. FOUR (4) REQUIRED.

GREASE INTERCEPTOR SCHEDULE (BID OPTION 4)

UNIT NO	FLOW GPM	INLET/ OUTLET	BASIS OF DESIGN
GI-1	20	3"/3"	CANPLAS ENDURA LO PRO
SERVES SINK S-2			

FAN SCHEDULE (BID OPTION 5)

UNIT NO	SERVES	CFM	ESP IN WC	DRIVE TYPE	FAN TYPE	FAN RPM	MAX INLET SONES	HP	VOLTS/ PHASE	BASIS OF DESIGN	ACCESSORIES	NOTES
EF-1	117 EXHIBITION AREA	1500	1/8	DIRECT	EXHAUST	1140	10	1/6	115/1	GREENHECK G-133-B	A,B,C,D	–
EF-2	117 EXHIBITION AREA	1500	1/8	DIRECT	EXHAUST	1140	10	1/6	115/1	GREENHECK G-133-B	A,B,C,D	–

ACCESSORIES:
A. 12" INSULATED ROOF CURB.
B. GRAVITY BACKDRAFT DAMPER.
C. GALVANIZED BIRD SCREEN.
D. FACTORY MOUNTED DISCONNECT SWITCH.

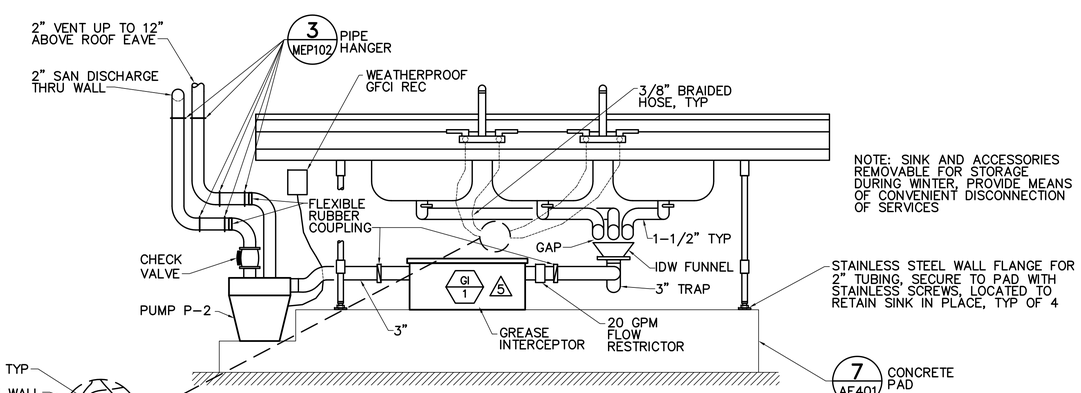

NOTE: SINK AND ACCESSORIES REMOVABLE FOR STORAGE DURING WINTER, PROVIDE MEANS OF CONVENIENT DISCONNECTION OF SERVICES

STAINLESS STEEL WALL FLANGE FOR 2" TUBING, SECURE TO PAD WITH STAINLESS SCREWS, LOCATED TO RETAIN SINK IN PLACE, TYP OF 4

5 MEP102 SINK S-2 DETAIL 4
NOT TO SCALE

NOTES

PROVIDE PADLOCK ON EACH BALL VALVE.

SEE 3/MEP101 FOR DETAIL OF INDOOR VALVES.

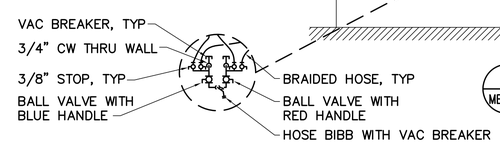

DETAIL AT WATER SUPPLY TO S-2

GRAPHIC SCALE
1/8"=1'-0"
8' 4' 0 8' 16'
CHECK GRAPHIC SCALE BEFORE USING

22 May, 2015 – 2:02pm
C:\dfile\21501.01-MEP102.dwg

OAK POINT ASSOCIATES
ARCHITECTURE ■ ENGINEERING ■ PLANNING
231 Main Street, Biddeford, Maine 04005 (T) 207.283.0193 (F) 207.283.4283
www.oakpoint.com

COMMONWEALTH OF MASSACHUSETTS JASON W. CHENARD No. 48543 REGISTERED PROFESSIONAL ENGINEER

DESIGNED BY: ARB/DCL
DRAWN BY: RDA
CHECKED BY: JWC
PROJECT: 21501.01

THE STATE OF MAINE BUILDING AT THE EASTERN STATES EXPOSITION
1305 MEMORIAL DRIVE
WEST SPRINGFIELD, MASSACHUSETTS

MAINE STATE BUILDING REPAIRS
MASSACHUSETTS EASTERN STATES "BIG E"

SANITARY, MECHANICAL AND ELECTRICAL PLAN

COMMONWEALTH OF MASSACHUSETTS DALE C. LINCOLN, II ELECTRICAL No. 48897 REGISTERED PROFESSIONAL ENGINEER 5/22/15

SCALE: AS NOTED
DATE: 05-26-15
DWG.: MEP102
SHEET: 14 OF 14