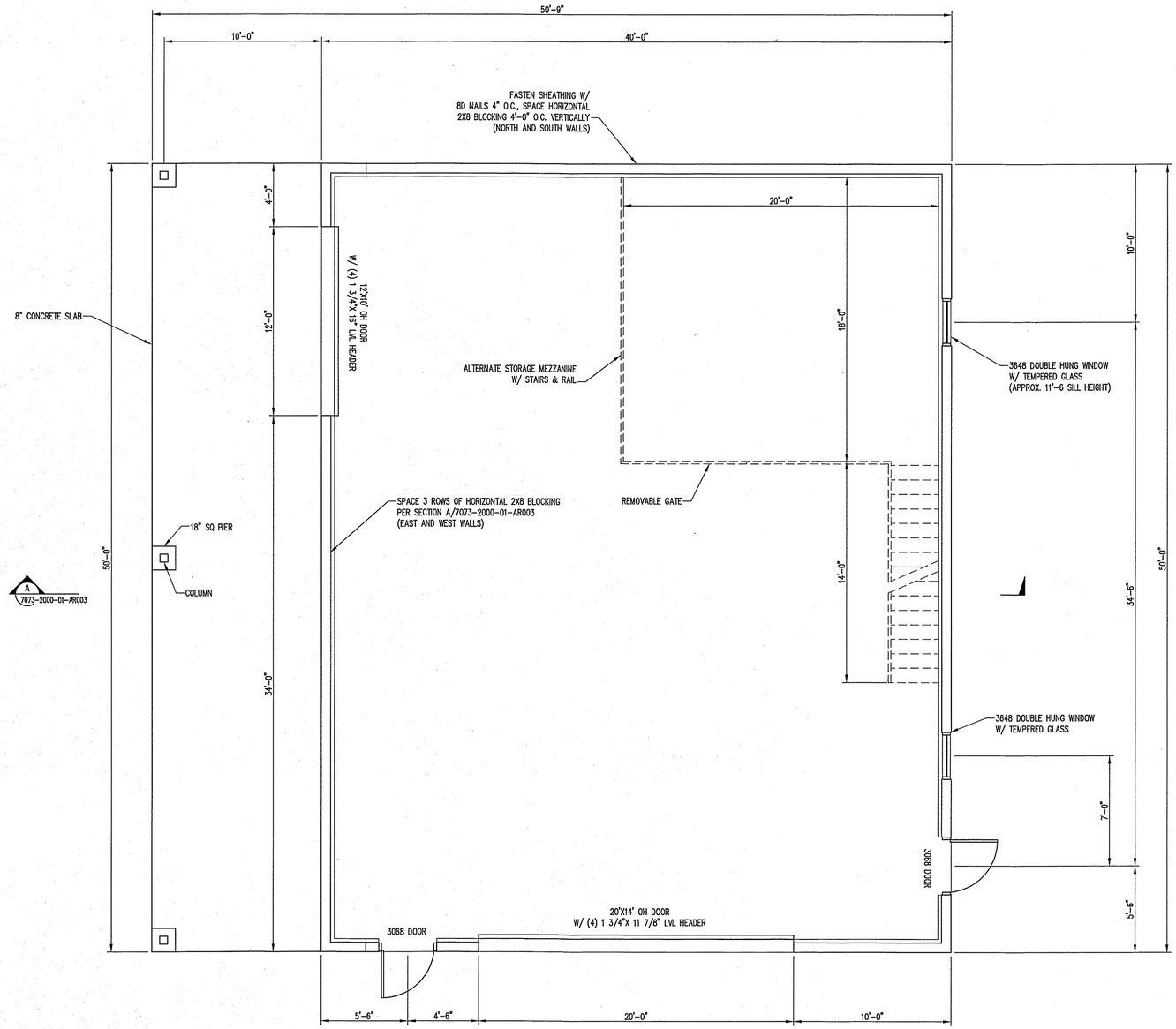

PLAN VIEW
SCALE: 1/4"= 1'-0"

N

DESIGN NOTES:
GROUND SNOW LOAD 100 PSF
WIND LOAD 90 MPH
WIND EXPOSURE "C"
SEISMIC CLASS "D"
BUILDING IS UNHEATED STORAGE
DESIGNED TO MEET THE 2009 IBC

NOTES:
- 12'X10' AND 20'X14' OVERHEAD DOORS AS SOLD BY OVERHEAD DOOR COMPANY, SERIES 592, INSULATED W/ ELECTRIC OPERATORS, 2" FULL FLOATING BEARING ROLLERS W/ HARDENED STEEL RACERS. (OR EQUAL)
- (2) 3'-0"X 6'-8" THERMA-TRU SE100 (STEEL, FLUSH) DOOR W/ PANIC HARDWARE & DOOR CLOSER. (OR EQUAL)
- (2) MATHEWS BROTHERS, SPENCER WALCOTT 3648 VINYL DOUBLE HUNG WINDOWS W/ TEMPERED GLASS AND STD HARDWARE. (OR EQUAL)
- SIDING & ROOFING TO BE EVERLAST II, 29 GAUGE, 38" WIDE W/ 1" OVERLAP. (OR EQUAL)
- COLORS TO BE DETERMINED

STATE OF MAINE
RICHARD SAUCIER, JR.
No. 12635
LICENSED
PROFESSIONAL ENGINEER
6/6/16

NOT FOR CONSTRUCTION

ISSUED FOR BIDS

NO.	DATE	BY	DESCRIPTION
C	04/04/16	MKL	ISSUED FOR BIDS

CURRENT REVISION

MID-SOUTH ENGINEERING
1658 Malvern Ave.
Hot Springs, Arkansas 71901
200 Mackenan Drive
Cary, North Carolina 27511
70 Spring Street, Suite 3
Millinocket, Maine 04462
WWW. MSECO.COM

RECEIVING & STORAGE
OVERALL AREA
ARCHITECTURAL BUILDING
STORAGE BUILDING FLOOR PLAN

BUREAU OF PARKS & LANDS
45 RADAR ROAD ASHLAND

STATE: ME

SCALE				DRAWING NO.
1/4" = 1' - 0"	DRN.	SMG	02/29/2016	7073-2000-01-AR001
	CKD.	RS	02/29/2016	
	APP.	RS	02/29/2016	

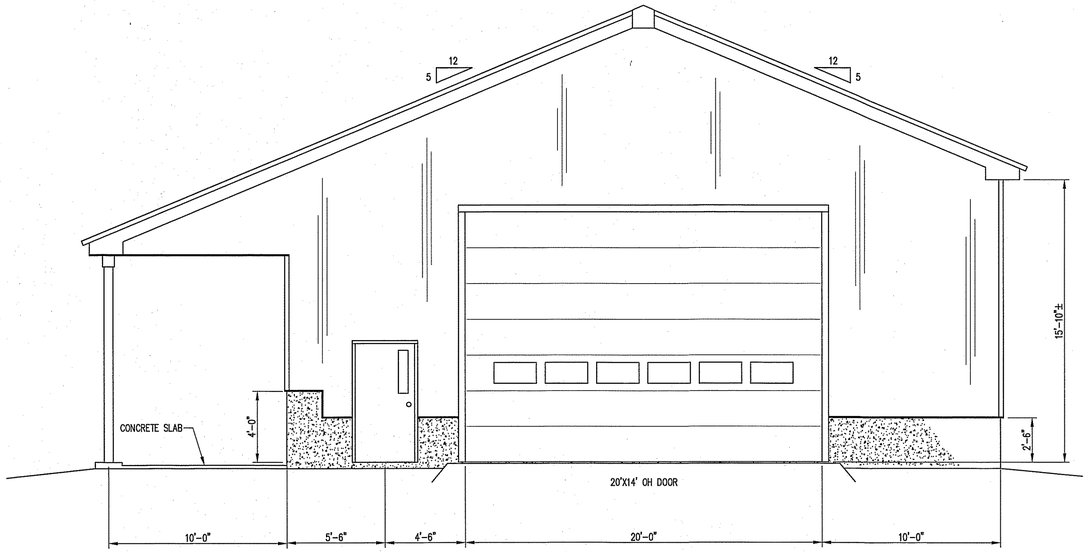

SOUTH ELEVATION
SCALE: 1/4"= 1'-0"

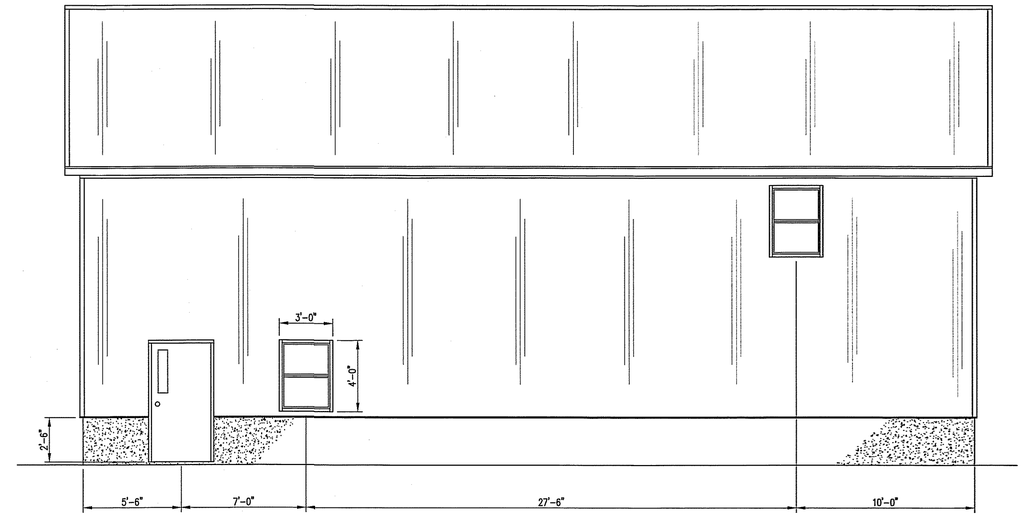

EAST ELEVATION
SCALE: 1/4"= 1'-0"

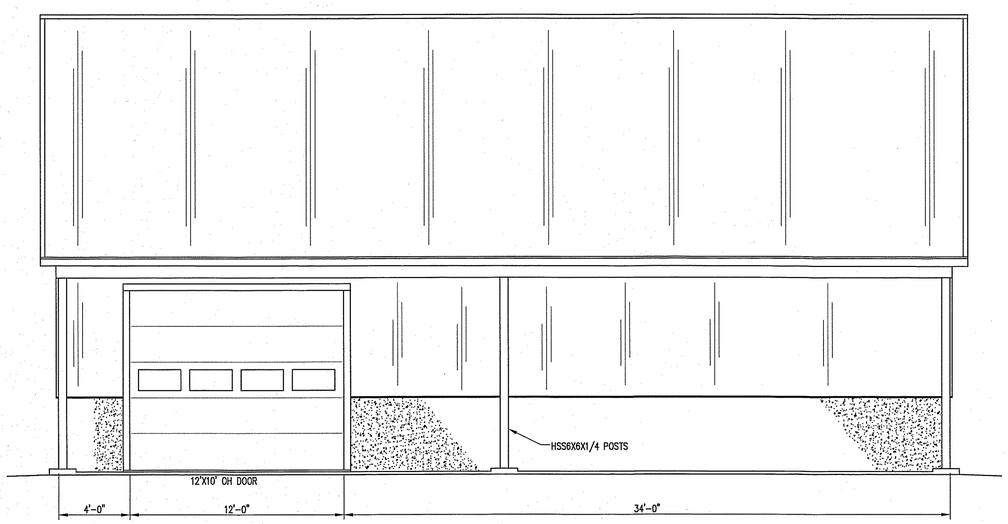

SOUTH ELEVATION
SCALE: 1/4"= 1'-0"

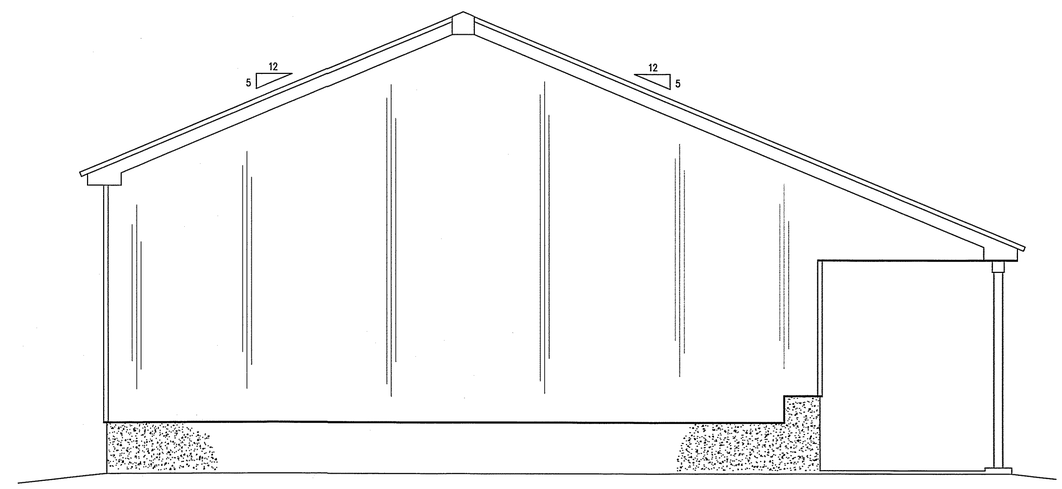

NORTH ELEVATION
SCALE: 1/4"= 1'-0"

STATE OF MAINE
RICHARD J. SALCEDOR JR.
No. 12835
LICENSED
PROFESSIONAL ENGINEER
4/6/16

NOT FOR CONSTRUCTION

ISSUED FOR BIDS

NO.	DATE	BY	DESCRIPTION
C	04/04/16	MKL	ISSUED FOR BIDS

CURRENT REVISION

MID-SOUTH ENGINEERING

1658 Malvern Ave.
Hot Springs, Arkansas 71901
200 Mackenan Drive
Cary, North Carolina 27511
70 Spring Street, Suite 3
Millinocket, Maine 04462
WWW. MSECO.COM

RECEIVING & STORAGE
OVERALL AREA
ARCHITECTURAL BUILDING
STORAGE BUILDING ELEVATIONS

BUREAU OF PARKS & LANDS
45 RADAR ROAD ASHLAND

STATE: ME

SCALE				DRAWING NO.
1/4" = 1' - 0"	DRN.	SMG	02/29/2016	7073-2000-01-AR002
	CKD.	RS	02/29/2016	
	APP.	RS	02/29/2016	

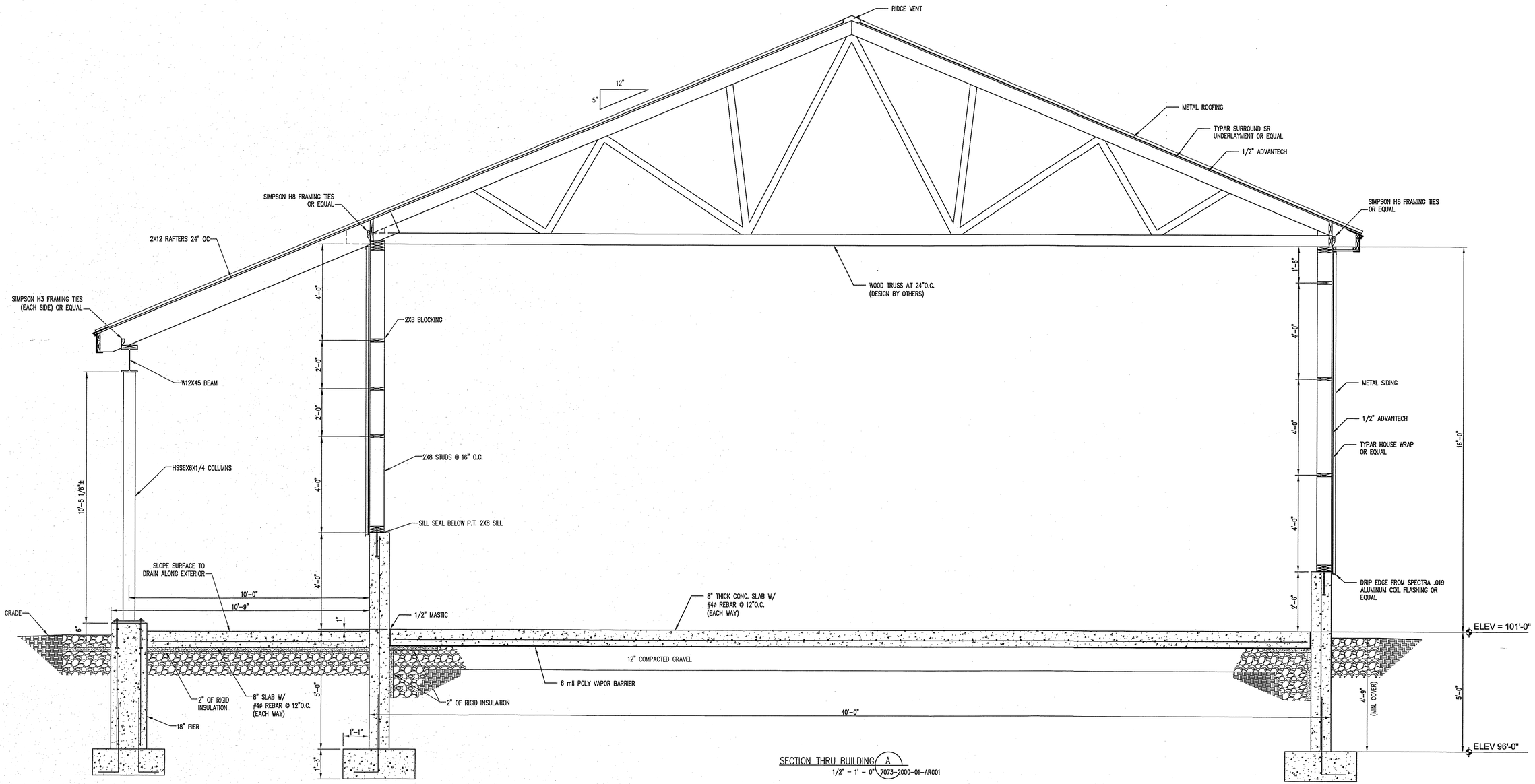

SECTION THRU BUILDING A
1/2" = 1' - 0" 7073-2000-01-AR001

STATE OF MAINE
RICHARD SAUCIER JR.
No. 12835
LICENSED
PROFESSIONAL ENGINEER
4/6/16

NOT FOR CONSTRUCTION

ISSUED FOR BIDS

NO.	DATE	BY	DESCRIPTION
C	04/04/16	MKL	ISSUED FOR BIDS

CURRENT REVISION

MID-SOUTH ENGINEERING
1658 Malvern Ave.
Hot Springs, Arkansas 71901
200 Mackenan Drive
Cary, North Carolina 27511
70 Spring Street, Suite 3
Millinocket, Maine 04462
WWW. MSECO.COM

RECEIVING & STORAGE
OVERALL AREA
ARCHITECTURAL BUILDING
STORAGE BUILDING SECTION

BUREAU OF PARKS & LANDS
45 RADAR ROAD ASHLAND

STATE: ME

SCALE				DRAWING NO.
AS NOTED	DRN.	SMG	02/29/2016	7073-2000-01-AR003
	CKD.	RS	02/29/2016	
	APP.	RS	02/29/2016	

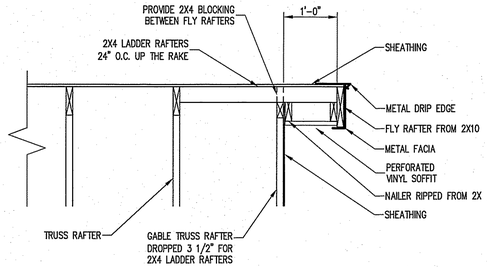

TYPICAL RAKE SECTION A
SCALE: 3/4"=1'-0" 7073-2000-01-AR001

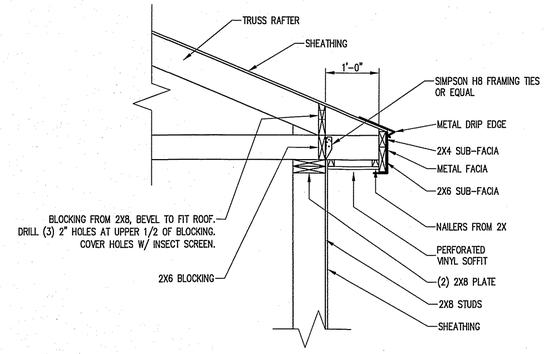

TYPICAL EAVE SECTION B
SCALE: 3/4"=1'-0" 7073-2000-01-AR001

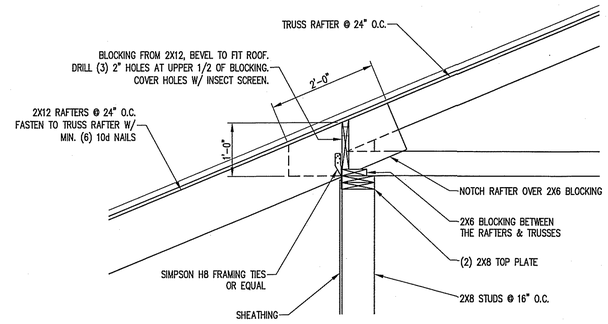

TYPICAL RAFTER TO TRUSS SECTION C
SCALE: 3/4"=1'-0" 7073-2000-01-AR001

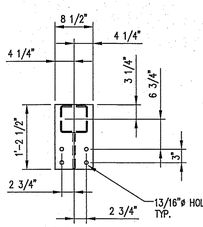

CAP PLATE AT END COLUMNS

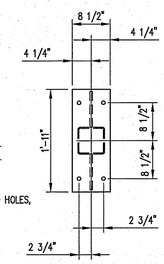

CAP PLATE AT CENTER COLUMN

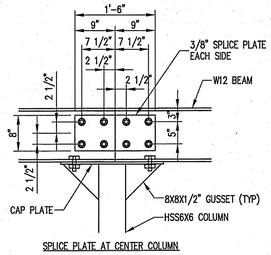

SPLICE PLATE AT CENTER COLUMN

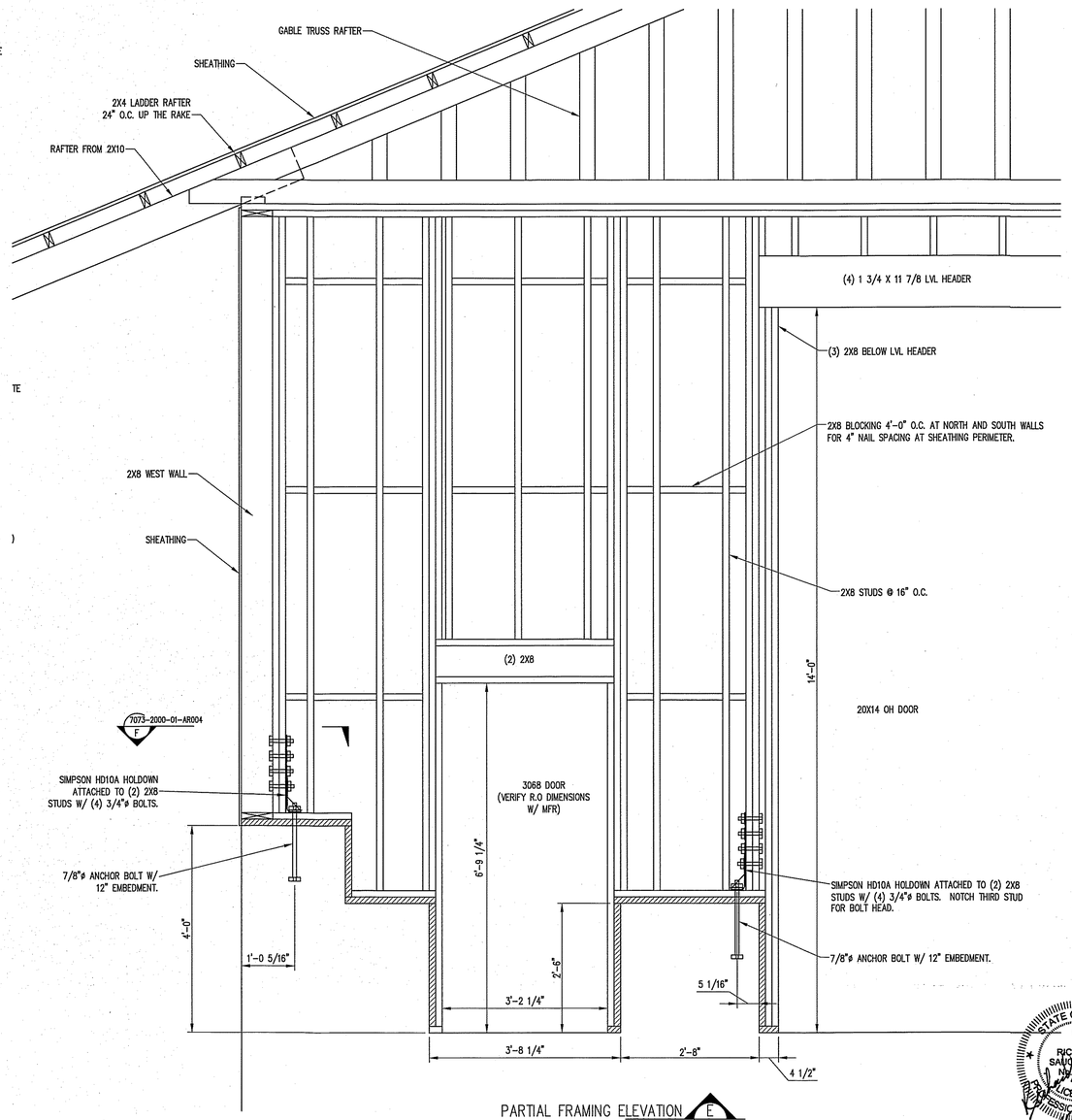

PARTIAL FRAMING ELEVATION E
SCALE: 3/4"=1'-0" 7073-2000-01-AR004

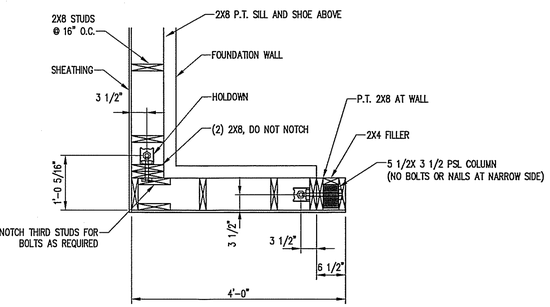

SECTION AT 12X8 OH DOOR G
SCALE: 3/4"=1'-0" 7073-2000-01-AR004

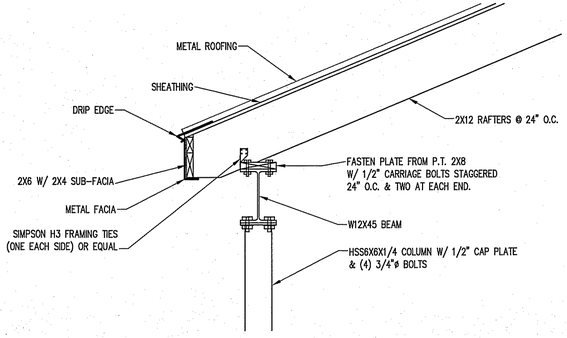

TYPICAL RAFTER TO BEAM SECTION D
SCALE: 3/4"=1'-0" 7073-2000-01-AR001

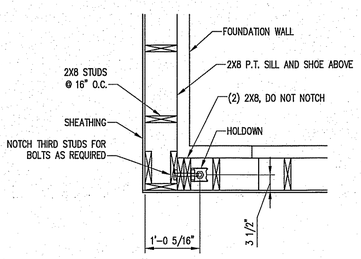

TYPICAL CORNER SECTION F
SCALE: 3/4"=1'-0" 7073-2000-01-AR004

STATE OF MAINE
RICHARD SAUCHELLI JR.
No. 10635
LICENSED
PROFESSIONAL ENGINEER
4/6/16

NOT FOR CONSTRUCTION

ISSUED FOR BIDS

NO.	DATE	BY	DESCRIPTION
C	04/04/2016	MKL	ISSUED FOR BIDS

CURRENT REVISION

MID-SOUTH ENGINEERING
1658 Malvern Ave.
Hot Springs, Arkansas 71901
200 Mackenan Drive
Cary, North Carolina 27511
70 Spring Street, Suite 3
Millinocket, Maine 04462
WWW. MSECO.COM

RECEIVING & STORAGE
OVERALL AREA
ARCHITECTURAL BUILDING
STORAGE BUILDING SECTIONS AND DETAILS

BUREAU OF PARKS & LANDS
45 RADAR ROAD ASHLAND
STATE: ME

SCALE				DRAWING NO.
AS NOTED	DRN.	SMG	02/29/2016	7073-2000-01-AR004
	CKD.	RS	02/29/2016	
	APP.	RS	02/29/2016	

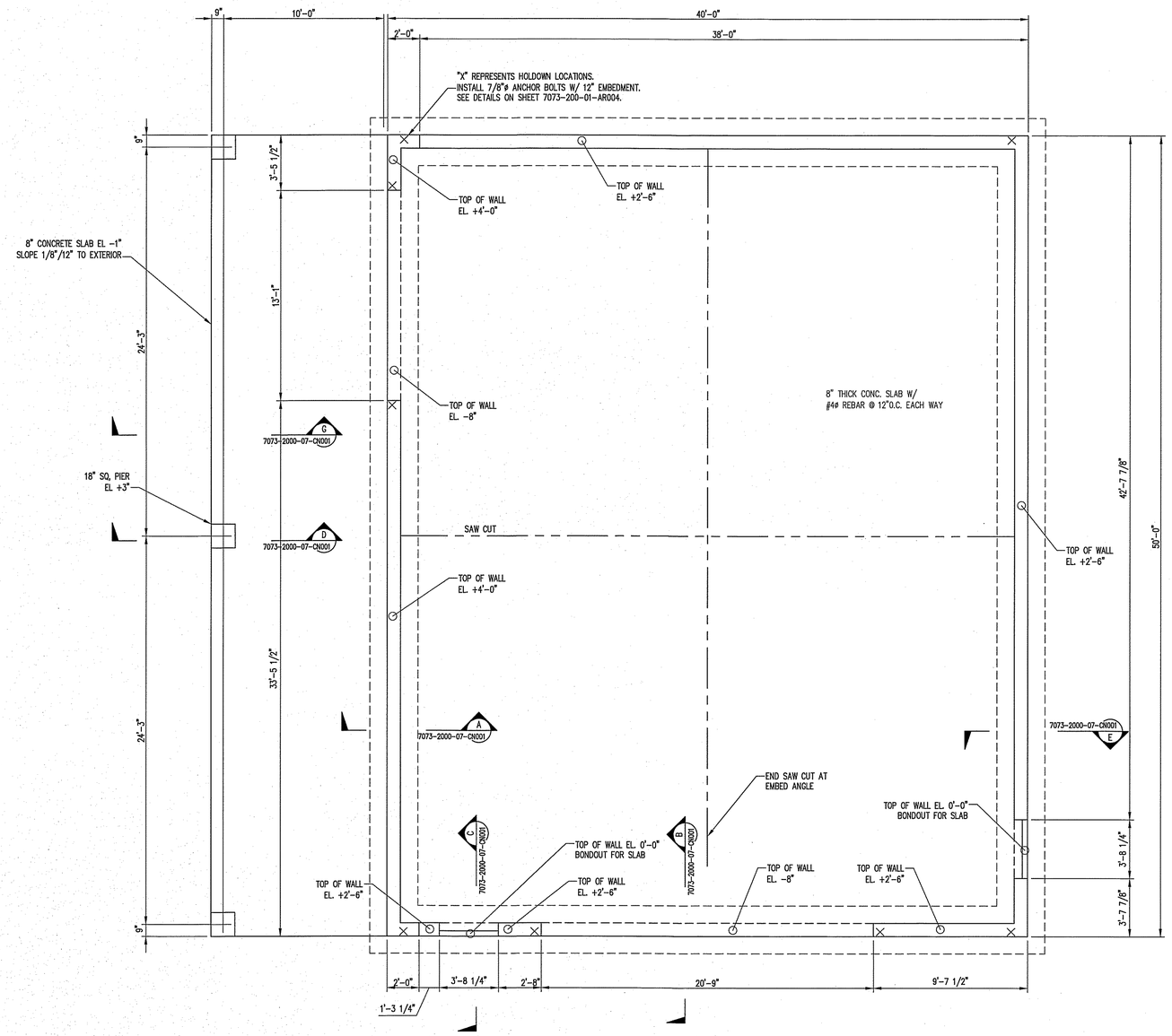

FOUNDATION PLAN

SCALE: 1/4"=1'-0"

ELEVATIONS REFERENCE FROM
TOP OF SLAB EL. = 101'-0"

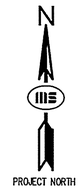

STATE OF MAINE
RICHARD SAUCIER, JR.
No. 12935
LICENSED
PROFESSIONAL ENGINEER
4/6/16

NOT FOR CONSTRUCTION

ISSUED FOR BIDS

NO.	DATE	BY	DESCRIPTION
C	04/04/16	MKL	ISSUED FOR BIDS

CURRENT REVISION

MID-SOUTH ENGINEERING
1658 Malvern Ave.
Hot Springs, Arkansas 71901
200 Mackenan Drive
Cary, North Carolina 27511
70 Spring Street, Suite 3
Millinocket, Maine 04462
WWW. MSECO.COM

RECEIVING & STORAGE
OVERALL AREA
CONCRETE LAYOUT
FOUNDATION PLAN

BUREAU OF PARKS & LANDS
45 RADAR ROAD ASHLAND

STATE: ME

SCALE	DRN.	SMG	02/29/2016	DRAWING NO.
1/4" = 1' - 0"	CKD.	RS.	02/29/2016	7073-2000-06-CN001
	APP.	RS	02/29/2016	

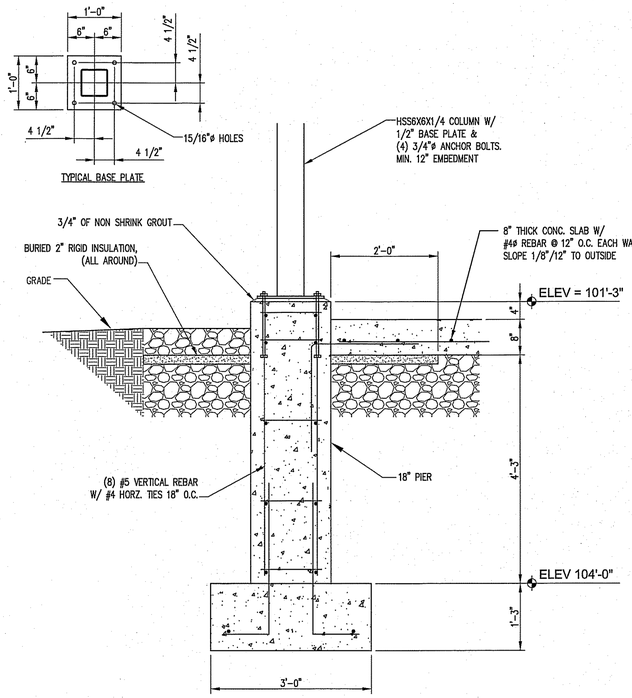

TYPICAL SECTION THRU PIER (D)
3/4" = 1' - 0" (7073-2000-06-CN001)

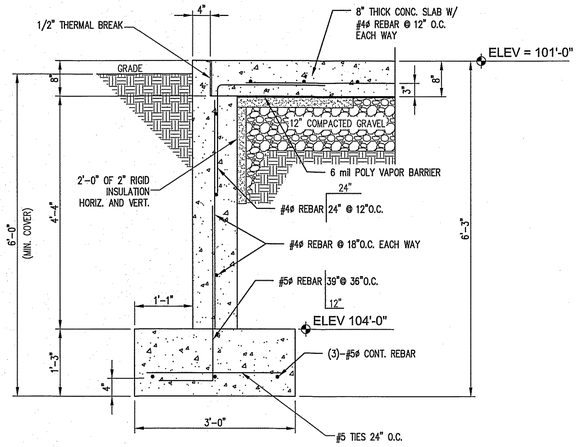

TYPICAL SECTION THRU THRESHOLD FOR PASS DOOR (C)
3/4" = 1' - 0" (7073-2000-06-CN001)

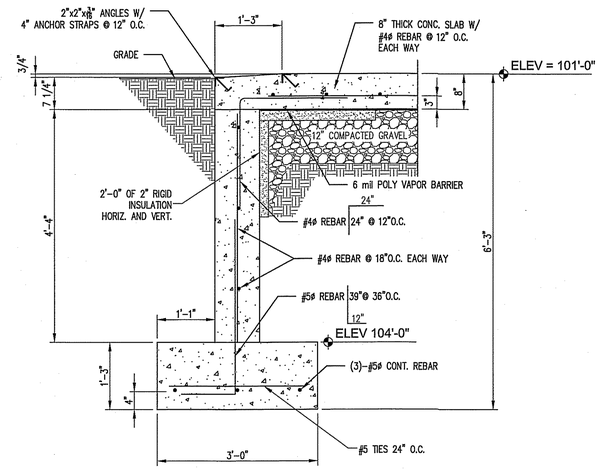

TYPICAL SECTION THRU THRESHOLD FOR O.H. DOOR (B)
3/4" = 1' - 0" (7073-2000-06-CN001)

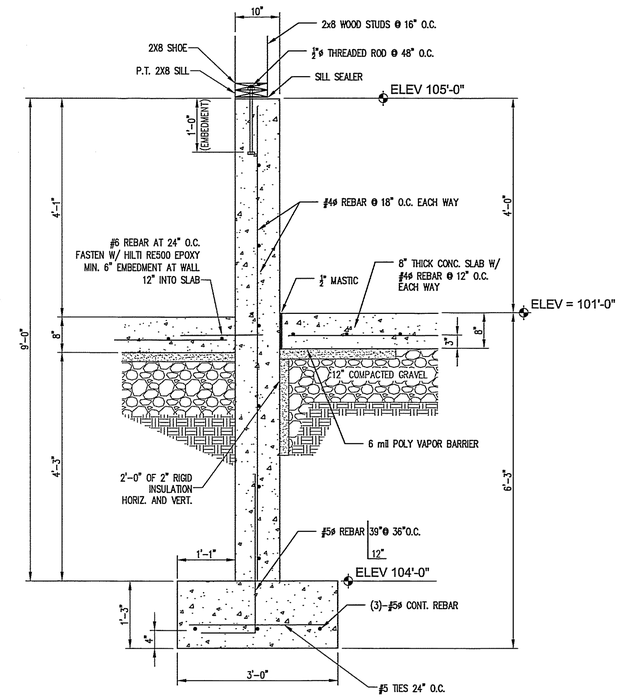

TYPICAL SECTION THRU FND. WALL (A)
3/4" = 1' - 0" (7073-2000-06-CN001)

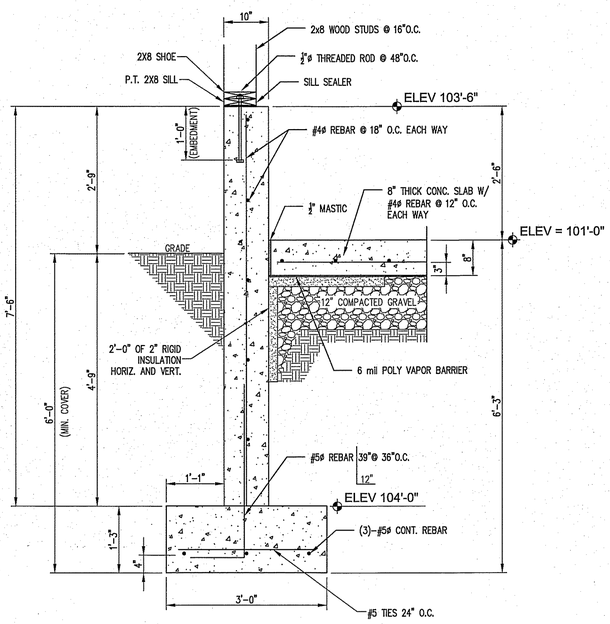

TYPICAL SECTION THRU FND. WALL (E)
3/4" = 1' - 0" (7073-2000-06-CN001)

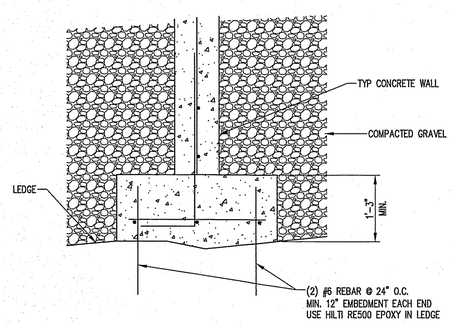

TYPICAL SECTION AT LEDGE (F)
3/4" = 1' - 0"

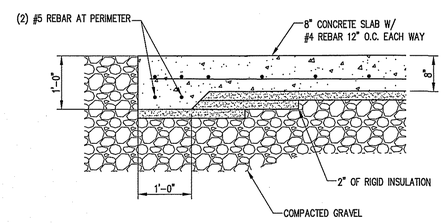

TYPICAL SECTION AT EDGE OF SLAB (G)
3/4" = 1' - 0" (7073-2000-06-CN001)

STATE OF MAINE
RICHARD L. SAUCIER JR.
No. 14635
LICENSED
PROFESSIONAL ENGINEER
4/6/16

NOT FOR CONSTRUCTION

ISSUED FOR BIDS

NO.	DATE	BY	DESCRIPTION
C	04/04/16	MKL	ISSUED FOR BIDS

CURRENT REVISION

MID-SOUTH ENGINEERING
1658 Malvern Ave.
Hot Springs, Arkansas 71901
200 Mackenan Drive
Cary, North Carolina 27511
70 Spring Street, Suite 3
Millinocket, Maine 04462
WWW. MSECO.COM

RECEIVING & STORAGE
OVERALL AREA
CONCRETE SECTIONS & DETAILS
FOUNDATION SECTIONS & DETAILS

BUREAU OF PARKS & LANDS
45 RADAR ROAD ASHLAND

STATE: ME

SCALE				DRAWING NO.
3/4" = 1' - 0"	DRN.	SMG	02/29/2016	7073-2000-07-CN001
	CKD.	RS	02/29/2016	
	APP.	RS	02/29/2016	

GENERAL NOTES

1. THE STRUCTURAL DRAWINGS AND SPECIFICATIONS SHALL BE USED IN CONJUNCTION WITH THE DRAWINGS AND SPECIFICATIONS OF ALL OTHER DISCIPLINES AND THE SHOP DRAWINGS. THE CONTRACTOR SHALL BE RESPONSIBLE FOR COORDINATING THE LOCATION AND INSTALLATION OF ALL SLEEVES, INSERTS, HANGERS, EMBEDMENTS OR OTHER ITEMS TO BE PLACED IN THE STRUCTURAL WORK.
2. THE CONTRACTOR SHALL VERIFY ALL DIMENSIONS AND SITE CONDITIONS PRIOR TO THE START OF WORK. ANY DISCREPANCIES SHALL BE BROUGHT TO THE ATTENTION OF THE ENGINEER.
3. ALL STRUCTURES ARE DESIGNED TO BE STABLE AND SELF SUPPORTING AT THE COMPLETION OF CONSTRUCTION. TEMPORARY BRACES, GUYS, TIE-DOWNS, SHORING, ETC. DURING CONSTRUCTION SHALL BE THE RESPONSIBILITY OF THE CONTRACTOR.
4. UNDERGROUND UTILITIES HAVE BEEN LOCATED TO THE EXTENT KNOWN. THE CONTRACTOR SHALL PROCEED WITH CAUTION DURING EXCAVATION ACTIVITIES.
5. SHOP DRAWINGS AND OTHER ITEMS SHALL BE SUBMITTED TO THE ENGINEER FOR REVIEW PRIOR TO FABRICATION. THE CONTRACTOR SHALL STAMP ALL DRAWINGS INDICATING THAT THE CONTRACTOR HAS REVIEWED THE DRAWINGS FOR CONTRACT COMPLIANCE PRIOR TO SUBMITTAL TO THE ENGINEER. SHOP DRAWINGS SUBMITTED WITHOUT THE CONTRACTOR'S STAMP MAY BE CAUSE FOR REJECTION. THE ENGINEER'S REVIEW IS FOR GENERAL COMPLIANCE WITH THE CONTRACT DOCUMENTS AND DOES NOT IMPLY CORRECTNESS OF DIMENSIONS OR DETAILS. THE ENGINEER'S REVIEW DOES NOT RELIEVE THE CONTRACTOR FROM THE REQUIREMENTS OF THE CONTRACT DOCUMENTS AND SPECIFICATIONS. THE CONTRACTOR REMAINS SOLELY RESPONSIBLE FOR ERRORS AND OMISSIONS ASSOCIATED WITH THE PREPARATION OF SHOP DRAWINGS.
6. SHOP DRAWINGS SHALL BE SUBMITTED TO THE ENGINEER ELECTRONICALLY IN EITHER AUTOCAD OR PDF FORMAT.
7. THE CONTRACTOR SHALL HAVE AND FOLLOW A COPY OF THE OWNERS STANDARD SPECIFICATIONS FOR MATERIAL, WORKMANSHIP AND CONSTRUCTION PROCEDURES NOT COVERED IN THESE NOTES.

FOUNDATION NOTES

1. DESIGN OF FOUNDATIONS IS BASED ON AN ALLOWABLE SOIL BEARING PRESSURE OF 2500 POUNDS PER SQUARE FOOT.
2. ALL DELETERIOUS MATERIALS FOUND WITHIN THE LIMITS OF THE STRUCTURE SHALL BE REMOVED AND REPLACED WITH COMPACTED SELECT FILL OR COMPACTED 3/4" STONE.
3. NO FOUNDATIONS SHALL BE PLACED ON FROZEN GROUND OR IN WATER.
4. FOUNDATION WALLS SHALL BE CURED FOR A MINIMUM OF 7 DAYS PRIOR TO BACKFILLING. THE BACKFILL MATERIAL SHALL BE BROUGHT UP TO GRADE EQUALLY ON BOTH SIDES OF FOUNDATION WALLS, WHERE REQUIRED.
5. BACKFILL MATERIAL SHALL BE PLACED IN MAXIMUM 8" LIFTS. EACH LIFT SHALL BE COMPACTED TO 95% OF THE MAXIMUM DRY DENSITY PER ASTM D-1557, MODIFIED PROCTOR TEST.
6. BACKFILL MATERIAL SHALL BE SCREENED OR CRUSHED GRAVEL OF HARD DURABLE PARTICLES FREE FROM VEGETABLE MATTER, LUMPS, BALLS OF CLAY AND OTHER DELETERIOUS SUBSTANCES. BACKFILL SOILS SHALL HAVE A PLASTICITY INDEX OF LESS OR EQUAL TO 6 AND A LIQUID LIMIT OF LESS THAN OR EQUAL TO 15. BACKFILL SOILS SHALL CONTAIN LESS THAN 5 PERCENT ORGANIC MATTER. BACK FILL SOILS SHALL AS A MINIMUM MEET THE FOLLOWING GRADATION:

SIEVE SIZE	PERCENT PASSING
3/8"	100
#4	80-100
#10	65-95
#40	25-55
#200	0-20

7. ON SITE MATERIALS GENERATED DURING EXCAVATION SHALL NOT BE USED AS BACKFILL MATERIAL.
8. FILTER FABRIC PLACED BENEATH FOUNDATIONS AND USED IN FRENCH DRAINS SHALL BE NONWOVEN GEOTEXTILE (MIRAFI 140N OR EQUAL).
9. CRUSHED AGGREGATE BASE COURSE (CABC) USED FOR ROADWAYS SHALL CONFORM TO THE FOLLOWING MDOT GRADATION REQUIREMENTS FOR 703.06 AGGREGATE FOR BASE AND SUBBASE, TYPE A.

SIEVE SIZE	PERCENT PASSING
1 1/2"	100
1/2"	45-75
1/4"	30-55
#40	0-20
#200	0-6.0

WOOD FRAMING NOTES

1. WOOD FRAMING TO BE SPF [SPRUCE/PINE/FIR] WITH MINIMUM PROPERTIES AS FOLLOWS:
   Fb = 875 PSI
   Fv = 135 PSI
   E = 1,400,000 PSI Min.
2. ALL TIMBER FRAMING SHALL BE IN ACCORDANCE WITH THE AITC TIMBER CONSTRUCTION MANUAL – LATEST EDITION, AND THE NATIONAL DESIGN SPECIFICATION FOR WOOD CONSTRUCTION (NDS), 2005 EDITION.
3. SAWN LUMBER FRAMING SHALL BE VISUALLY GRADED, NO. 2 OR BETTER, SPRUCE-PINE-FIR KILN DRIED TO 19 PERCENT MAXIMUM MOISTURE CONTENT UNLESS OTHERWISE INDICATED ON THE DRAWINGS.
4. LAMINATED VENEER LUMBER (LVL) SHALL BE AS SPECIFIED ON DRAWINGS AND AS MANUFACTURED BY GEORGIA PACIFIC CORPORATION (OR EQUAL). REFER TO MANUFACTURER'S LITERATURE FOR PROPER HANDLING AND INSTALLATION GUIDELINES.
5. PRESSURE TREATED LUMBER SHALL BE USED FOR MEMBERS EXPOSED TO WEATHER OR IN DIRECT CONTACT WITH SOIL, MASONRY OR CONCRETE, OR WHERE SHOWN ON THE DRAWINGS. PRESSURE TREATED LUMBER OR TIMBER SHALL BE SOUTHERN YELLOW PINE TREATED IN ACCORDANCE AWPA USE CATEGORY UC2.
6. ALL ADVANTECH SHEATHING SHALL BE APA PERFORMANCE RATED. PROVIDE 1/2" INCH THICK WALL SHEATHING AND 1/2" INCH THICK ROOF SHEATHING, MINIMUM. SHEATHING SHALL BE NAILED TO THE FRAMING AS FOLLOWS (UNO):
   ROOFS: 8D NAILS AT 4" ON CENTER AT EDGES AND 6" ON CENTER AT INTERMEDIATE SUPPORTS.
   WALLS: 8D NAILS AT 6" ON CENTER AT EDGES AND 6" ON CENTER AT INTERMEDIATE SUPPORTS.
   SHEAR WALLS: 8D NAILS AT 4" ON CENTER AT EDGES AND INTERMEDIATE SUPPORTS.
   ALL WALL STUDS SHALL BE BLOCKED AT 2', 4', 8', 10'.
7. TRUSS MANUFACTURER TO SUPPLY TRUSSES TO MEET REQUIREMENTS FOR SNOW LOADING IN ASHLAND, MAINE. THESE DRAWINGS TO BE SEALED BY A MAINE LICENSED PROFESSIONAL ENGINEER. TRUSS DRAWINGS TO BE ISSUED TO THE ENGINEER FOR APPROVAL PRIOR TO FABRICATION.
9. ALL BUILT UP BEAMS AND COLUMNS SHALL BE NAILED AS FOLLOWS, MIN.:
   BEAMS: 2-10D NAILS AT 12" ON CENTER IN EACH PIECE
   COLUMNS: 10D NAILS AT 12" ON CENTER
   LVL'S: PER MANUFACTURER'S RECOMMENDATIONS
10. FASTENING NOT SPECIFIED SHALL CONFORM TO THE 2009 IBC TABLE 2304.9.1.
11. ALL FLUSH FRAMING SHALL BE SUPPORTED USING METAL JOIST HANGERS, BEAM HANGERS, POST BASES, AND CAP PLATES AS MANUFACTURED BY SIMPSON STRONG-TIE CO., INC., OR APPROVED OTHER. REFER TO MANUFACTURER'S LITERATURE FOR PROPER HANDLING AND INSTALLATION GUIDELINES.

CONCRETE NOTES:

1. ALL CONCRETE MATERIALS AND WORKMANSHIP SHALL CONFORM TO THE LATEST EDITIONS OF ACI 318 AND ACI 301.
2. ALL 3000 PSI CONCRETE SHALL BE AS FOLLOWS UNLESS NOTED OTHERWISE:
   2.1. MINIMUM COMPRESSIVE STRENGTH: 3000 PSI @ 28 DAYS
   2.2. CEMENT: ASTM C150 TYPE 2
   2.3. AGGREGATE: ASTM C33 OR C330
   2.4. MAXIMUM AGGREGATE SIZE: 1 INCH
   2.5. MAXIMUM WATER-CEMENT RATIO: 0.45
   2.6. SLUMP: 2 TO 4 INCHES
   2.7. AIR ENTRAINMENT: ASTM C260, 4 TO 6 PERCENT
   2.8. WATER REDUCING ADMIXTURE: ASTM C494
   2.81 ADMIXTURES SHALL BE USED IN ACCORDANCE WITH ACI AND THE MANUFACTURERS RECOMMENDATIONS.
   2.82 USE OF CALCIUM CHLORIDE, CHLORIDE IONS OR OTHER SALTS IS NOT PERMITTED.
3. REINFORCING BARS SHALL CONFORM TO ASTM A615, GRADE 60, DEFORMED BARS. REINFORCING BARS ARE NOT TO BE WELDED.
4. JOINT MATERIAL FOR EXTERIOR WALLS AND INTERIOR SLABS NOT EXPOSED TO VEHICULAR TRAFFIC SHALL BE A PREMIUM GRADE, HIGH PERFORMANCE 1 COMPONENT, POLYURETHANE BASED, NON-SAG ELASTOMERIC SEALANT WITH A TOOLED SURFACE.
5. GROUT SHALL BE A NON-SHRINK, NON-METALLIC TYPE WITH A MINIMUM COMPRESSIVE STRENGTH OF 7000 PSI AT 28 DAYS.
6. PROVIDE ALL NECESSARY CHAIRS, CHAIR BARS, SPACERS, ETC., WIRED SECURELY TO HOLD REINFORCEMENT IN POSITION. THESE ACCESSORIES SHALL BE PLASTIC BOOTED WHERE CONCRETE IS TO BE EXPOSED TO WEATHER OR MOISTURE.
7. CONCRETE COVER TO REINFORCING STEEL SHALL CONFORM TO ACI 318 AS FOLLOWS:
   7.1. CONCRETE CAST AGAINST EARTH: 3"
   7.2. CONCRTE EXPOSED TO WATER FLOW 3"
   7.3. CONCRETE EXPOSED TO EARTH OR WEATHER: #3 THRU #5 1 1/2"; #6 THRU #11 2"
   7.4. CONCRETE NOT EXPOSED TO WEATHER OR PLACED IN CONTACT WITH GROUND: SLABS/WALLS 3/4"; BEAMS/COLUMNS 1 1/2"
8. REINFORCING BARS SHALL BE PLACED IN ACCORDANCE WITH THE LATEST EDITION OF THE CRSI "RECOMMENDED PRACTICE FOR PLACING REINFORCING BARS".
9. ALL LAP SPLICES SHALL BE ACI CLASS B SPLICES. THE FOLLOWING TABLES ARE BASED ON NORMAL WEIGHT CONCRETE WITH BARS 4 BAR DIAMETERS OR MORE APART AND CONCRETE COVER EQUAL TO 2 BAR DIAMETERS OR MORE (CATEGORY 5). TOP BARS ARE DEFINED AS HORIZONTAL BARS WITH MORE THAN 12 INCHES OF CONCRETE PLACED BELOW THE REINFORCEMENT.

3000 PSI CONCRETE									fy = 60,000 PSI
BAR SIZE	#3	#4	#5	#6	#7	#8	#9	#10	#11
LAP (IN) – TOP BARS	18	24	30	36	42	51	64	82	100
LAP (IN) – OTHER BARS	16	19	23	28	33	39	50	63	77

10. WELDING SHALL ONLY BE ALLOWED IF SPECIFICALLY SHOWN ON DRAWINGS OR APPROVED IN ADVANCE BY ENGINEER OF RECORD.
11. ALL OUTSIDE CONCRETE WEARING SURFACES SHALL RECEIVE A STEEL TROWEL AND A MEDIUM BROOM FINISH PERPENDICULAR TO THE TRAFFIC FLOW.
12. ALL INSIDE CONCRETE WEARING SURFACES SHALL RECEIVE A SMOOTH STEEL TROWEL FINISH.
13. PROVIDE A 3/4" CHAMFER TO ALL EXPOSED CONCRETE EDGES.
14. WET CURE ALL CONCRETE SLABS FOR A MINIMUM OF 3 DAYS.
15. CONTRACTOR SHALL COORDINATE LOCATIONS OF ALL FLOOR DRAINS, CONDUITS, PIPING, SLEEVES, INSERTS, GROUNDS, ETC WITH CONCRETE CONSTRUCTION.
16. DO NOT PENETRATE BEAMS WHERE NOT SHOWN ON THE STRUCTURAL DRAWINGS WITHOUT APPROVAL OF THE ENGINEER.
17. THE CONTRACTOR SHALL PROVIDE THE FOLLOWING INFORMATION TO THE STRUCTURAL ENGINEER OF RECORD FOR REVIEW:
   17.1. CONCRETE MIX DESIGNS INCLUDING ALL PROPOSED ADMIXTURES WITH THEIR DOSAGE RATES AND PAST COMPRESSION TEST RESULTS SHOWING THAT THE PROPOSED MIX MEETS OR EXCEEDS THE PROJECT REQUIREMENTS.
   17.2. PROPOSED LOCATION OF ALL CONSTRUCTION AND CONTROL JOINTS NOT SHOWN ON THE PLANS PRIOR TO THE START OF CONSTRUCTION.
   17.3. SHOP DRAWINGS SHOWING LOCATIONS, DIMENSIONS AND BENDS FOR REBAR.

STRUCTURAL STEEL NOTES

1. ALL STRUCTURAL STEEL MATERIALS AND WORKMANSHIP SHALL CONFORM TO THE AMERICAN INSTITUTE OF STEEL CONSTRUCTION'S "SPECIFICATION FOR STRUCTURAL STEEL BUILDINGS" AND THE "AISC CODE OF STANDARD PRACTICE."
2. WELDING SHALL BE IN ACCORDANCE WITH AWS D1.1, LATEST EDITION. WELDING ELECTRODES SHALL BE E70XX.
3. ALL STRUCTURAL STEEL SHAPES AND PLATES SHALL CONFORM TO THE FOLLOWING:
   3.1. W AND WT SHAPES ASTM A992
   3.2. SHAPES, CHANNEL, ANGLE & PLATE ASTM A36
   3.3. HOLLOW STRUCTURAL SECTIONS ASTM A500, GRADE B
4. BOLTED CONNECTIONS SHALL BE MADE WITH MINIMUM 3/4" DIAMETER ASTM A325N HIGH STRENGTH BOLTS.
5. SHOP CONNECTIONS MAY BE WELDED OR BOLTED. FIELD CONNECTIONS SHALL BE BOLTED UNLESS NOTED OTHERWISE.
6. THE DESIGN OF CONNECTIONS NOT SHOWN ON THE DRAWINGS SHALL BE BY THE FABRICATOR. IF BEAM REACTIONS ARE NOT SHOWN ON THE PLANS, THE CONNECTIONS SHALL BE DESIGNED FOR 50% OF THE TOTAL UNIFORM LOAD CAPACITY FOR THE MEMBER BASED ON ALLOWABLE STRESS DESIGN. IF AXIAL LOADS ARE NOT SHOWN ON THE PLANS FOR BRACING MEMBERS, THE END CONNECTIONS SHALL BE DESIGNED FOR 30% OF THE YIELD STRENGTH TIMES THE CROSS SECTIONAL AREA OF THE MEMBER. A MINIMUM OF 2 BOLTS SHALL BE USED FOR ANGLE MEMBERS AND 4 BOLTS SHALL BE USED FOR WT MEMBERS.
7. ANGLES USED FOR CONNECTIONS SHALL BE A MINIMUM OF 5/16" THICK. MINIMUM GUSSET PLATE THICKNESS SHALL BE 3/8".
8. ALL BOLTED CONNECTIONS SHALL HAVE A MINIMUM OF 2 BOLTS PER CONNECTION. HOLES FOR BOLTED CONNECTIONS SHALL BE DRILLED OR PUNCHED. SLOTTED HOLES SHALL BE PROVIDED WITH SMOOTH EDGES. BURNING OF HOLES IN THE FIELD IS NOT PERMITTED.
9. EXISTING STEEL SHALL BE CLEANED OF ALL PAINT, DIRT, GREASE, ETC. PRIOR TO WELDING ATTACHMENTS.
10. WORK POINTS FOR VERTICAL BRACING SHALL INTERSECT AT THE CENTERLINES OF THE BEAMS AND COLUMNS UNLESS OTHERWISE NOTED.
11. STEEL BEAMS AND COLUMNS SHALL BE CUT FROM FULL LENGTH STOCK. UNAUTHORIZED SPLICES WILL BE CAUSE FOR REJECTION.
12. ALL STRUCTURAL STEEL SHALL BE PAINTED AS FOLLOWS, UNLESS OTHERWISE NOTED:
   12.1. ALL STEEL SURFACES SHALL BE PREPARED BY MINIMUM POWER TOOL CLEANING IN ACCORDANCE WITH THE STEEL STRUCTURES PAINTING COUNCIL GUIDE SSPC-SP3
   12.2. WITHIN 8 HOURS OF CLEANING, APPLY 1 COAT OF SHERWIN-WILLIAMS PRO-CRYL UNIVERSAL PRIMER TO ACHIEVE A DRY FILM THICKNESS OF 3.0 TO 4.0 MILS.
   12.3. TOP COAT SHALL BE 1 COAT OF SHERWIN-WILLIAMS SPRAYLASTIC EXTERIOR WB DRYWALL ACRYLIC TO ACHIEVE A DRY FILM THICKNESS OF 5.0 MILS.
   12.4. FIELD TOUCH UP ALL ABRASIONS, BURNS AND OTHER SIMILAR DEFECTS IN THE PAINT, PER MANUFACTURER'S REQUIREMENTS.
13. FIELD PAINT ALL NEW AND EXISTING STRUCTURAL STEEL AT FIELD WELD LOCATIONS AND WHERE THE SHOP APPLIED COATING IS DAMAGED AS FOLLOWS:
   13.1. ALL STEEL SURFACES SHALL BE PREPARED BY POWER TOOL CLEANING TO BARE METAL IN ACCORDANCE WITH THE STEEL STRUCTURES PAINTING COUNCIL GUIDE SSPC-SP11.
   13.2. PRIMER COAT AND TOP COAT SHALL BE AS SPECIFIED ABOVE.
14. GRATING SHALL BE GALVANIZED STEEL WITH 1 1/4" x 3/16" BEARING BARS SPACED AT 13/16" ON CENTER CONFORMING TO THE REQUIREMENTS OF THE METAL BAR GRATING DIVISION OF THE NATIONAL ASSOCIATION OF ARCHITECTURAL METAL MANUFACTURERS. CROSS BARS SHALL BE WELDED AT RIGHT ANGLES TO THE BEARING BARS AT 4" ON CENTER. GRATING EDGES SHALL BE BANDED. GALVANIZED GRATING SHALL NOT BE REQUIRED UNLESS SPECIFICALLY NOTED.
15. HANDRAILS AND POSTS SHALL BE ASTM A53 TYPE E OR S, GRADE B, 1 1/2" NOMINAL PIPE SIZE. POSTS SHALL BE SCHEDULE 80 PIPE, HANDRAILS AND MIDRAILS SHALL BE SCHEDULE 40 PIPE. MAXIMUM POST SPACING SHALL BE 6'-0" ON CENTER UNLESS NOTED OTHERWISE AND SHALL BE COMPLETE WITH 1/4" x 4" HIGH TOE PLATE AT ALL PLATFORMS AND LANDINGS.
16. ALL GROUT UNDER COLUMN BASE PLATES AND BEAM BEARING PLATES IF REQUIRED SHALL BE NON-SHRINK, NON-METALLIC, 7000 PSI MINIMUM COMPRESSIVE STRENGTH GROUT.
17. THE CONTRACTOR SHALL SUBMIT THE FOLLOWING INFORMATION TO THE STRUCTURAL ENGINEER OF RECORD FOR REVIEW:
   17.1 SHOP DRAWINGS SHOWING LOCATIONS, DIMENSIONS AND ALL CONNECTION DETAILS FOR STRUCTURAL STEEL WORK.

STATE OF MAINE
RICHARD L. SAUCIER JR.
No. 12935
LICENSED
PROFESSIONAL ENGINEER
4/6/16

NOT FOR CONSTRUCTION

ISSUED FOR BIDS

NO.	DATE	BY	DESCRIPTION
B	04/04/16	MKL	ISSUED FOR BIDS

CURRENT REVISION

MID-SOUTH ENGINEERING
1658 Malvern Ave.
Hot Springs, Arkansas 71901
200 Mackenan Drive
Cary, North Carolina 27511
70 Spring Street, Suite 3
Millinocket, Maine 04462
WWW. MSECO.COM

RECEIVING & STORAGE
OVERALL AREA
CIVIL SYMBOLS, NOTES & DETAILS
GENERAL NOTES

BUREAU OF PARKS & LANDS
RADAR ROAD ASHLAND
STATE: ME

SCALE	DRN.	GJB	02/24/2016	DRAWING NO.
N/A	CKD.	RS	02/24/2016	7073-2000-00-CV001
	APP.	RS	02/24/2016	

NOT FOR CONSTRUCTION

ISSUED FOR BIDS

NO.	DATE	BY	DESCRIPTION
C	04/04/16	MKL	ISSUED FOR BIDS

CURRENT REVISION

MID-SOUTH ENGINEERING

1658 Malvern Ave.
Hot Springs, Arkansas 71901
200 Mackenan Drive
Cary, North Carolina 27511
70 Spring Street, Suite 3
Millinocket, Maine 04462
WWW. MSECO.COM

RECEIVING & STORAGE
OVERALL AREA
CIVIL SITE PLAN
STORAGE BUILDING LOCATION PLAN

BUREAU OF PARKS & LANDS
45 RADAR ROAD ASHLAND

STATE: ME

SCALE	DRN.	GJB	02/16/2016	DRAWING NO.
3/32" = 1' - 0"	CKD.	RS	02/16/2016	7073-2000-03-CV 001
	APP.	RS	02/16/2016	

GENERAL NOTES

1. ALL GENERAL NOTES, SYMBOL LISTS AND DETAILS SHALL BE CONSIDERED AS APPLICABLE TO ALL ELECTRICAL DRAWINGS FOR THIS PROJECT. SYMBOLS AND ABBREVIATIONS SHOWN ON THIS SHEET ARE FOR REFERENCE ONLY AND DO NOT INDICATE THEIR INCORPORATION IN THE DESIGN.
2. ALL WORK SHALL BE PERFORMED ON THIS CONTRACT SHALL BE DONE IN A NEAT AND WORKMANLIKE MANNER AND SHALL BE DONE IN ACCORDANCE WITH THE LATEST EDITION OF NFPA 70 NATIONAL ELECTRICAL CODE (NEC), OSHA AND ALL APPLICABLE STATE AND LOCAL CODES AND ORDINANCES.
3. THESE DRAWINGS ARE, IN GENERAL, MADE TO SCALE BUT ALL MEASUREMENTS SHALL BE TAKEN FROM FIGURED DIMENSIONS AND NOT FROM SCALING.
4. THE CONTRACTOR SHALL COORDINATE WITH ALL OTHER DISCIPLINES TO ENSURE THAT A PROPERLY TIMED EFFORT IS PROVIDED AS TO NOT AFFECT THE PROJECT SCHEDULE.
5. THE LOCATION OF ALL PROCESS EQUIPMENT, MOTORS, VALVES, INSTRUMENTS, LIGHTING FIXTURES, WIRING DEVICES, ETC. SHOWN ON THE DRAWINGS ARE FOR DIAGRAMMATICAL PURPOSES ONLY. THE CONTRACTOR SHALL FIELD VERIFY ALL LOCATIONS AND DIMENSIONS PRIOR TO ACTUAL INSTALLATION WORK.
6. ALL EQUIPMENT CONNECTIONS ARE SHOWN FOR BASIS-OF-DESIGN PRODUCTS. THE CONTRACTOR SHALL COORDINATE ALL EQUIPMENT CONNECTIONS – INCLUDING DISCONNECTING MEANS, OVERCURRENT PROTECTION, AND WIRE SIZING – WITH SELECTED MANUFACTURERS' RECOMMENDED INSTRUCTIONS, UNLESS NOTED OTHERWISE.
7. THE CONTRACTOR SHALL BE RESPONSIBLE FOR ALL CONDUIT, CABLE, TERMINATIONS AND APPURTENANCES ASSOCIATED WITH THE VENDOR PROVIDED EQUIPMENT NECESSARY FOR A COMPLETE AND FULLY FUNCTIONAL SYSTEM AS DESIGNED.
8. THE CONTRACTOR SHALL PROVIDE ALL MOUNTING HARDWARE NECESSARY FOR A COMPLETE INSTALLATION. MOUNT EQUIPMENT AND ROUTE CONDUIT SO AS NOT TO INTERFERE WITH OPERATIONS SUCH AS OVERHEAD DOORS, DOOR SWINGS, PROCESS EQUIPMENT, ETC.
9. ALL SLEEVES AND OTHER PENETRATIONS THROUGH FIRE RATED ASSEMBLIES SHALL BE SEALED AFTER CABLE INSTALLATION WITH AN APPROVED FIRE RATED COMPOUND.

GENERAL NOTES FOR GROUNDING PLANS

1. ALL GROUNDING SHOWN ON THE DRAWINGS IS DIAGRAMMATIC. THE CONTRACTOR SHALL COORDINATE THE INSTALLATION OF GROUND RODS, BURIED GROUNDING CONDUCTORS AND ABOVE GRADE GROUNDING RISERS WITH THE OTHER TRADES. THE CONTRACTOR SHALL VERIFY EXACT LOCATIONS OF THE EQUIPMENT IN THE FIELD WITH THE OTHER TRADES TO PREVENT INTERFERENCES AND DAMAGE TO THE INSTALLATION.
2. THE GROUNDING CONDUCTORS FOR ABOVE AND BELOW GRADE INSTALLATION SHALL BE ANNEALED, BARE, STRANDED COPPER WIRE CONFORMING TO ASTM SPECIFICATION B8, AS SHOWN ON THE DRAWINGS. THE ABOVE GRADE CONDUCTORS SHALL BE 4/0 AWG UNLESS NOTED OTHERWISE.
3. THE GROUNDING CONDUCTORS FOR BELOW GRADE INSTALLATION SHALL HAVE A MINIMUM OF 1'-6" COVER BELOW FINISHED GRADE. THE BELOW GRADE GROUNDING CONDUCTORS SHALL NOT PENETRATE THE WALLS OR FLOOR OF CONTINENT AREAS. THE GROUNDING CONDUCTORS SHALL BE INSTALLED IN PVC CONDUIT WHERE CABLES PENETRATES FLOOR SLABS, FOUNDATIONS, EQUIPMENT SLABS, PAVING OR WHERE RUN LENGTHS EXCEED 3'-0" ABOVE GROUND. BARE COPPER CONDUCTORS SHALL BE RUN IN PVC CONDUIT WHERE WHERE INCASED IN CONCRETE.
4. THE GROUND RODS SHALL BE 3/4" DIAMETER x 10' LONG COPPER CLAD STEEL. THE TOPS OF ALL GROUND RODS SHALL BE DRIVEN TO A DEPTH OF 1'-6" BELOW FINISHED GRADE.
5. BOND THE WATER PIPING TO THE GROUND GRID PER THE REQUIREMENTS OF THE LATEST EDITION OF THE NEC. BOND TO A 20' PIECE OF REBAR WITHIN THE FOUNDATION PER THE NEC.
4. ALL PARTS OF THE GROUNDING SYSTEM SHALL BE PROTECTED AGAINST MECHANICAL DAMAGE DURING THE CONSTRUCTION PERIOD.
5. THE GROUNDING CONDUCTORS TO THE DISTRIBUTION PANELS AND TRANSFORMERS SHALL BE #6 BARE COPPER CONDUCTOR UNLESS NOTED OTHERWISE. INSTALL ONE GROUNDING CONDUCTOR FOR THE PANEL AND ONE FOR THE TRANSFORMER.
6. THE GROUNDING CONDUCTORS TO THE VARIOUS CONTROL PANELS SHALL BE #6 BARE COPPER CONDUCTOR UNLESS NOTED OTHERWISE. RISERS FOR ISOLATED GROUNDS (IG) SHALL BE MADE WITH 4/0 AWG GREEN INSULATED STRANDED COPPER CONDUCTOR UNLESS OTHER NOTED OTHERWISE.
7. A MINIMUM OF 15'-0" OF CABLE SHALL BE INSTALLED ABOVE FINISHED GRADE AT EACH PIGTAIL OR EQUIPMENT LOCATION UNLESS NOTED OTHERWISE. THE CABLE SHALL BE CUT AT THE TIME OF CONNECTION.
8. THE TIE-IN TO THE EXISTING GROUND GRID SHALL BE DONE IN SUCH A MANNER AS TO NOT DISTURB THE EXISTING GROUND GRID. THE CONTRACTOR SHALL REPAIR ANY EXISTING GROUNDING CONDUCTOR THAT IS BROKEN DURING CONSTRUCTION. BOND THE NEW WORK TO ANY EXISTING GROUNDING CONDUCTORS UNCOVERED DURING CONSTRUCTION.

ELECTRICAL LINETYPES

—— OHE ——— OHE ——	OVERHEAD ELECTRICAL LINE
—— UGE ——— UGE ——	UNDERGROUND ELECTRICAL LINE
—— AGC ——— AGC ——	ABOVE GROUND GROUNDING CONDUCTOR 4/0 AWG BARE SOFT DRAWN STRANDED COPPER CONDUCTOR, UNLESS NOTED OTHERWISE. RUN EXPOSED,
—— UGC ——— UGC ——	UNDERGROUND GROUNDING CONDUCTOR 4/0 AWG BARE SOFT DRAWN STRANDED COPPER CONDUCTOR, UNLESS NOTED OTHERWISE. DIRECT BURIED OR RUN UNDER SLAB.
—o—o—o—o—o—	DATALINK – FIBEROPTIC AND/OR NETWORK TYPE CABLES OR LINES.

GENERAL SYMBOLS

}	BRACKET
	BREAKLINE
CABLE TYPE / CABLE No.	CABLE BUBBLE
℄	CENTERLINE
A	COLUMN BUBBLE
•	CONNECTION OR TIE POINT
	CONTINUE
	ELEVATION MARKER
##	KEYED NOTE
1 / DWG NO.	DETAIL CALL OUT MARKER USES INCREMENTAL NUMERICAL VALUE INCLUDES DRAWING NUMBER WHERE DETAIL CAN BE FOUND
DETAIL 1 / SCALE DWG NO.	DETAIL VIEW MARKER USES INCREMENTAL NUMERICAL VALUE INCLUDES DRAWING NUMBER WHERE DETAIL WAS CALLED OUT
A / DWG NO.	SECTION CUT MARKER USES INCREMENTAL ALPHABETICAL VALUE INCLUDES DRAWING NUMBER WHERE SECTION CAN BE FOUND
SECTION A / SCALE DWG NO.	SECTION VIEW MARKER USES INCREMENTAL ALPHABETICAL VALUE INCLUDES DRAWING NUMBER WHERE SECTION WAS CUT
N	NORTH ARROW
	DEDICATED ELECTRICAL WORKING SPACE
	RESERVED SPACE

GROUNDING SYMBOLS

	GROUND ROD
	GROUND ROD WITH INSPECTION WELL
	EXOTHERMIC WELD
	CONNECTION TO EXISTING GROUND GRID
B	SKID MOUNTED GROUND LUG
	GROUNDING PIGTAIL 4/0 AWG BARE SOFT DRAWN STRANDED COPPER CONDUCTOR, UNLESS NOTED OTHERWISE. CONNECT TO TRANSFORMERS, PANELS AND OTHER ELECTRICAL EQUIPMENT AS REQUIRED.

ONE LINE SYMBOLS

	MEDIUM VOLTAGE DRAW-OUT CIRCUIT BREAKER
52L	UTILITY LINE RECLOSER
	GENERATOR
N E L	AUTOMATIC TRANSFER SWITCH – N = NORMAL – E = EMERGENCY – L = LOAD
Δ Y	POWER TRANSFORMER – DELTA PRIMARY – WYE SECONDARY
Y Δ	POWER TRANSFORMER – WYE PRIMARY – DELTA SECONDARY
Δ Y Y	DELTA, WYE, WYE (GROUNDED)
	CURRENT LIMITING REACTOR
LA	LIGHTNING ARRESTOR
	NEUTRAL GROUNDING RESISTOR
	SURGE ARRESTOR
(1) 25 GMP	DEVICE (1) INDICATES THE NUMBER OF DEVICES 25 INDICATES THE ANSI/IEEE STANDARD DEVICE FUNCTION GMP INDICATES THE DEVICE IS A FUNCTION OF THE GMP
AVR	METERING DEVICE, REGULATOR SYSTEM, PROTECTION RELAY, ETC. AVR = AUTOMATIC VOLTAGE REGULATOR FPS = FEEDER PROTECTION SYSTEM GMP = GENERATOR MONITORING & PROTECTION RELAY MTR = METERING
	FUSE
	GROUND
29	CT TEST SWITCH
29	TEST SWITCH
(3) 600/5	CURRENT TRANSFORMER TOP LINE = NUMBER OF CT'S BOTTOM LINE = CT RATIO
12,470 – 120V (3)	POTENTIAL TRANSFORMER TOP LINE = VOLTAGE LEVEL BOTTOM LINE = NUMBER OF PT'S
12,470 – 120/120V (3)	POTENTIAL TRANSFORMER – DUAL SECONDARY TOP LINE = VOLTAGE LEVEL BOTTOM LINE = NUMBER OF PT'S
30 / 30	FUSED DISCONNECT TOP LINE = FRAME, BOTTOM LINE = TRIP
HMCP 150 / 30	MOLDED CASE CIRCUIT BREAKER TOP LINE = FRAME, BOTTOM LINE = TRIP
VFD	MOTOR DRIVE (SEE ABBREVIATIONS)
SIZE 1 / FVNR	MOTOR STARTER TOP LINE = SIZE, BOTTOM LINE = TYPE
30A / NF	DISCONNECT TOP LINE = FRAME, BOTTOM LINE = TRIP (NF = NON-FUSED)
HP	MOTOR
kW	NON-MOTOR LOAD
	DRAW-OUT STABS. SINGLE STAB USED FOR PREPARED SPACE
SPD	SURGE PROTECTION DEVICE
PQM	POWER QUALITY METER

CONDUCTOR COLORS

B	BLACK	R/B	RED W/BLACK TRACE
R	RED	U/B	BLUE W/BLACK TRACE
U	BLUE	O/B	ORANGE W/BLACK TRACE
O	ORANGE	Y/B	YELLOW W/BLACK TRACE
Y	YELLOW	N/B	BROWN W/BLACK TRACE
N	BROWN	B/R	BLACK W/RED TRACE
DKG	DARK GRAY	U/R	BLUE W/RED TRACE
LTG	LIGHT GRAY	O/R	ORANGE W/RED TRACE
W	WHITE	Y/R	YELLOW W/RED TRACE
G	GREEN	N/R	BROWN W/RED TRACE

ABBREVIATIONS

3W	3-WIRE	L	LOAD
4W	4-WIRE	LA	LIGHTNING ARRESTER
A	AMPERE	LC	LIGHTING CONTACTOR
AC	ALTERNATING CURRENT	LF	LINEAR FEET
ACU	AIR CONDITIONING UNIT	LP	LIGHTING PANEL
AFF	ABOVE FINISHED FLOOR	LS	LIMIT SWITCH
AFG	ABOVE FINISHED GRADE	LSIG	LONG TIME, SHORT TIME, INSTANTANEOUS GROUND
AHJ	AUTHORITY HAVING JURISDICTION	LTG	LIGHTING
AHP	ABOVE HIGH POINT (OF CONCRETE FLOOR)	MAX	MAXIMUM
AHU	AIR HANDLING UNIT	MC	METAL CLAD
AIC	AMPERE INTERRUPTING CAPACITY	MCB	MAIN CIRCUIT BREAKER
AMP	AMPERE	MCC	MOTOR CONTROL CENTER
ANN	ANNUNCIATOR	MCCB	MOLDED CASE CIRCUIT BREAKER
ANSI	AMERICAN NATIONAL STANDARDS INSTITUTE	MD	MAIN DISCONNECT
ATS	AUTOMATIC TRANSFER SWITCH	MFR	MANUFACTURER
AVR	AUTOMATIC VOLTAGE REGULATOR	MH	MAN HOLE
AWG	AMERICAN WIRE GAUGE	MI	MINERAL INSULATED
BFG	BELOW FINISHED GRADE	MIN	MINIMUM
BLDG	BUILDING	MLO	MAIN LUG ONLY
BOF	BOTTOM OF FIXTURE	MO	MECHANICALLY OPERATED
BOS	BOTTOM OF STEEL	MOV	MOTOR OPERATED VALVE
BOT	BOTTOM OF TRAY	MRCT	MULTI-RATIO CURRENT TRANSFORMER
C	CONDUIT	MTD	MOUNTED
C&C	CONDUIT AND CABLE	MTR	METERING
CATV	CABLE TELEVISION	MTR	MOTOR
CB	CIRCUIT BREAKER	MTS	MANUAL TRANSFER SWITCH
CCTV	CLOSED CIRCUIT TELEVISION	MV	MEDIUM VOLTAGE
CL	CENTERLINE	N	NEUTRAL OR NORMAL
CLF	CURRENT LIMITING FUSE	NA	NOT APPLICABLE
CLG	CEILING	NC	NORMALLY CLOSED
CLR	CURRENT LIMITING REACTOR	NEC	NATIONAL ELECTRICAL CODE (NFPA-70)
CLX	METAL CLAD ARMORED CABLE	NEG	NEGATIVE
CMD	COMMAND	NEUT	NEUTRAL
CONT	CONTACTOR OR CONTINUED	NF	NON-FUSED
CP	CONTROL PANEL	NIC	NOT IN CONTRACT
CPT	CONTROL POWER TRANSFORMER	NO	NORMALLY OPEN
CT	CURRENT TRANSFORMER	No.	NUMBER
CU	CONDENSING UNIT OR COPPER	NTS	NOT TO SCALE
CUH	CABINET UNIT HEATER	OC	ON CENTER
CWP	CONDENSER WATER PUMP	OCD	OVERCURRENT DEVICE
DACT	DIGITAL ALARM COMMUNICATOR TRANSMITTER	OL	OVERLOAD
DB	DIRECT BURIED OR DIRECT BURIAL (CABLE)	PB	PULL BOX OR PUSHBUTTON
DC	DIRECT CURRENT	PC	PHOTOCELL
DCS	DISTRIBUTED CONTROL SYSTEM	PDP	POWER DISTRIBUTION PANEL
DIA	DIAMETER	PE	PHOTOELECTRIC
DISC	DISCONNECT	PF	POWER FACTOR
DN	DOWN	PH	PHASE
DPM	DIGITAL POWER MONITOR	PLC	PROGRAMMABLE LOGIC CONTROLLER
DT	DUST TIGHT	PNL	PANEL
DWG	DRAWING	PP	POWER PANEL
E	EMERGENCY	PR	PAIR
EF	EXHAUST FAN	PRI	PRIMARY
EL	ELEVATION	PT	POTENTIAL TRANSFORMER
EMT	ELECTRICAL METALLIC TUBING	PVC	POLYVINYL CHLORIDE
EO	ELECTRICALLY OPERATED	QD	QUIAD
EP	EMERGENCY PANEL OR EXPLOSION PROOF	RAC	RIGID ALUMINUM CONDUIT
EQP	EQUIPMENT	RCPT	RECEPTACLE
ES	EMERGENCY STOP	REF	REFERENCE
EUH	ELECTRIC UNIT HEATER	REG	REGULATOR
EWC	ELECTRIC WATER COOLER	REL	RELOCATED
EWH	ELECTRIC WATER HEATER	REQ'D	REQUIRED
EXC	EXCITER	RES	RESISTOR
EXIST	EXISTING	RGC	RIGID GALVANIZED CONDUIT
FAA	FIRE ALARM ANNUNCIATOR	RM	ROOM
FACP	FIRE ALARM CONTROL PANEL	RSC	RIGID STEEL CONDUIT
FBO	FURNISHED BY OTHERS	RTD	RESISTANCE TEMPERATURE DETECTOR
FLA	FULL LOAD AMPS	RTU	REMOTE TERMINAL UNIT
FLR	FLOOR	RVSS	REDUCED VOLTAGE SOFT STARTER
FO	FIBER OPTIC	SA	SURGE ARRESTOR
FPS	FEEDER PROTECTION SYSTEM	SCR	SELECTIVE CATALYTIC REDUCTION
FVNR	FULL VOLTAGE NON-REVERSING	SEC	SECONDARY
FVR	FULL VOLTAGE REVERSING	SHLD	SHIELD
FWE	FURNISHED WITH EQUIPMENT	SHT	SHEET
FU	FUSE	SN	SOLID NEUTRAL
G	GROUND	SOV	SOLENOID ACTIVATED VALVE
GA	GENERAL ARRANGEMENT	SP	SPARE
GEC	GROUNDING ELECTRODE CONDUCTOR	SPD	SURGE PROTECTION DEVICE
GEN	GENERATOR	SS	SELECTOR SWITCH
GFCI	GROUND FAULT CIRCUIT INTERRUPT	STP	SHIELDED TWISTED PAIR
GMP	GENERATOR MONITORING & PROTECTION RELAY	STT	SHIELDED TWISTED TRIPLET
GND	GROUND	SWBD	SWITCHBOARD
HH	HAND HOLE	SWGR	SWITCHGEAR
HMCP	HIGH INTERRUPTING MOTOR CIRCUIT PROTECTOR	SWYD	SWITCHYARD
HMI	HUMAN MODULE INTERFACE	TB	TERMINAL BLOCK
HOA	HAND-OFF-AUTO	TC	TRAY CABLE
HP	HORSEPOWER	TCK	THERMOCOUPLE CABLE, K = TYPE
HPU	HYDRAULIC POWER UNIT	TOC	TOP OF CONCRETE
HTCP	HEAT TRACE CONTROL PANEL	TOS	TOP OF SLAB OT TOP OF STEEL
HTP	HEAT TRACE PANEL	TR	TRIAD
HTR	HEATER	TVSS	TRANSIENT VOLTAGE SURGE SUPPRESSER
HZ	HERTZ	TYP	TYPICAL
I&C	INSTRUMENTATION AND CONTROL	UH	UNIT HEATER
IAC	INTERLOCKED ARMOR CABLE	UNO	UNLESS NOTED OTHERWISE
ID	IDENTIFICATION	UPS	UNINTERRUPTIBLE POWER SUPPLY
IEEE	INSITUTE OF ELECTRICAL AND ELECTRONICS ENGINEERS	V	VOLT
IG	ISOLATED GROUND	VA	VOLT-AMPERE
IL	INDICATING LIGHT	VAC	VOLTS ALTERNATING CURRENT
IMC	INTERMEDIATE METAL CONDUIT	VAR	VOLT-AMPERE REACTIVE
INTLK	INTERLOCK	VDC	VOLTS DIRECT CURRENT
JB	JUNCTION BOX	VFD	VARIABLE FREQUENCY DRIVE
k	KILO (ONE THOUSAND)	VP	VAPOR PROOF
kAIC	KILOAMP INTERRUPTING CAPACITY	VR	VOLTAGE REGULATOR
kCMIL	THOUSAND CIRCULAR MILS	W	WATTS
kV	KILOVOLT	WM	WATT METER
kVA	KILOVOLT-AMPERE	WP	WEATHER PROOF
kVAR	KILOVOLT-AMPERE REACTIVE	WR	WELDING RECEPTACLE
kW	KILOWATT	WT	WATERTIGHT (SUBMERSIBLE)
kWH	KILOWATT-HOUR	w/	WITH
		XDCR	TRANSDUCER
		XFMR	TRANSFORMER
		XP	EXPLOSION PROOF

STATE OF MAINE
JOHN S. BURGOYNE
11435
LICENSED
PROFESSIONAL ENGINEER

4/6/2016

NOT FOR CONSTRUCTION

ISSUED FOR BIDS

NO.	DATE	BY	DESCRIPTION
B	04/04/16	GAG	ISSUED FOR BIDS

CURRENT REVISION

MID-SOUTH ENGINEERING
1658 Malvern Ave.
Hot Springs, Arkansas 71901
200 Mackenan Drive
Cary, North Carolina 27511
70 Spring Street, Suite 3
Millinocket, Maine 04462
WWW. MSECO.COM

RECEIVING & STORAGE
OVERALL AREA
ELECTRICAL, SYMBOLS, NOTES & DETAILS
LEGEND & GENERAL NOTES

STATE OF MAINE BUREAU OF PARKS & LANDS
RADAR ROAD ASHLAND
STATE: ME

SCALE				DRAWING NO.
3/8" = 1' - 0"	DRN.	GAG	03/31/16	7073-2000-00-EL 001
	CKD.	JSB	03/31/16	
	APP.	JSB	03/23/16	

GENERAL NOTES FOR LIGHTING PLANS

1. THE MINIMUM SIZE LIGHTING AND POWER WIRING SHALL BE #12 AWG.
2. ALL INTERIOR DISTRIBUTION AND BRANCH WIRING SHALL BE 600V, COPPER WITH THHN/THWN INSULATION. ALL EXTERIOR DISTRIBUTION AND BRANCH WIRING SHALL BE 600V, COPPER WITH XHHW INSULATION.
3. AN EQUIPMENT GROUNDING CONDUCTOR SHALL BE INSTALLED WITH EVERY FEEDER AND BRANCH CIRCUIT.
4. ALL LIGHTING TOGGLE SWITCHES SHALL BE COMMERCIAL SPECIFICATION GRADE 277/120V, SIDE WIRED AND PROVIDED WITH GROUNDING SCREW. LEVITON, PASS AND SEYMOUR OR APPROVED EQUAL.
5. ALL CONVENIENCE RECEPTACLES SHALL BE INDUSTRIAL GRADE GROUNDING TYPE NEMA 5-20R, SIDE WIRED. LEVITON, PASS AND SEYMOUR OR APPROVED EQUAL. ALL CONVENIENCE RECEPTACLES TO BE INSTALLED ON THE PLANT FLOOR, IN ELECTRICAL ROOMS OR IN/ON AUXILIARY BUILDINGS ON THE SITE SHALL BE GFCI PROTECTED.
6. ALL CONVENIENCE RECEPTACLES SHALL BE MOUNTED 18" AFF, ALL LAVATORY GFCI RECEPTACLES SHALL BE MOUNTED AT 48" AFF, ALL LIGHTING TOGGLE SWITCHES SHALL BE MOUNTED AT 48" AFF AND ALL TEL/DATA SYSTEM OUTLETS SHALL BE MOUNTED AT 18" AFF, UNLESS NOTED OTHERWISE.
7. COORDINATE THE COLOR OF ALL WIRING DEVICES WITH THE OWNER. PROVIDE MATCHING WALL PLATES FOR ALL WIRING DEVICES IN FINISHED AREAS. PROVIDE STAINLESS STEEL WALL PLATES FOR ALL WIRING DEVICES IN UNFINISHED AREAS.
8. THE MOUNTING HEIGHTS INDICATED FOR ALL LIGHTING FIXTURES SHALL BE TO THE BOTTOM OF FIXTURE (BOF) UNLESS NOTED OTHERWISE. ACTUAL LIGHTING FIXTURE LOCATIONS AND MOUNTING HEIGHTS MAY BE ADJUSTED IN THE FIELD TO AVOID PIPING, HANGERS AND OTHER ARCHITECTURAL APPURTENANCES.

GENERAL NOTES FOR POWER PLANS

1. THE MINIMUM SIZE POWER WIRING SHALL BE #12 AWG.
2. ALL CABLES SHOWN ON THE ELECTRICAL DRAWINGS SHALL BE TYPE TC (TRAY CABLE) UNLESS NOTED OTHERWISE.
3. ALL CABLES SHALL BE SUPPORTED BY CABLE TRAY, CONDUIT OR A COMBINATION OF RACEWAYS.
4. ALL CABLES SHALL BE SUPPORTED BY CONDUIT FOR THEIR ENTIRE LENGTH, FROM THE CABLE TRAY TO THE MOTOR OR FIELD DEVICE. CONDUIT MAY BE USED AS A RACEWAY FOR ANY SINGLE CONDUCTORS OR MULTICONDUCTOR CABLE.
5. ALL INTERIOR AND EXTERIOR CONDUIT SHALL BE RIGID GALVANIZED STEEL, EXCEPT FOR FLEXIBLE MOTOR CONNECTIONS. THE MINIMUM SIZE CONDUIT SHALL BE 3/4".
6. ALL FLEXIBLE CONNECTIONS TO MOTORS SHALL BE LIQUID TIGHT FLEXIBLE METAL CONDUIT UNLESS NOTED OTHERWISE.
7. ALL SPARE CONDUITS SHALL BE CAPPED 12" MINIMUM AFF OR AFG. ALL SPARE CONDUITS SHALL BE PROVIDED WITH A FISH WIRE.
8. ALL MOTOR SAFETY SWITCHES, DISCONNECTS AND MOTOR STARTERS SHALL BE PROVIDED BY THE CONTRACTOR UNLESS NOTED OTHERWISE.
9. ALL PENETRATIONS THROUGH FLOORS, RATED WALLS AND PARTITIONS SHALL BE SEALED WITH UL APPROVED FIRE SEALANT MATERIAL TO MAINTAIN THE RATING OF SEPARATION. FLOOR PENETRATIONS FOR CABLE TRAYS OR CONDUITS SHALL HAVE CURBING OR GROUTED STAINLESS STEEL PIPE SLEEVES TO PREVENT THE FLOW OF LIQUIDS.
10. THE CONTRACTOR SHALL PROVIDE CONCRETE HOUSEKEEPING PADS FOR ALL FLOOR MOUNTED ELECTRICAL EQUIPMENT INSTALLED. THE HOUSEKEEPING PADS SHALL HAVE A MINIMUM OF A 4" THICK PAD EXTENDING 2" BEYOND THE EXPOSED EDGE OF THE EQUIPMENT AND SHALL INCLUDE A 2" CHAMFERED CORNER.

GENERAL NOTES FOR I&C PLANS

1. THE MINIMUM SIZE CONTROL WIRING SHALL BE #14 AWG.
2. THE MINIMUM SIZE SHIELDED CABLE SHALL BE 2 PAIR #18 AWG.
3. THE WIRING FOR THE FOLLOWING CATEGORIES SHALL INSTALLED IN SEPARATE RACEWAYS AND SHALL NOT BE COMBINED IN A SINGLE CONDUIT.
   - 3.1. 120VAC POWER WIRING
   - 3.2. 120VAC CONTROL AND DISCRETE SIGNAL WIRING
   - 3.3. 24VDC CONTROL AND DISCRETE SIGNAL WIRING
   - 3.4. 4-20mADC ANALOG SIGNAL WIRING
4. PROVIDE ALL NECESSARY CONDUIT AND CABLES BETWEEN THE CONTROL PANELS AND FIELD INSTRUMENTS AS REQUIRED BY EQUIPMENT VENDORS AND AS INDICATED ON THE DRAWINGS. WHERE DISCREPANCIES ARE FOUND, THE STRICTER OF THE TWO SHALL GOVERN.

GENERAL NOTES FOR DEMOLITION PLANS

1. REMOVE ALL ELECTRICAL EQUIPMENT COMPLETELY WHERE INDICATED. REMOVE ALL CIRCUIT CONDUCTORS, SWITCHES, LIGHTING FIXTURES AND MISCELLANEOUS APPLIANCES BACK TO ENERGIZING SOURCE OR JUNCTION BOX WHERE MULTIPLE EQUIPMENT IS POWERED.

GENERAL NOTES FOR LIGHTNING PROTECTION PLANS

1. THE COMPLETED INSTALLATION SHALL MEET THE "INSTALLATION REQUIREMENTS FOR LIGHTNING PROTECTION SYSTEMS, UL96A" OF UNDERWRITERS LABORATORIES – CURRENT EDITION. A CERTIFICATE OF COMPLETION FROM AN AUTHORITY HAVING JURISDICTION SHALL BE FURNISHED TO THE OWNER UPON COMPLETION.
2. ALUMINUM LIGHTNING PROTECTION SYSTEM COMPONENTS SHALL NOT BE MOUNTED TO COPPER SURFACES. COPPER COMPONENTS SHALL BE USED TO AVOID ELECTROLYTIC CORROSION.
3. METAL BODIES WITHIN 6'-0" OF THE LIGHTNING PROTECTION SYSTEM SHALL BE BONDED TO THE SYSTEM IN ACCORDANCE WITH UL96A.
4. UNDERGROUND METALLIC PIPING ENTERING THE BUILDING SHALL BE BONDED TO THE NEAREST DOWN CONDUCTOR OR GROUND ELECTRODE.
5. ADHESIVE USED WITH ADHESIVE AIR TERMINAL BASES AND CONDUCTOR FASTENERS SHALL BE COMPATIBLE WITH ROOFING MEMBRANE – VERIFY WITH ROOFING CONTRACTOR.
6. AIR TERMINALS HAVE BEEN LOCATED ON THE ROOF TOP EQUIPMENT AS REQUIRED. IF THE METAL THICKNESS OF AN OBJECT IS 3/16" OR GREATER, AIR TERMINALS MAY BE ELIMINATED IF THE OBJECT IS PROPERLY CONNECTED TO THE SYSTEM.
7. ROOF TOP EQUIPMENT NOT SHOWN ON THIS DRAWING SHALL BE PROTECTED AS REQUIRED TO MEET THE REQUIREMENTS LISTED ABOVE INCLUDING THE INSTALLATION OF AIR TERMINALS AND OR BONDING. IF THE METAL THICKNESS OF AN OBJECT IS 3/16" OR GREATER, AIR TERMINALS MAY BE ELIMINATED IF THE OBJECT IS PROPERLY CONNECTED TO THE SYSTEM.
8. AIR TERMINALS ARE TO BE LOCATED AS SHOWN. THEY ARE TO BE A MAXIMUM OF 24" FROM THE ROOF EDGE AND PROJECT A MINIMUM OF 10" ABOVE THE PROTECTED EDGE. THE SPACING BETWEEN AIR TERMINALS ARE NOT TO EXCEED 20 FEET. AIR TERMINALS THAT EXTEND 24" OR ABOVE THE PROTECTED EDGE ARE NOT TO EXCEED A SPACING GREATER THAN 25', EXCEPT FOR MID-ROOF AIR TERMINALS (50' MAX SPACING).
9. ALL LIGHTING CONDUCTORS ARE TO MAINTAIN A HORIZONTAL OR DOWNWARD PATH. ALL BENDS IN THE CONDUCTOR SHALL HAVE A RADIUS BEND OF 8 INCHES OR GREATER, AND SHALL HAVE AN ANGLE BEND OF 90 DEGREES OR GREATER.
10. EACH INDIVIDUAL ITEM OF THE LIGHTING PROTECTION SYSTEM IS NOT LABELED FOR THE SAKE OF CLARITY. ITEMS ARE INDICATED AT RANDOM LOCATIONS ONLY, BUT A COMPLETE SYSTEM SHALL BE PROVIDED TO MEET MASTER LABEL REQUIREMENTS.
11. ROOF PADS, PAVERS, FLASHINGS OR ANY OTHER SPECIAL ROOFING MATERIALS REQUIRED FOR THE INSTALLATION OF THE LIGHTNING PROTECTION SYSTEM SHALL BE FURNISHED AND INSTALLED BY THE ROOFING CONTRACTOR.

LIGHTING SYMBOLS

- A, b — 1x4 FLUORESCENT LIGHT FIXTURE
- A, b — 2x4 FLUORESCENT LIGHT FIXTURE
- A, b — DOWN LIGHT FIXTURE
- A, b — FLOOD LIGHT FIXTURE
- A, b — POLE MOUNTED LIGHT FIXTURE
- A, b — WALLPACK LIGHT FIXTURE

UPPER CASE LETTER (A) INDICATES FIXTURE TYPE
(SEE LIGHT FIXTURE SCHEDULE)
LOWER CASE LETTER (b) INDICATES SWITCHING CIRCUIT

S_b, S, S_2, S_3, S_4, S_D, S_{HR}, S_K, S_{LV}, S_{OS}, S_P, S_{WP}, S_{XP} — TOGGLE SWITCH – AS SPECIFIED

LOWER CASE LETTER INDICATES SWITCHING CIRCUIT

BLANK	SINGLE POLE SWITCH
2	DOUBLE POLE SWITCH
3	3-WAY SWITCH
4	4-WAY SWITCH
D	DIMMER SWITCH
HR	HORSEPOWER RATED SWITCH
K	KEY OPERATED SWITCH
LV	LOW VOLTAGE SWITCH
OS	OCCUPANCY SWITCH
P	SINGLE POLE SWITCH WITH PILOT LAMP
WP	WEATHER PROOF SWITCH
XP	EXPLOSION PROOF SWITCH

RECEPTACLE – AS SPECIFIED

- SINGLE RECEPTACLE. NEMA 5-20R
- DUPLEX RECEPTACLE. NEMA 5-20R
- QUAD RECEPTACLE. NEMA 5-20R
- DUPLEX GFCI RECEPTACLE. NEMA 5-20R
- QUAD GFCI RECEPTACLE. NEMA 5-20R
- DUPLEX RECEPTACLE. NEMA 5-20R FLUSH FLOOR MOUNTED
- QUAD RECEPTACLE. NEMA 5-20R FLUSH FLOOR MOUNTED
- DUPLEX RECEPTACLE. NEMA 5-20R FLUSH FLOOR MOUNTED WITH PROVISIONS FOR DATA

GFCI	GROUND FAULT CIRCUIT INTERRUPTOR
WP	WEATHER PROOF
XP	EXPLOSION PROOF

EXIT SIGN – CEILING, UNIT OR WALL MOUNTED AS REQUIRED
ARROW(S) INDICATES EGRESS DIRECTION
SHADED AREA INDICATES SIGN FACE

TANDEM EMERGENCY LIGHT BATTERY PACK AND EXIT SIGN
ARROW(S) INDICATES EGRESS DIRECTION
SHADED AREA INDICATES SIGN FACE
ROMAN NUMERALS FOR REMOTE HEAD REFERENCE

EMERGENCY LIGHT BATTERY PACK
ROMAN NUMERALS FOR REMOTE HEAD REFERENCE

REMOTE EMERGENCY LIGHTING HEAD
ROMAN NUMERALS FOR BATTERY PACK POWER REFERENCE

PC — CONTROL DEVICE OR EQUIPMENT

LC	LIGHTING CONTACTOR
PC	PHOTOCELL

POWER SYMBOLS

CAM1 / PTZ — CAMERA (PTZ = PAN, TILT, ZOOM CAPABILITIES)

PB — CONTROL DEVICE OR EQUIPMENT

CR	CARD READER
ES	ELECTRIC DOOR STRIKE
HS	HAND SWITCH
JB	JUNCTION BOX
PB	PUSHBUTTON
PS	PRESSURE SWITCH
TS	THERMOSTAT

HEATER — POWER DEVICE OR EQUIPMENT

CP	CONTROL PANEL
HEATER	HEATER
LP	LIGHTING PANEL
MOD	MOTOR OPERATED DAMPER
PP	POWER PANEL
RVSS	REDUCED VOLTAGE SOFT STARTER
VFD	VARIABLE FREQUENCY DRIVE
XFMR	TRANSFORMER

F, 30A / 30A, (3R) — DISCONNECT SWITCH
F = FUSED, CB = CIRCUIT BREAKER
TOP LINE = FRAME SIZE
BOTTOM LINE = TRIP RATING
(3R) = NEMA RATING

SIZE 1 / FVNR, (3R) — MOTOR STARTER
(3R) = NEMA RATING
NEMA SIZE AND TYPE INDICATED AT RIGHT

SIZE 1 / FVNR, F, 30A / 30A, (3R) — COMBINATION DISCONNECT SWITCH/MOTOR STARTER
F = FUSED, CB = CIRCUIT BREAKER
TOP LINE = FRAME SIZE
BOTTOM LINE = TRIP RATING
(3R) = NEMA RATING
NEMA SIZE AND TYPE INDICATED AT LEFT

10 / WP — ELECTRIC MOTOR
NUMBER INDICATES HORSE POWER RATING
WP = WEATHER PROOF
XP = EXPLOSION PROOF

METER — UTILITY METER

XP — WELDING RECEPTACLE
WP = WEATHER PROOF
XP = EXPLOSION PROOF

X / 3/C #12 w/GND, 3/4"C — HOME RUN
X CABLE DESTINATION
Y CABLE AND CONDUIT SIZE AND TYPE (3/C #12 w/GND, 3/4"C IF BLANK)

COMMUNICATIONS & FIRE ALARM SYMBOLS

(2) 60" — PROVISIONS FOR TELEPHONE OUTLET

PROVISIONS FOR DATA OUTLET

PROVISIONS FOR COMBINATION TELEPHONE AND DATA OUTLET
NOTE: PROVISIONS INCLUDE THE FOLLOWING:
TWO-GANG WALL BOX WITH ONE 1"C
MOUNTED WITH CENTERLINE UP THE SAME AS RECEPTACLES
60" INDICATES MOUNTED WITH CL AT 60" AFF
(2) INDICATES TWO OUTLETS IN A SINGLE BOX

FACP — FIRE ALARM CONTROL PANEL

P — PULL STATION

S, CM — DETECTOR
S = SMOKE, F = FLAME, H = HEAT

HS, CM — HORN STROBE

XXcd, S, XXcd — STROBE

STATE OF MAINE
JOHN S. BURGOYNE
11435
LICENSED
PROFESSIONAL ENGINEER
4/6/2016

NOT FOR CONSTRUCTION

ISSUED FOR BIDS

NO.	DATE	BY	DESCRIPTION
B	04/04/16	GAG	ISSUED FOR BIDS

CURRENT REVISION

MID-SOUTH ENGINEERING
1658 Malvern Ave.
Hot Springs, Arkansas 71901
200 Mackenan Drive
Cary, North Carolina 27511
70 Spring Street, Suite 3
Millinocket, Maine 04462
WWW. MSECO.COM

RECEIVING & STORAGE
OVERALL AREA
ELECTRICAL, SYMBOLS, NOTES & DETAILS
LEGEND & GENERAL NOTES

STATE OF MAINE BUREAU OF PARKS & LANDS
RADAR ROAD ASHLAND
STATE: ME

SCALE				DRAWING NO.
3/8" = 1' – 0"	DRN.	GAG	03/31/15	7073-2000-00-EL002
	CKD.	JSB	03/31/15	
	APP.	JSB	03/31/15	

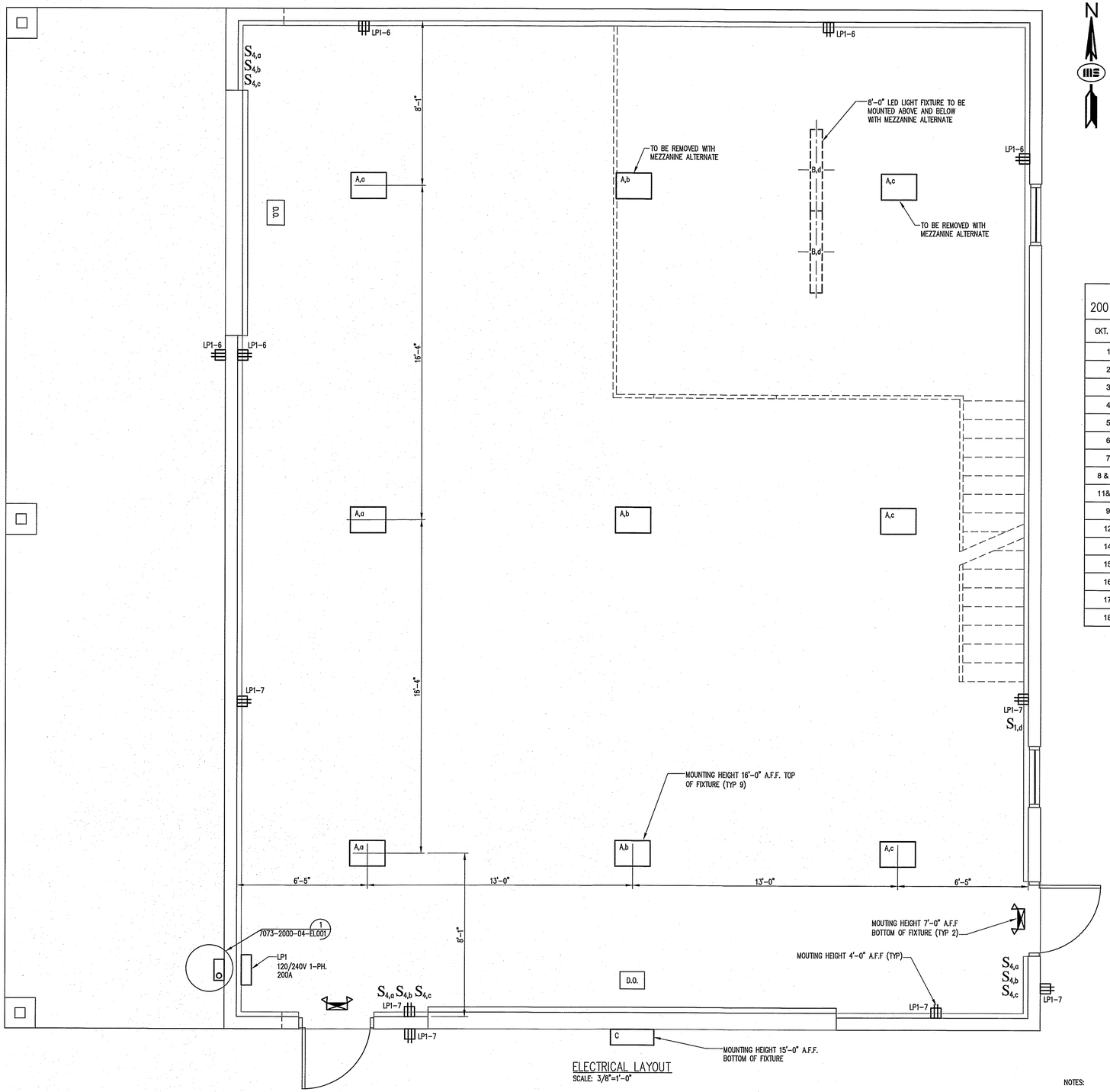

ELECTRICAL LAYOUT
SCALE: 3/8"=1'-0"

N

LIGHTING SCHEDULE

FIXTURE TYPE	QTY	SYMBOL	DESCRIPTION	REF. MODEL No.	REMARKS
A	9		RAB RAIL95W, LED, EXTRUDED METAL HOUSING W/ HEAT SINK FINS, 256 LAMPS, 95W, 12K LUMEN LED HIGHBAY, 120V-277V	RAB RAIL95W OR EQUAL	
B	4		GE LUMINATION, DS SERIES LED LUMINAIR, 3K COOR RATING, 850 LM/FT, WHITE FIXTURE, 120V-277V	GE LUMINATION DS SERIES DS-X-04-0-B1-M-V-WHT-85-BC OR EQUAL	
	9	S_4	FOUR POLE SWITCH, 20 AMP		
	1	S_1	SINGLE POLE SWITCH, 20 AMP		
	2		ILLUMINATED LED EXIT SIGN WITH EMERGENCY LIGHTS BATTERY BACKUP	DUAL LIGHT HCXURW-03L OR EQUAL	
C	1		LED EXTERIOR WALL PACK LIGHT, WITH MOTION SENSOR	RAB WPLED2T50/D10/WS2 OR EQUAL	

LP1 PANEL SCHEDULE
200 AMP MCB, 120/240V, 1 PHASE, 3 WIRE, 60 HERTZ

CKT. NO.	NO. POLES	RATING	DESCRIPTION
1	1	20	LOW-BAY LIGHTING
2	1	20	OUTSIDE LIGHT
3	1	20	EXIT SIGNS
4	1	20	OVERHEAD DOOR -SOUTH
5	1	20	OVERHEAD DOOR-WEST
6	1	20	RECEPTACLES-NORTH SIDE
7	1	20	RECEPTACLES-SOUTH SIDE
8 & 10	2	20	SPARE
11&13	2	20	SPARE
9	1	20	MEZZANINE LIGHTING
12	1	20	SPARE
14	1	20	SPARE
15	1	20	SPARE
16	1	20	SPARE
17	1	20	SPARE
18	1	20	SPARE

LEGEND

- ILLUMINATED LED EXIT SIGN WITH EMERGENCY BATTERY BACKUP LIGHTS
- S_1 SINGLE POLE LIGHTING SWITCH
- S_4 FOUR POLE LIGHTING SWITCH
- DUPLEX RECEPTACLE, GFCI
- D.O. OVERHEAD GARAGE DOOR OPENER

NOTES:

1. THE POINT OF ATTACHMENT ON THE BUILDING TO BE DETERMINED BY THE REQUIRED MINIMUM GROUND CLEARANCES OF SERVICE DROP CONDUCTORS.
2. ALL WIRING AND MATERIALS MUST CONFORM TO THE REQUIREMENTS OF THE NATIONAL ELECTRICAL CODE AND TO APPLICABLE LOCAL CODES. WHERE CONFLICT EXISTS, THE MORE STRINGENT CODE WILL APPLY.

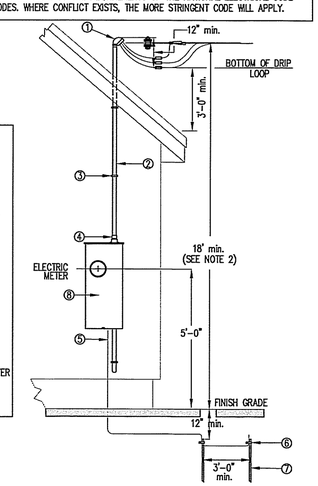

MATERIALS LIST

① WEATHERHEAD

② SERVICE ENTRANCE CABLE
TO BE INSTALLED WITH ENDS EXTENDING 3'-0" OUTSIDE OF WEATHERHEAD FOR DRIP LOOP.

③ CABLE CLIPS
INSTALLED EVERY 36".

④ WATERTIGHT CONNECTOR

⑤ GROUND WIRE
NO. 4 COPPER (MINIMUM SIZE) STAPLED EVERY 6".

⑥ GROUND ROD CONNECTORS

⑦ GROUND RODS
(2) MIN. 10'-0" x 5/8" DIAMETER COPPER CLAD.

⑧ INTERNAL SPADE CONNECTORS

SINGLE PHASE OVERHEAD ELECTRCIAL SERVICE ENTRANCE TYPICAL DETAIL (1)
SCALE: N.T.S.

4' 3' 2' 1' 0 3' 6'
BAR SCALE
3/8" = 1'-0"
CHECK GRAPHIC SCALE BEFORE USING

STATE OF MAINE
JOHN S. BURGOYNE
11435
LICENSED
PROFESSIONAL ENGINEER
4/6/2016

NOTES:

1. SEE DRAWING# 7073-2000-00-EL001 AND 7073-2000-00-EL002 FOR ELECTRICAL SYMBOLS, DETAILS, LEGEND AND GENERAL NOTES.

NOT FOR CONSTRUCTION

ISSUED FOR BIDS

NO.	DATE	BY	DESCRIPTION
B	04/04/16	GAG	ISSUED FOR BIDS

CURRENT REVISION

MID-SOUTH ENGINEERING
1658 Malvern Ave.
Hot Springs, Arkansas 71901
200 Mackenan Drive
Cary, North Carolina 27511
70 Spring Street, Suite 3
Millinocket, Maine 04462
WWW. MSECO.COM

RECEIVING & STORAGE
OVERALL AREA
ELECTRICAL, GENERAL ARRANGEMENT
ELECTRICAL LAYOUT

STATE OF MAINE BUREAU OF PARKS & LANDS
RADAR ROAD ASHLAND
STATE: ME

SCALE	DRN.	GAG	03/31/15	DRAWING NO.
3/8" = 1' - 0"	CKD.	JSB	03/31/15	7073-2000-04-EL 001
	APP.	JSB	03/31/15	