LAVALLEE | BRENSINGER ARCHITECTS

ADDENDUM NO. 7
March 31, 2016

Re: Sanford High School and Technical Center
12-067-00

To: Bidders and All Others to Whom Bidding Documents have been issued.
All items in this Addendum shall supersede or clarify the Bidding Documents as originally issued. The cost of the Work of all trades affected by the changes in this Addendum shall be included in the Base Bid or Alternates, on the Proposal Form, as applicable. Failure to do so may subject the Bidder to disqualification. This Addendum forms a part of the Contract Documents. It supplements and/or modifies them as follows:

Item No. 7.1 Construction Documents / Process: For your information: The Architects and Engineers will produce a conformed set of drawings and specification integrating Addenda items. The conformed set may also include added dimensions for ease of construction. Addenda items will be clouded on the drawings. The conformed "Construction Documents" are planned to be issued on or about 04/22/2016.

Item No. 7.2 Reference Drawing AI 0.02: In the finish schedule, room A183 Auditorium Stage / Back Stage should have VCB (Vented Cover Base) listed instead of RB-7 for the base.

Item No. 7.3 Reference Drawing J9/A4.20: The top of the CFMF in this details shows a deflection header in a location that does not require it. This CFMF should be shown as rigidly connected to the structure in this location.

Item No 7.4 Reference Drawing G1/A3.65: The Edge of the curtainwall should be set at 5" from Column Line B14.

Item No. 7.5 Reference Drawing A1.53: to Clarify, ACP-1 are Sound Absorbing Panels referenced under section 09 84 00 2.01B and SBD-1 are Barrel Diffusers referenced under section 09 84 00 2.02A.

Item No. 7.6 Reference Specification 31 51 00: Subsurface Constructors Inc. is now an approved Rammed Aggregate Pier Installer complying with the requirements of 31 51 00, 1.03A.

Item No. 7.7 Reference Stair Drawings and Specification 05 51 00: See revised drawings A5.33, A5.34, A5.35 and A5.36 for clarification on handrails. Additional detail keys and keynotes have been added; wood handrails have been changed to steel; a center rail detail for the Main Commons stair has been added; the center handrail at the auditorium seating has been modified. In Specification 05 51 00 2.03 Handrails and Guardrails at Bottom Mounting, all rails should be either 1) welded to the top of a stringer/perimeter steel tube or 2) welded to steel anchor cast into the concrete floor. A cast-in place anchor shall be provided where a guardrail or handrail meets the concrete floor without the use of exposed fasteners or plates.

Item No. 7.8 Reference Addendum NO. 2 Item No 2.44: Revise Answer to read: *"A Protective Overlayment is required and includes products like Carlisle's Sure-Seal EPDM Polyepichlorohydrin, or similar from other manufacturers meeting the description specified. This shall be provided at roof locations within 4' of all exhaust fans, and within 10' of all kitchen exhaust fans. The intent of this is to provide additional protection at areas which may be exposed to grease."*

Item No. 7.9 Reference drawing S1.11: SKS-02 is provided to clarify steel tube beam size at entry.
Reference drawing S1.14: Contractor shall provide additional steel tube for supplemental curtain wall support per SKS-03.

Item No. 7.10 Reference drawing S1.21: Contractor shall provide additional steel tubes for supplemental curtain wall support per SKS-04 and SKS-05.

Item No. 7.11 Reference drawing S1.24: Contractor shall locate W12x19 roof beam as shown in SKS-06. Provide section 3 on S3.3 at the roof level at the curtain wall along B12 line from A-H9 to AF.

Item No. 7.12 Reference drawing S3.3: Add section 1A to drawings S3.3. This section is shown in SKS-07.

Item No. 7.13 Reference drawing S1.25: Provide section 1A on S3.3 at the roof level at the curtain wall along CE line from C6 to C7.

Item No. 7.14 Reference drawing S1.27: Provide section 1A on S3.3 at the roof level at the curtain wall along DE line from D5.8 to D6.4.

Item No. 7.15 Reference drawing S1.28: Provide section 1A on S3.3 at the roof level at the curtain wall along EA line from E2 to E4. Provide section 3 on S3.3 at roof level at curtain wall along E1 line from EB1 to EC.

END OF ADDENDA #7

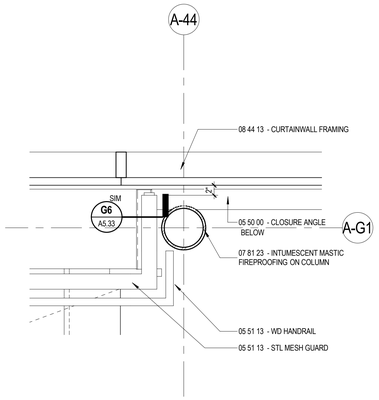

C4 A5.33 LEVEL 2 - COMMONS STAIR - Callout 1
1" = 1'-0"

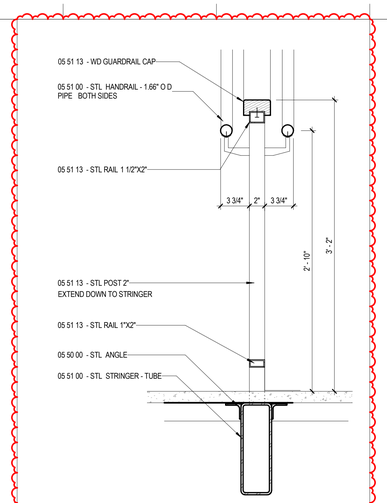

D6 A5.33 CENTER RAIL AT MAIN COMMONS STAIR
1 1/2" = 1'-0"

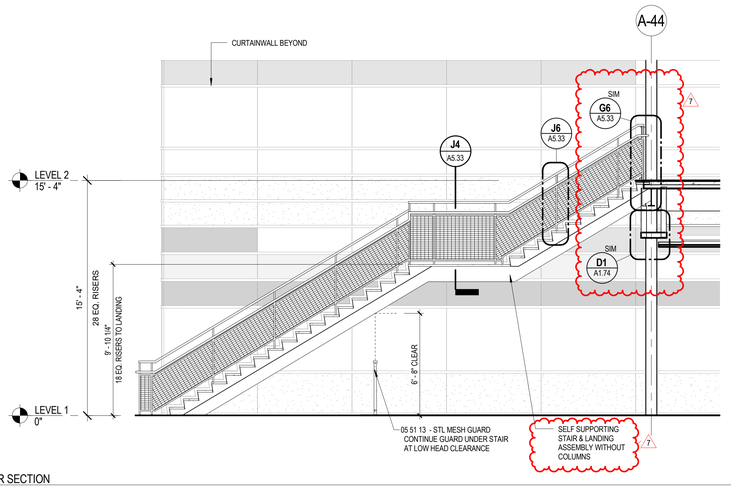

C9 A5.33 COMMONS STAIR SECTION
1/4" = 1'-0"

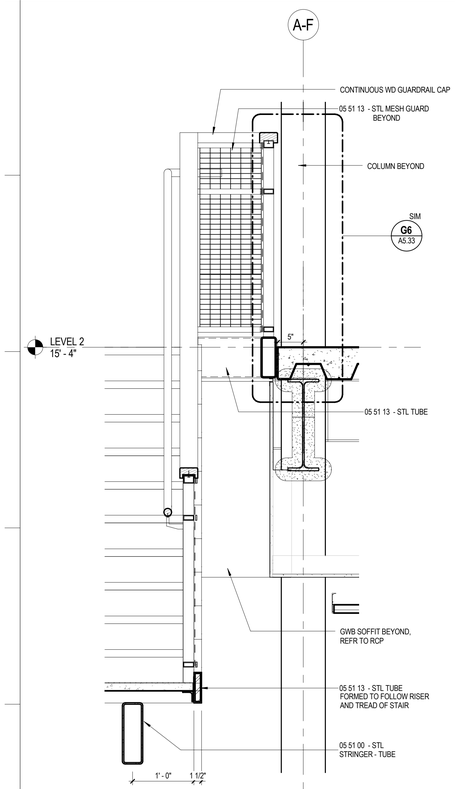

J1 A5.33 Detail 3
1" = 1'-0"

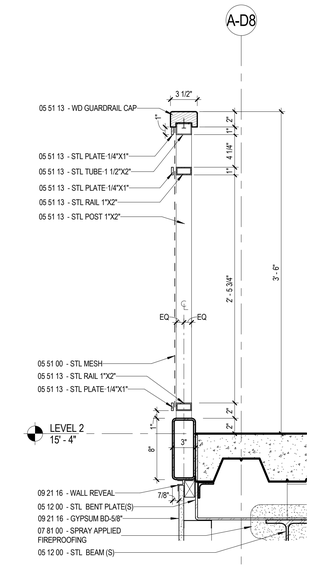

G4 A5.33 RAILING DETAIL @ AGORA/AUDITORIUM ENTRANCE SLAB EDGE
1 1/2" = 1'-0"

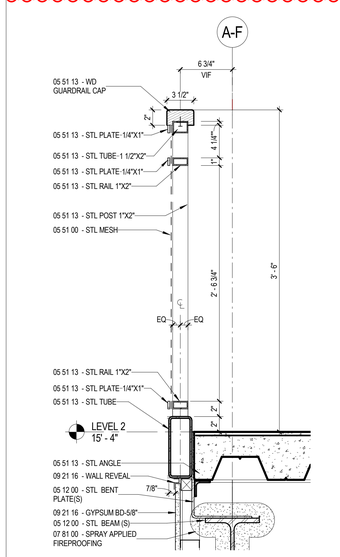

G6 A5.33 TYP. RAILING DETAIL @ SLAB EDGE
1 1/2" = 1'-0"

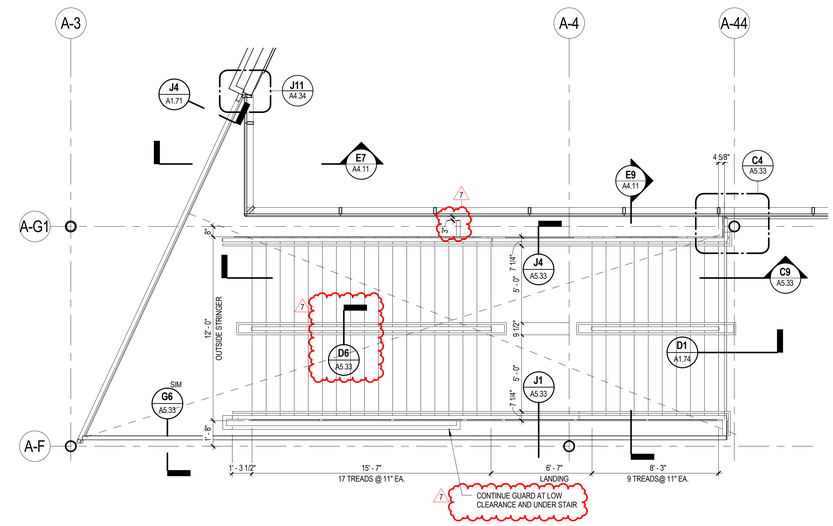

G9 A5.33 LEVEL 2 - COMMONS STAIR
1/4" = 1'-0"

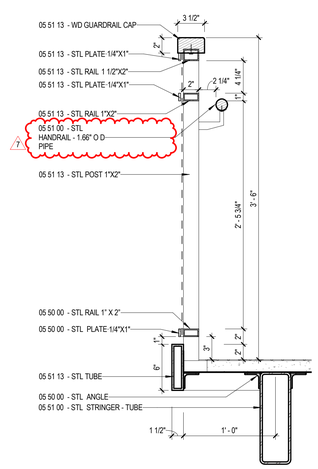

J4 A5.33 WIRE MESH GUARDRAIL W/ HANDRAIL
1 1/2" = 1'-0"

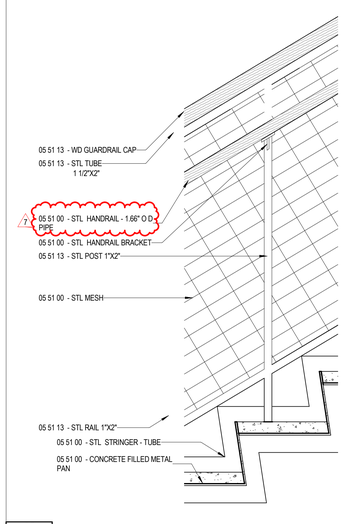

J6 A5.33 MAIN COMMONS STAIR SECTION
1 1/2" = 1'-0"

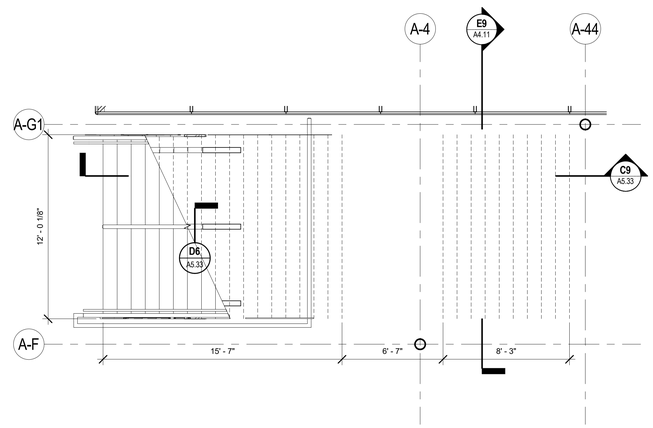

J9 A5.33 LEVEL 1 - COMMONS STAIR
1/4" = 1'-0"

LAVALLEE BRENSINGER ARCHITECTS
Boston | Manchester | Portland
155 Dow Street, Suite 400, Manchester, NH 03101
603.622.5450
305 Commercial Street, Portland, ME 04101
207.558.7200
www.LBPA.com

Sanford School Department and State of Maine Department of Education

SANFORD HIGH SCHOOL and TECHNICAL CENTER

SANFORD, ME 04073

NO.	DESCRIPTION	DATE
7	Addendum 7	03/31/16

FOR ADDITIONAL INFORMATION, REFER TO PROJECT MANUAL.

CONTENT:
MAIN STAIR PLANS, SECTIONS AND DETAILS

DRAWN BY:	KRL
PROJECT NO:	12-067-00
DATE:	02/11/2016
REVISED:	
SCALE:	As indicated

A5.33

Project Phase
BID DOCUMENTS

COPYRIGHT © 2016 BY LAVALLEE/BRENSINGER PROFESSIONAL ASSOCIATION. ALL RIGHTS RESERVED. NO REPRODUCTION WITHOUT PERMISSION.

3/30/2016 4:59:57 PM C:\Projects\12-067-00_Sanford Tech Central_v18_JoeSpence.rvt

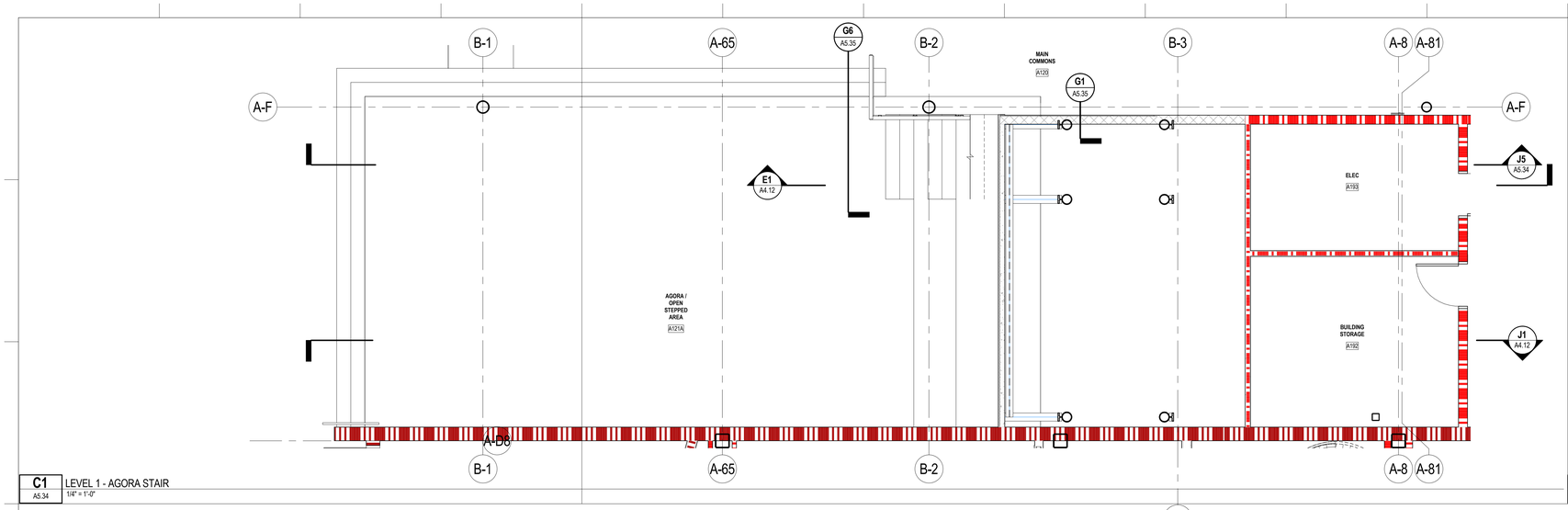

C1 A5.34 LEVEL 1 - AGORA STAIR
1/4" = 1'-0"

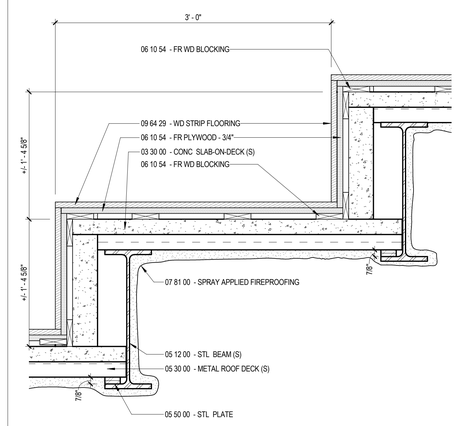

C12 A5.34 TYPICAL MONOLITHIC RISER DETAIL
1 1/2" = 1'-0"

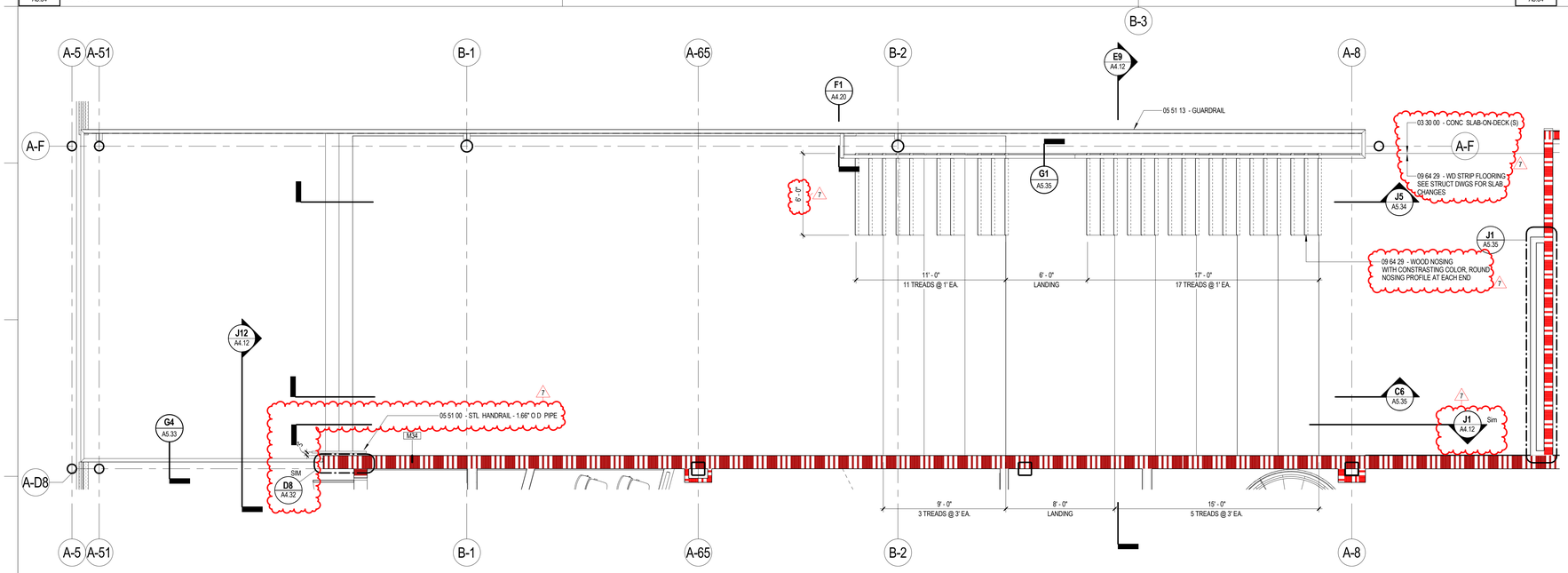

G1 A5.34 LEVEL 2 - AGORA STAIR
1/4" = 1'-0"

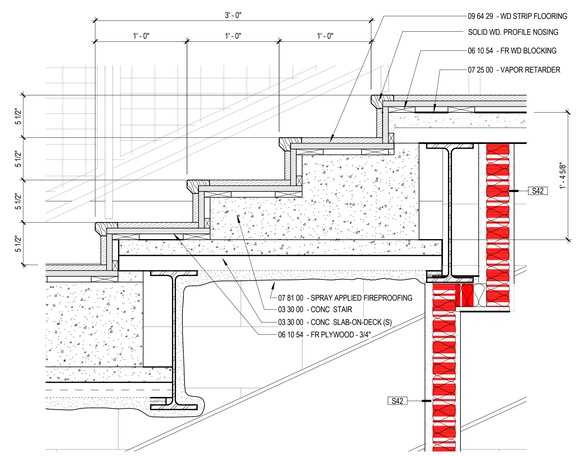

J1 A5.34 TYP. MONOLITHIC RISER WITH WALKING STAIRS at AGORA
1 1/2" = 1'-0"

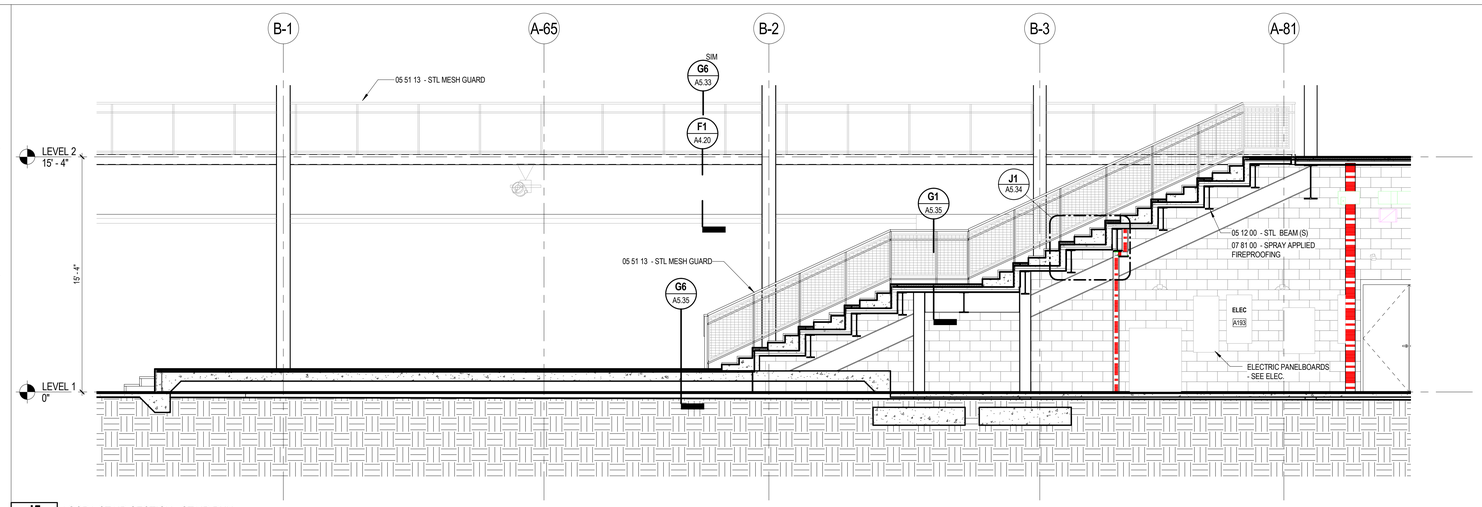

J5 A5.34 AGORA STAIR SECTION - STAIR RUN
1/4" = 1'-0"

LAVALLEE BRENSINGER
ARCHITECTS
Boston | Manchester | Portland
155 Dow Street, Suite 400, Manchester, NH 03101
603.622.5450
305 Commercial Street, Portland, ME 04101
207.558.7200
www.LBPA.com

Sanford School Department and State of Maine Department of Education

SANFORD HIGH SCHOOL and TECHNICAL CENTER

SANFORD, ME 04073

NO.	DESCRIPTION	DATE
7	Addendum 7	03/31/16

CONTENT:
AGORA STAIR PLANS, SECTIONS AND DETAILS

DRAWN BY:	KRL
PROJECT NO:	12-067-00
DATE:	02/11/2016
REVISED:	
SCALE:	As indicated

A5.34

Project Phase
BID DOCUMENTS

COPYRIGHT © 2016 BY LAVALLEE/BRENSINGER PROFESSIONAL ASSOCIATION. ALL RIGHTS RESERVED. NO REPRODUCTION WITHOUT PERMISSION.

FOR ADDITIONAL INFORMATION, REFER TO PROJECT MANUAL.

3/30/2016 4:48:36 PM C:\Projects\12-067-00_Sanford Tech Central_v16_JulieSpence.rvt

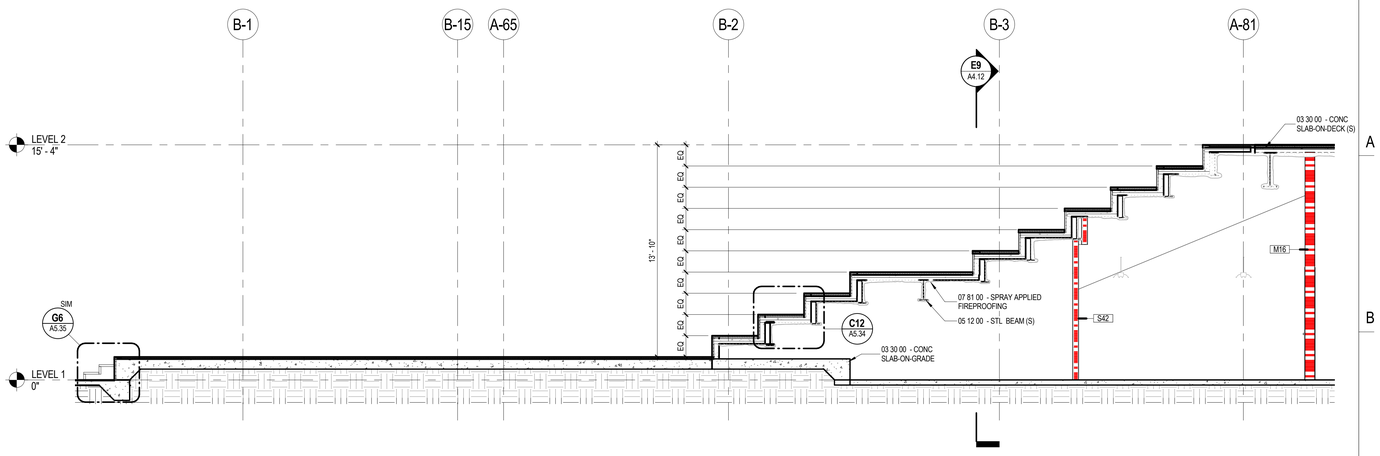

C6 A5.35 AGORA STAIR SECTION - MONOLITHIC STAIRS
1/4" = 1'-0"

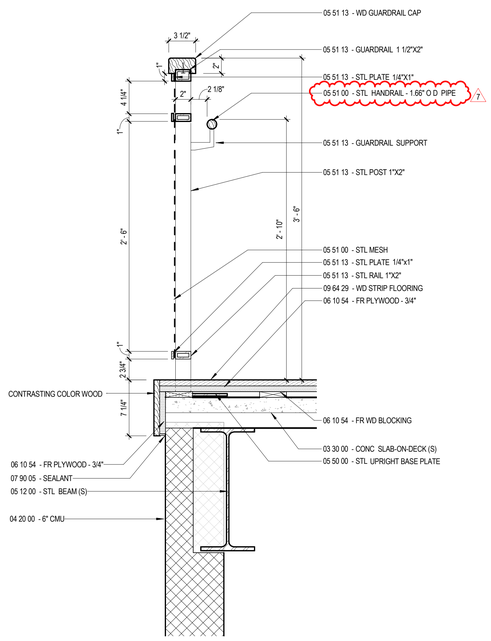

G1 A5.35 AGORA RAILING and STAIR EDGE DETAIL
1 1/2" = 1'-0"

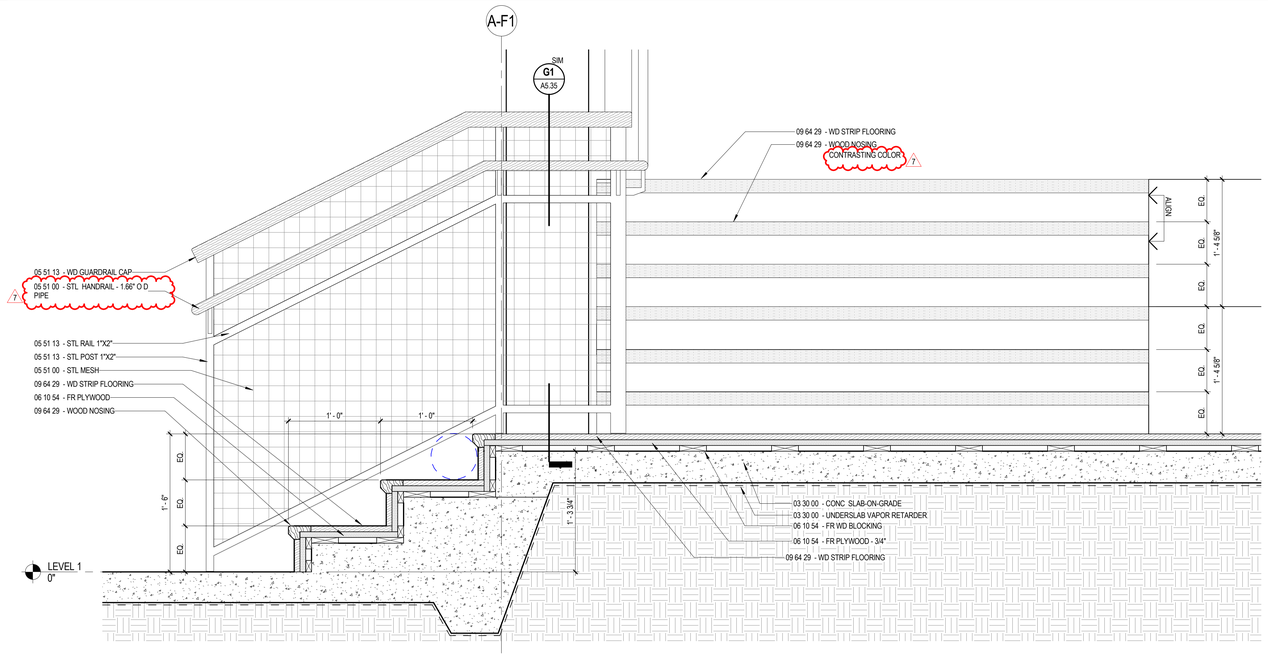

G6 A5.35 AGORA STAIR BASE SECTION DETAIL
1 1/2" = 1'-0"

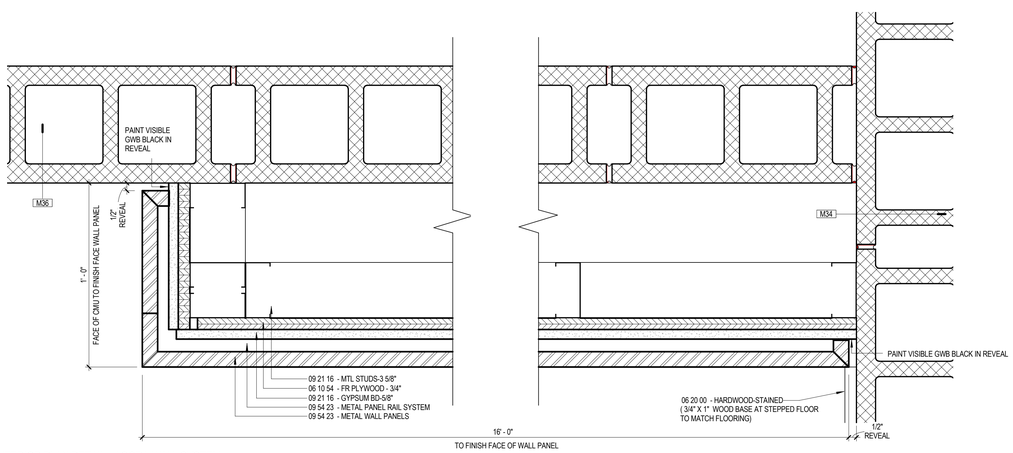

J1 A5.35 INTERIOR PLAN DETAIL - AGORA WALL SYSTEM
3" = 1'-0"

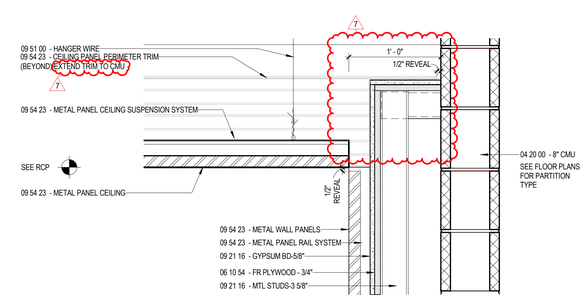

J8 A5.35 AGORA WALL TO CEILING TRANSITION
1 1/2" = 1'-0"

LAVALLEE BRENSINGER ARCHITECTS
Boston | Manchester | Portland
155 Dow Street, Suite 400, Manchester, NH 03101
603.622.5450
305 Commercial Street, Portland, ME 04101
207.558.7200
www.LBPA.com

Sanford School Department and State of Maine Department of Education

SANFORD HIGH SCHOOL and TECHNICAL CENTER

SANFORD, ME 04073

NO.	DESCRIPTION	DATE
7	Addendum 7	03/31/16

CONTENT:
AGORA STAIR PLANS, SECTIONS AND DETAILS

DRAWN BY:	KRL
PROJECT NO:	12-067-00
DATE:	02/11/2016
REVISED:	
SCALE:	As indicated

A5.35

Project Phase
BID DOCUMENTS

COPYRIGHT © 2016 BY LAVALLEE/BRENSINGER PROFESSIONAL ASSOCIATION. ALL RIGHTS RESERVED. NO REPRODUCTION WITHOUT PERMISSION.

FOR ADDITIONAL INFORMATION, REFER TO PROJECT MANUAL.

3/30/2016 4:47:49 PM C:\Projects\12-067-00_Sanford Tech Central_v16_JuliaSpence.rvt

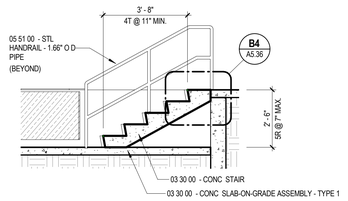

B1 A5.36 — AUDITORIUM STAGE STAIR SECTION
3/8" = 1'-0"

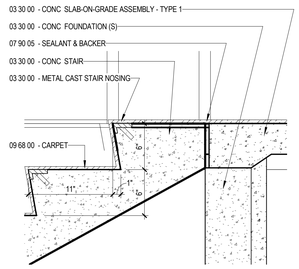

B4 A5.36 — CONCRETE STAIR DETAIL AT STAGE
1 1/2" = 1'-0"

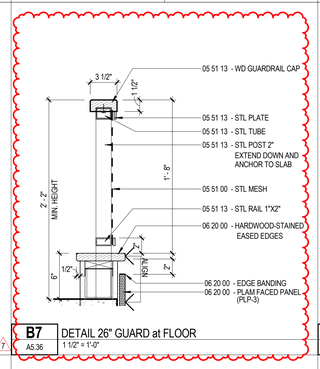

B7 A5.36 — DETAIL 26" GUARD at FLOOR
1 1/2" = 1'-0"

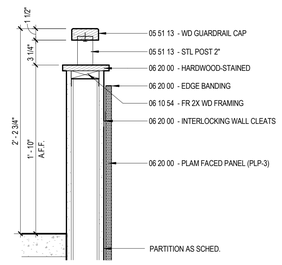

B9 A5.36 — DETAIL 26" GUARD at PARTITION
1 1/2" = 1'-0"

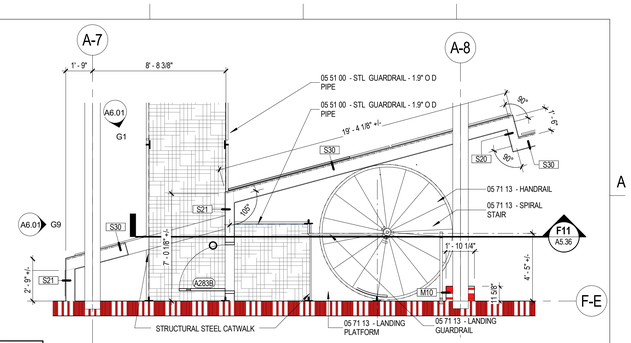

B11 A5.36 — SPIRAL STAIR AT CATWALK
1/4" = 1'-0"

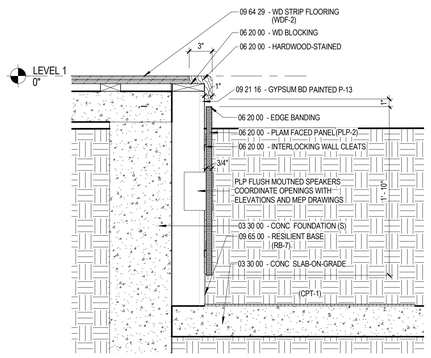

E1 A5.36 — PROSCENIUM FRONT DETAIL
1 1/2" = 1'-0"

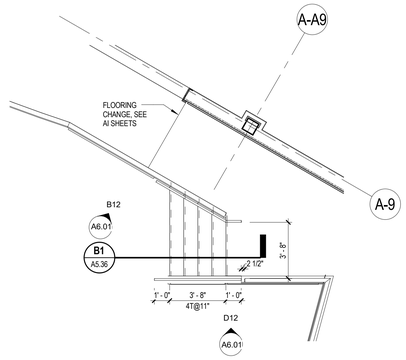

E4 A5.36 — AUDITORIUM STAGE STAIRS
1/4" = 1'-0"

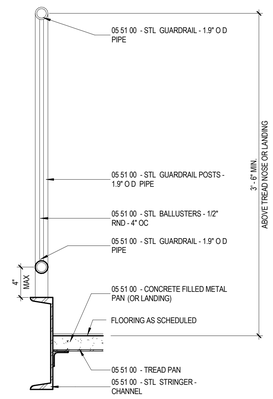

E9 A5.36 — DETAIL at GUARDRAIL & HANDRAIL (CATWALK)
1 1/2" = 1'-0"

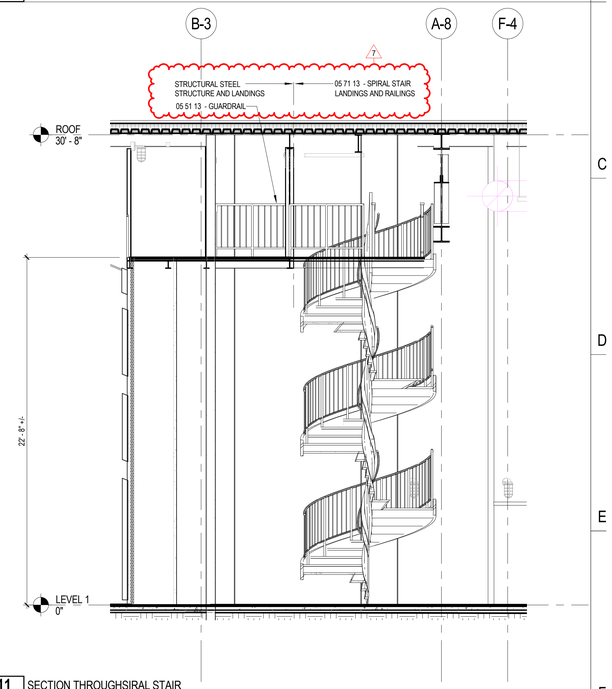

F11 A5.36 — SECTION THROUGHSIRAL STAIR
1/4" = 1'-0"

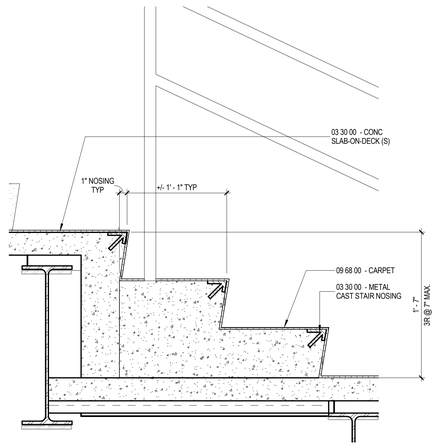

H7 A5.36 — Section 107 - Callout 1
1 1/2" = 1'-0"

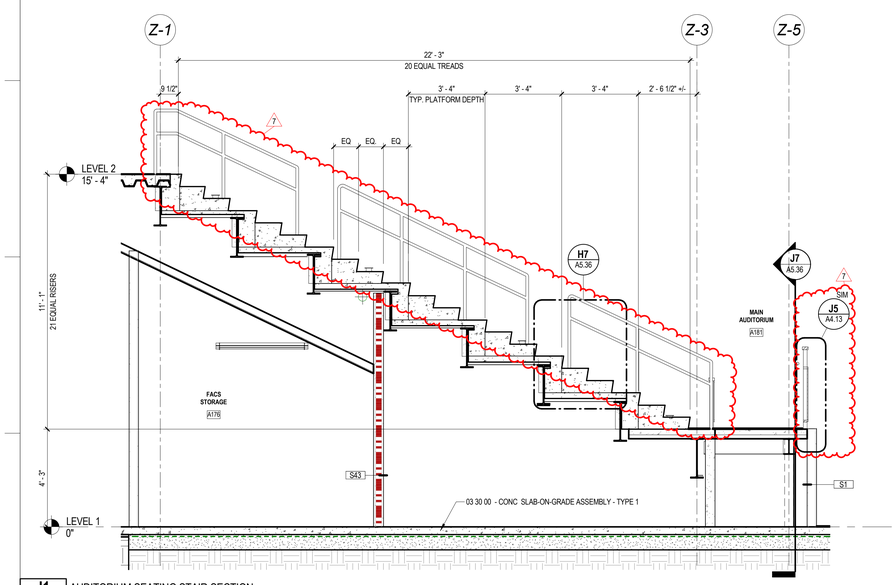

J1 A5.36 — AUDITORIUM SEATING STAIR SECTION
3/8" = 1'-0"

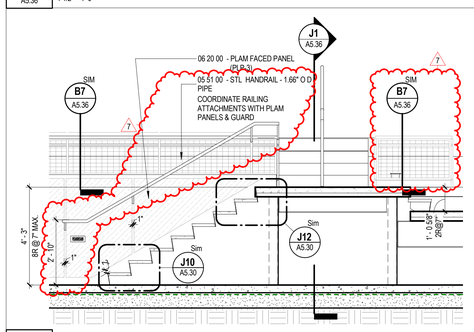

J7 A5.36 — AUDITORIUM STAIR SECTION
3/8" = 1'-0"

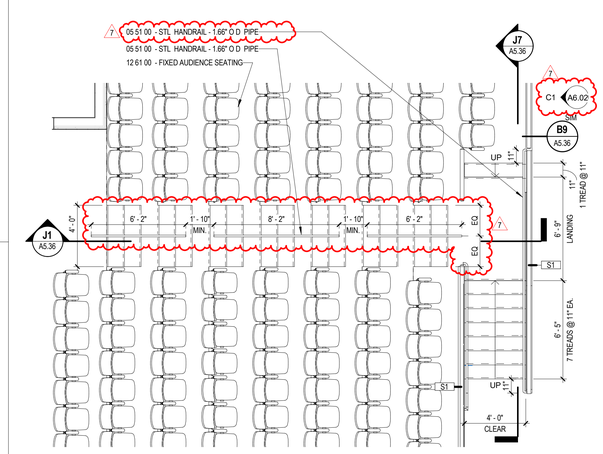

J11 A5.36 — AUDITORIUM STAIRS
1/4" = 1'-0"

LAVALLEE BRENSINGER ARCHITECTS
Boston | Manchester | Portland
155 Dow Street, Suite 400, Manchester, NH 03101
603.622.5450
305 Commercial Street, Portland, ME 04101
207.558.7200
www.LBPA.com

Sanford School Department and State of Maine Department of Education

SANFORD HIGH SCHOOL and TECHNICAL CENTER

SANFORD, ME 04073

NO.	DESCRIPTION	DATE
7	Addendum 7	03/31/16

CONTENT:
AUDITORIUM STAIR PLANS SECTION AND DETAILS

DRAWN BY:	KRL
PROJECT NO:	12-067-00
DATE:	02/11/2016
REVISED:	
SCALE:	As indicated

A5.36

Project Phase
BID DOCUMENTS

COPYRIGHT © 2016 BY LAVALLEE/BRENSINGER PROFESSIONAL ASSOCIATION. ALL RIGHTS RESERVED. NO REPRODUCTION WITHOUT PERMISSION.

FOR ADDITIONAL INFORMATION, REFER TO PROJECT MANUAL.

3/30/2016 4:56:45 PM C:\Projects\12-067-00_Sanford Tech Central_v16_JuliaSpence.rvt

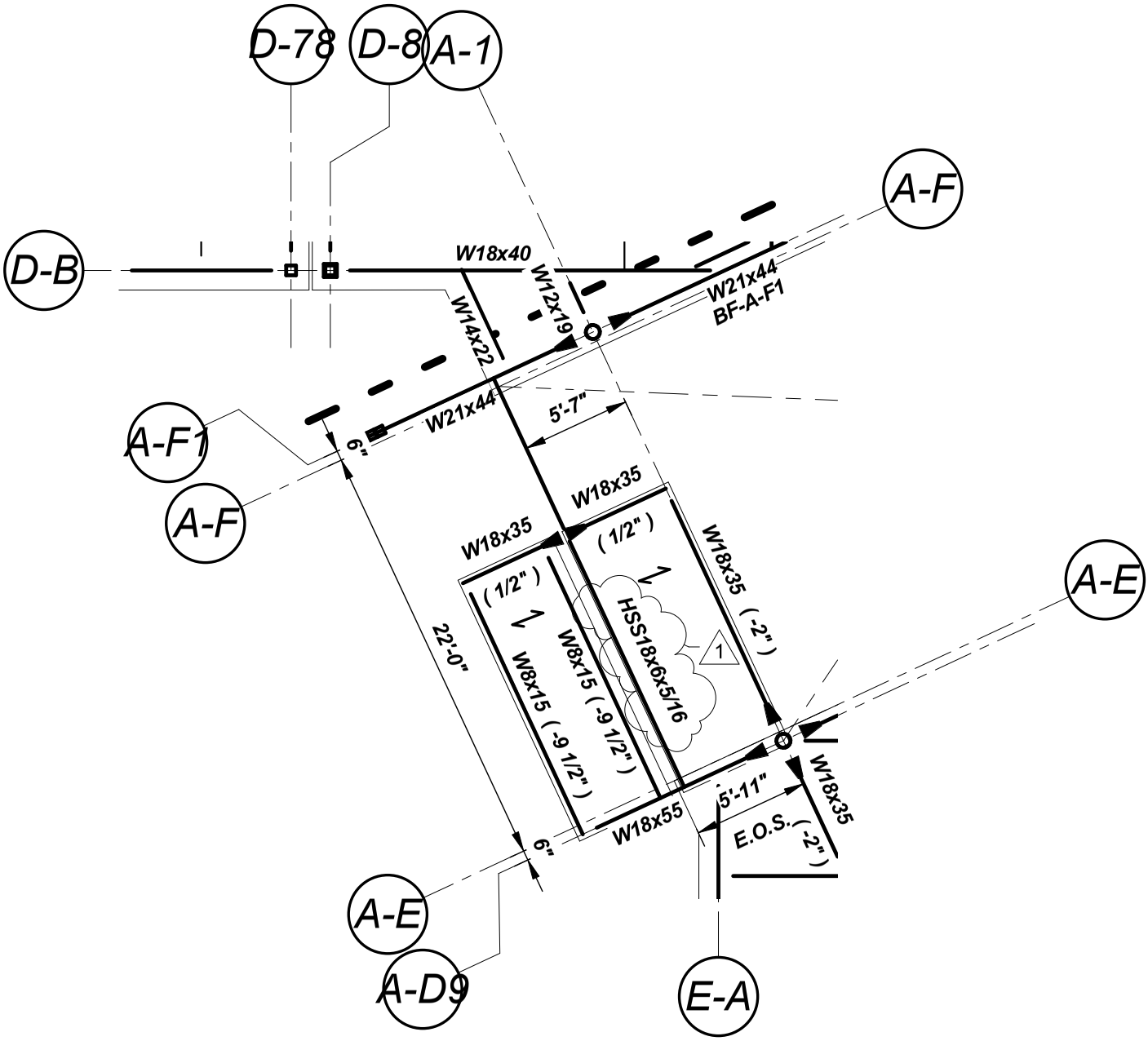

ENTRY AT AREA A1 AT LEVEL 2

1/8"=1'-0"

REF DWG S1.11
ADDENDUM 7 - 03/31/16

BECKER
STRUCTURAL ENGINEERS
75 York Street, Portland, Maine 04101
207.879.1838 ■ beckerstructural.com

Designed	MDP
Drawn	MSK
Checked	EAR
Scale	NOTED
Date	03/31/2016

SANFORD HIGH SCHOOL AND TECHNICAL CENTER
SANFORD, ME 04073

Becker Job Number
3261

SKS-02

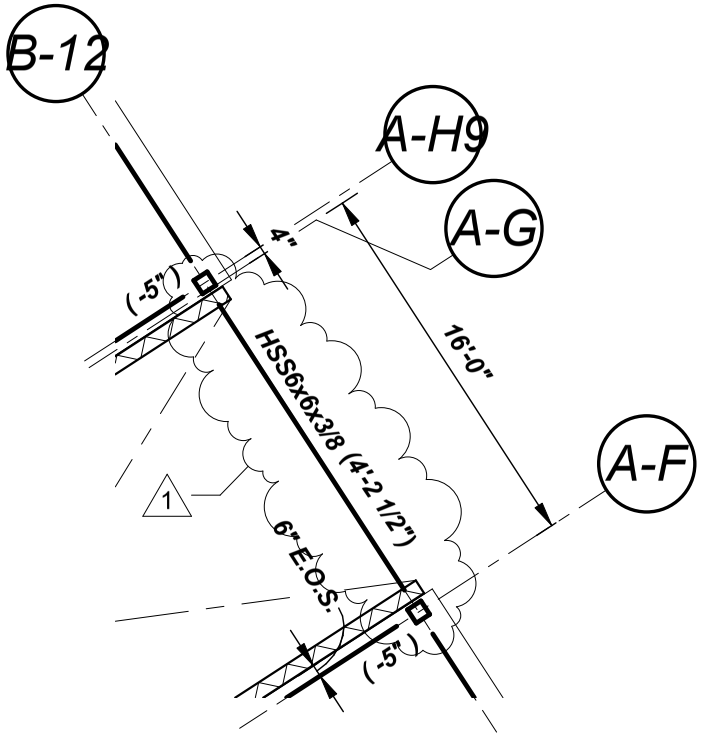

ENTRY AT AREA B AT LEVEL 2

1/8"=1'-0"

REF DWG S1.14
ADDENDUM 7 - 03/31/16

BECKER
STRUCTURAL ENGINEERS
75 York Street, Portland, Maine 04101
207.879.1838 ■ beckerstructural.com

Designed	MDP
Drawn	MSK
Checked	EAR
Scale	NOTED
Date	03/31/16

SANFORD HIGH SCHOOL
AND TECHNICAL CENTER
SANFORD, ME 04073

Becker Job Number
3261

SKS-03

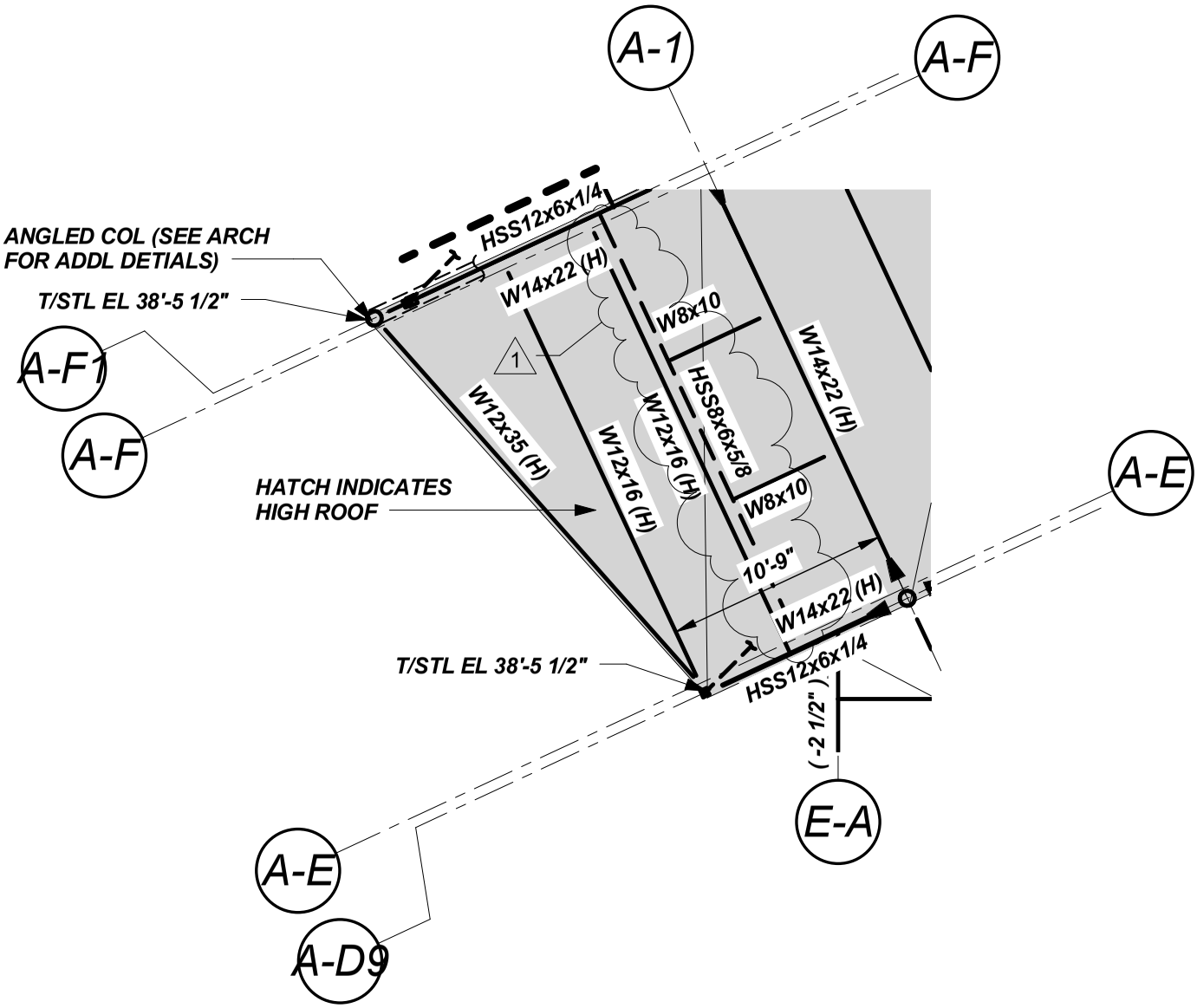

ENTRY AT AREA A1 AT ROOF

1/8"=1'-0"

REF DWG S1.21
ADDENDUM 7 - 03/31/16

BECKER
STRUCTURAL ENGINEERS
75 York Street, Portland, Maine 04101
207.879.1838 ■ beckerstructural.com

Designed	MDP
Drawn	MSK
Checked	EAR
Scale	NOTED
Date	03/31/16

SANFORD HIGH SCHOOL
AND TECHNICAL CENTER
SANFORD, ME 04073

Becker Job Number
3261

SKS-04

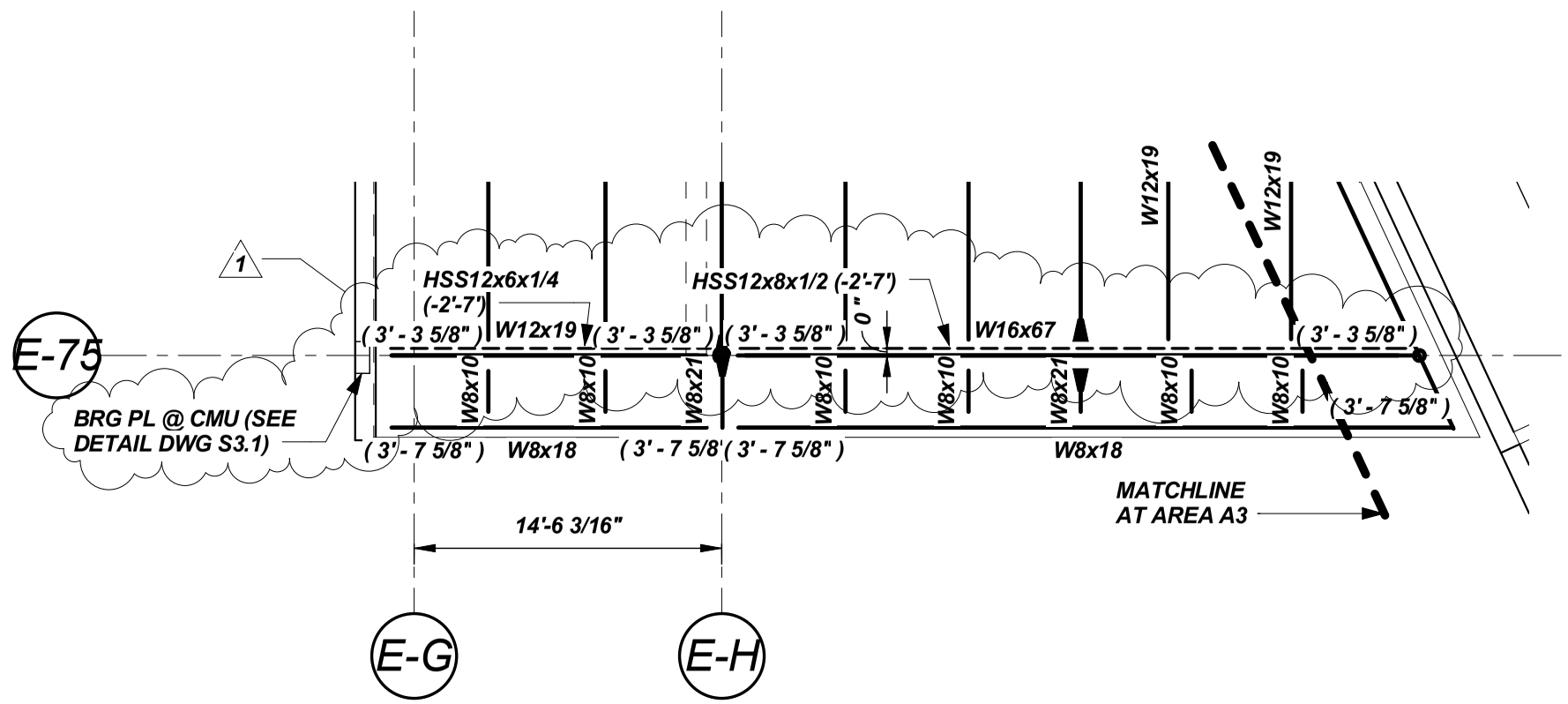

ENTRY AT AREA A1 AT ROOF

1/8"=1'-0"

THIS DRAWING IS AN INSTRUMENT OF SERVICE AND SHALL REMAIN THE PROPERTY OF BECKER STRUCTURAL ENGINEERS INC. IT SHALL NOT BE REPRODUCED, COPIED, LENT OR DISPOSED OF DIRECTLY OR INDIRECTLY NOR USED FOR ANY PURPOSE OTHER THAN FOR WHICH IT IS SPECIFICALLY FURNISHED AND MUST BE RETURNED TO BECKER STRUCTURAL ENGINEERS INC. ON COMPLETION OF WORK, IF REQUESTED.

REF DWG S1.21
ADDENDUM 7 - 03/31/16

BECKER
STRUCTURAL ENGINEERS
75 York Street, Portland, Maine 04101
207.879.1838 ▪ beckerstructural.com

SANFORD HIGH SCHOOL AND TECHNICAL CENTER
SANFORD, ME 04073

Designed MDP	Scale AS NOTED
Drawn MSK	Date 03/31/16
Checked EAR	Becker Job Number 3261

SKS-05

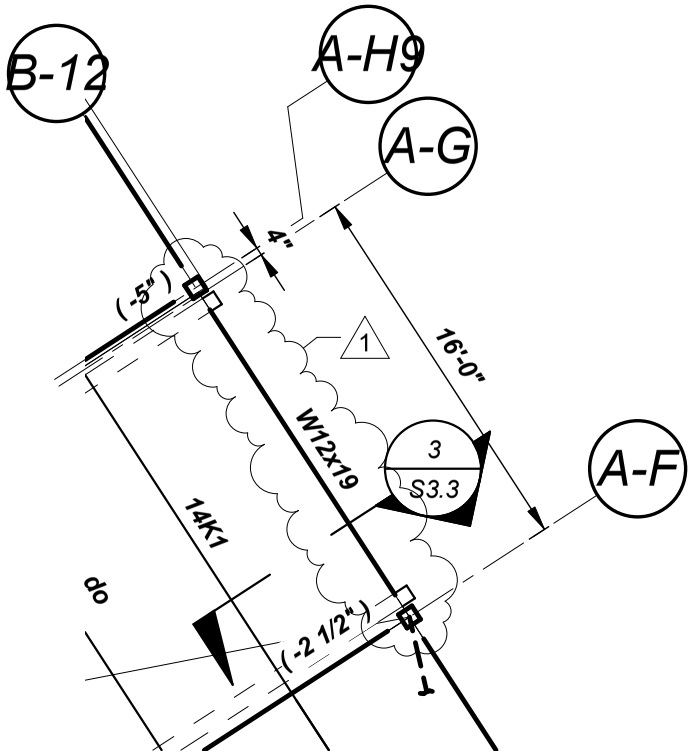

ENTRY AT AREA B AT ROOF

1/8"=1'-0"

REF DWG S1.24
ADDENDUM 7 - 03/31/16

BECKER
STRUCTURAL ENGINEERS
75 York Street, Portland, Maine 04101
207.879.1838 ■ beckerstructural.com

Designed	MDP
Drawn	MSK
Checked	EAR
Scale	NOTED
Date	03/31/16

SANFORD HIGH SCHOOL AND TECHNICAL CENTER
SANFORD, ME 04073

Becker Job Number
3261

SKS-06

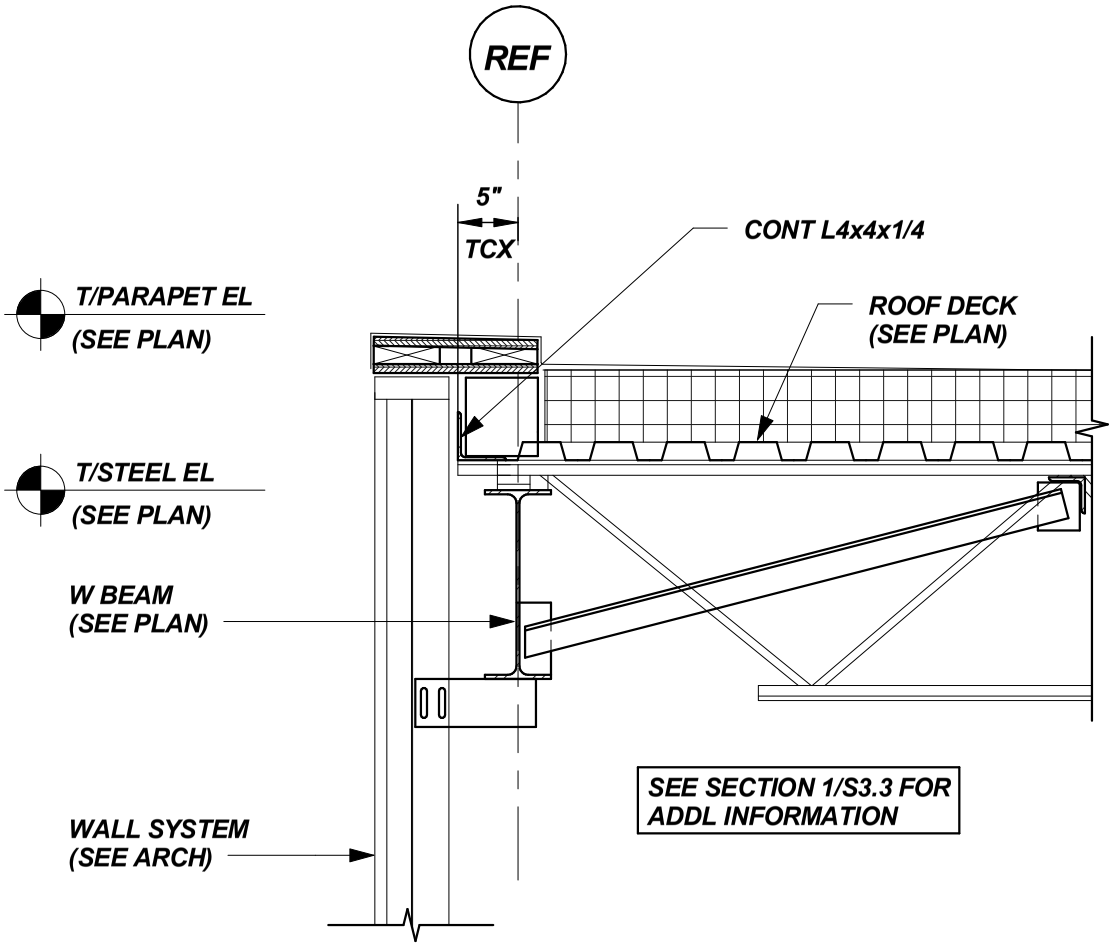

SECTION 1A

3/4" = 1'-0"

SEE PLANS

ADD SECTION 1A TO DRAWING S3.3-THIS SECTION IS SHOWN ABOVE

PROVIDE SECTION 1A ON DRAWING S3.3 AT THE ROOF LEVEL IN THE FOLLOWING LOCATIONS:
- AT THE CURTAIN WALL ALONG CE LINE FROM C6 TO C7
- AT THE CURTAIN WALL ALONG DE LINE FROM D5.8 TO D6.4
- AT THE CURTAIN WALL ALONG EA LINE FROM E3 TO E4

IN ADDITION, PROVIDE SECTION 3 ON S3.3 AT THE ROOF LEVEL IN THE FOLLOWING LOCATIONS:
- AT THE CURTAIN WALL ALONG B12 LINE FROM A-H9 TO AF
- AT THE CURTAIN WALL ALONG E1 LINE FROM EB1 TO EC

REF DWG S3.3

ADDENDUM 7 - 03/31/16

BECKER STRUCTURAL ENGINEERS
75 York Street, Portland, Maine 04101
207.879.1838 ■ beckerstructural.com

Designed	MDP
Drawn	MSK
Checked	EAR
Scale	NOTED
Date	03/31/16

SANFORD HIGH SCHOOL
AND TECHNICAL CENTER
SANFORD, ME 04073

Becker Job Number 3261

SKS-07